SONY®

VIDEOCASSETTE RECORDER

SVO-5800P

VIDEOCASSETTE PLAYER

SVP-5600P

SERVICE MANUAL

Vol.2 1st Edition

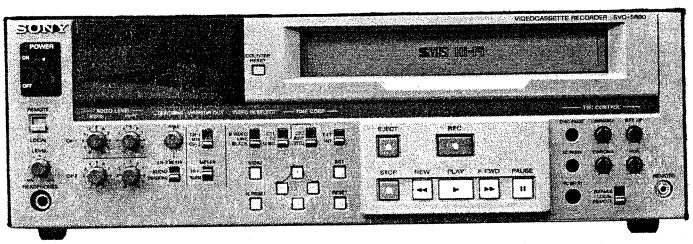

S VHS

VHS
PAL

Manual Structure

This manual is the Service Manual Vol. 2 of the videocassette recorder SVO-5800/5800P and videocassette player SVP-5600/5600P.
This manual contains the block diagrams, board layouts, schematic diagrams, semiconductor pin assingments and parts lists.

Contents

The sections covered in the manual are summarized below to give you a general understanding of the manual.

Section 13 BLOCK DIAGRAMS
Describes the overall block diagram and block diagrams for every circuit block.

Section 14 SCHEMATIC DIAGRAMS AND BOARD LAYOUTS
Describes the schematic diagrams and board layouts for every circuit board.

Section 15 SEMICONDUCTOR PIN ASSIGNMENTS
Describes the outlines, system block diagrams and pin assignments of semiconductors used in this equipment.

Section 16 SPARE PARTS AND OPTIONAL FIXTURES
Describes the exploded views, electrical parts list, packing materials & accessories and optional fixtures.

Operating Instructions and Service manuals

In addition to this Service Manual Vol. 2, the folowing Operating Instructions and Service manual are provided.

· Operating Instructions (Supplied with equipment)
Part No. 3-759-424-21 (English/French), 3-759-424-41 (German/Italian)
Describes how to operate this equipment.

· Service Manual Vol.1 (Not supplied with equipment)
Part No. 9-977-596-11 (SVO-5800/SVP-5600)
9-977-597-11 (SVO-5800P/SVP-5600P)
Describes the maintenance information of this equipment, and the servicing information necessary for parts replacement and adjustments.

· SVBK-170/170P Service Manual (Not supplied with equipment)
Part No. 9-977-593-01 (SVBK-170)
9-977-594-01 (SVBK-170P)
Describes the servicing information of the component output board SVBK-170/170P (option board).

TABLE OF CONTENTS

Volume-1

1. OPERATING INSTRUCTION

2. SERVICE OVERVIEW

3. PERIODIC INSPECTION AND MAINTENANCE

4. REPLACEMENT OF MACHANICAL PARTS

5. TORQUE AND TAPE TENSION ALIGNMENT

6. TAPE PATH ALIGNMENT

7. ELECTRICAL ALIGNMENT OVERVIEW

8. SYSTEM CONTROL ALIGNMENT

9. SERVO ALIGNMENT

10. AUDIO ALIGNMENT

11. VIDEO ALIGNMENT

12. ELECTRICAL ALIGNMENT AFTER REPLACEMENT BOARDS

13. BLOCK DIAGRAMS

OVERALL 13-1
VIDEO
VIDEO & AFM REC/PB HEAD AMP ..13-2
VIDEO MOD/DEMOD & CHROMA PROCESS 13-4
TIME BASE CORRECTOR & DIGITAL NOISE REDUCER 13-6
VIDEO PROCESS & OUTPUT AMP ..13-8
AUDIO
AFM PROCESS/NORMAL AUDIO PROCESS /LTC REC & PB AMP 13-10
SERVO & SYSTEM CONTROL
SERVO & SYSTEM CONTROL 13-12

14. SCHEMATIC DIAGRAMS AND BOARD LAYOUTS

CIRCUIT FUNCTION OF THE PRINTED CIRCUIT BOARD 14-1

VIDEO
RP-74 14-2
VO-47, DUS-808, DUS-809 .....14-4 (P)
TBC-30, DUS-812 14-14
VIDEO/AUDIO
VA-148, AH-40, AH-28 .....14-26 (P)
SERVO & SYSTEM CONTROL
SS-58, AH-40, AH-28 14-36
DR-265 14-46
DR-266 14-50
KY-303, RM-145, HP-64 14-56
PTC-73A, CN-1053, CM-14 14-74

HN-198A
SW-668
SW-673 14-75
SE-230
LE-131

CONNECTOR
CP-246 14-60
CP-247 14-62
MOTHER BOARD
MB-535 14-64
FRAME
FRAME (1/2)
SE-224 14-76
LD-35
FRAME (2/2)
AH-40 14-78
AH-28

15. SEMICONDUCTOR PIN ASSIGNMENTS

SEMICONDUCTOR INDEX 15-1
DIODE 15-3
TRANSISTOR 15-4
IC 15-5

16. SPARE PARTS AND OPTIONAL FIXTURES

16-1. Notes on Spare Parts 16-1
16-2. Exploded Views 16-2
Ornamental Panel Block 16-3
Rear Panel Block 16-4
Printed Circuit Boards 16-5
Cassette Compartment Block 16-6
Head Drum and Tape Run Blocks 16-7
Reel Table and Pinch Roller Blocks 16-8
Mechanism Control Block 16-9
16-3. Electrical Parts List 16-11
16-4. Packing Materials and Accessories 16-86
16-5. Optional Fixtures 16-87

SECTION 13
BLOCK DIAGRAMS

OVERALL

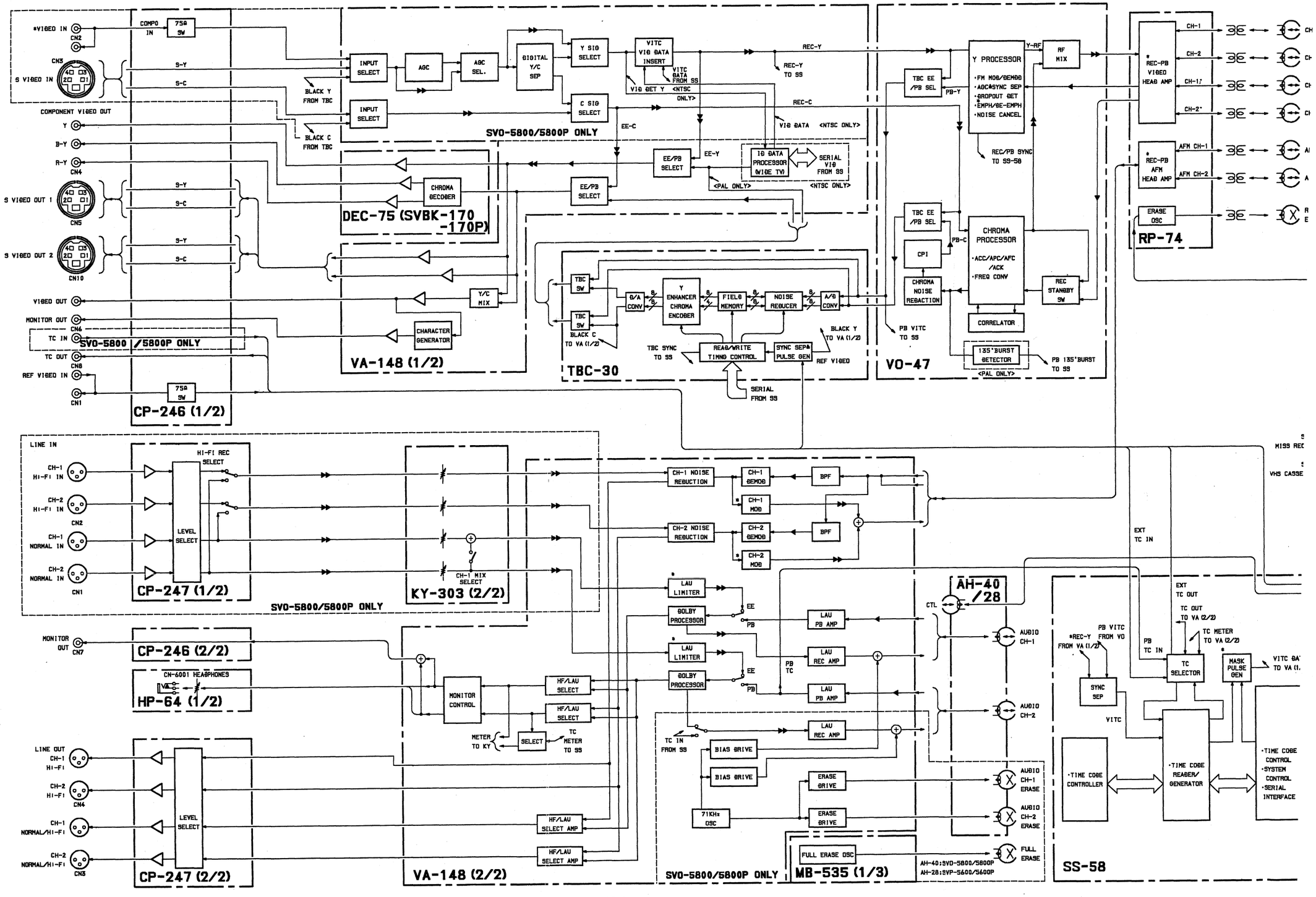

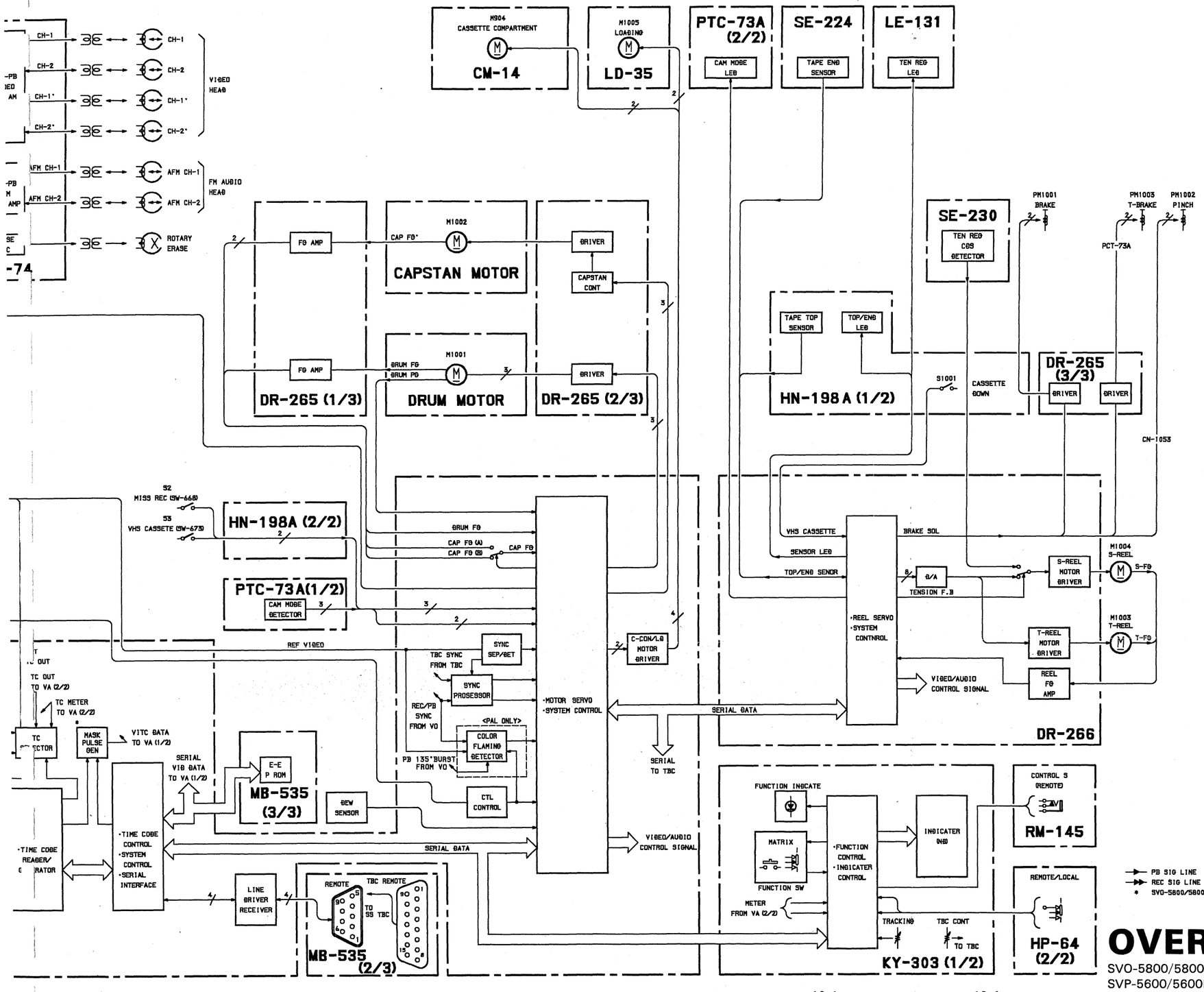

OVERALL

SVO-5800/5800P (1)
SVP-5600/5600P (1)

VIDEO & AFM REC/PB HEAD AMP

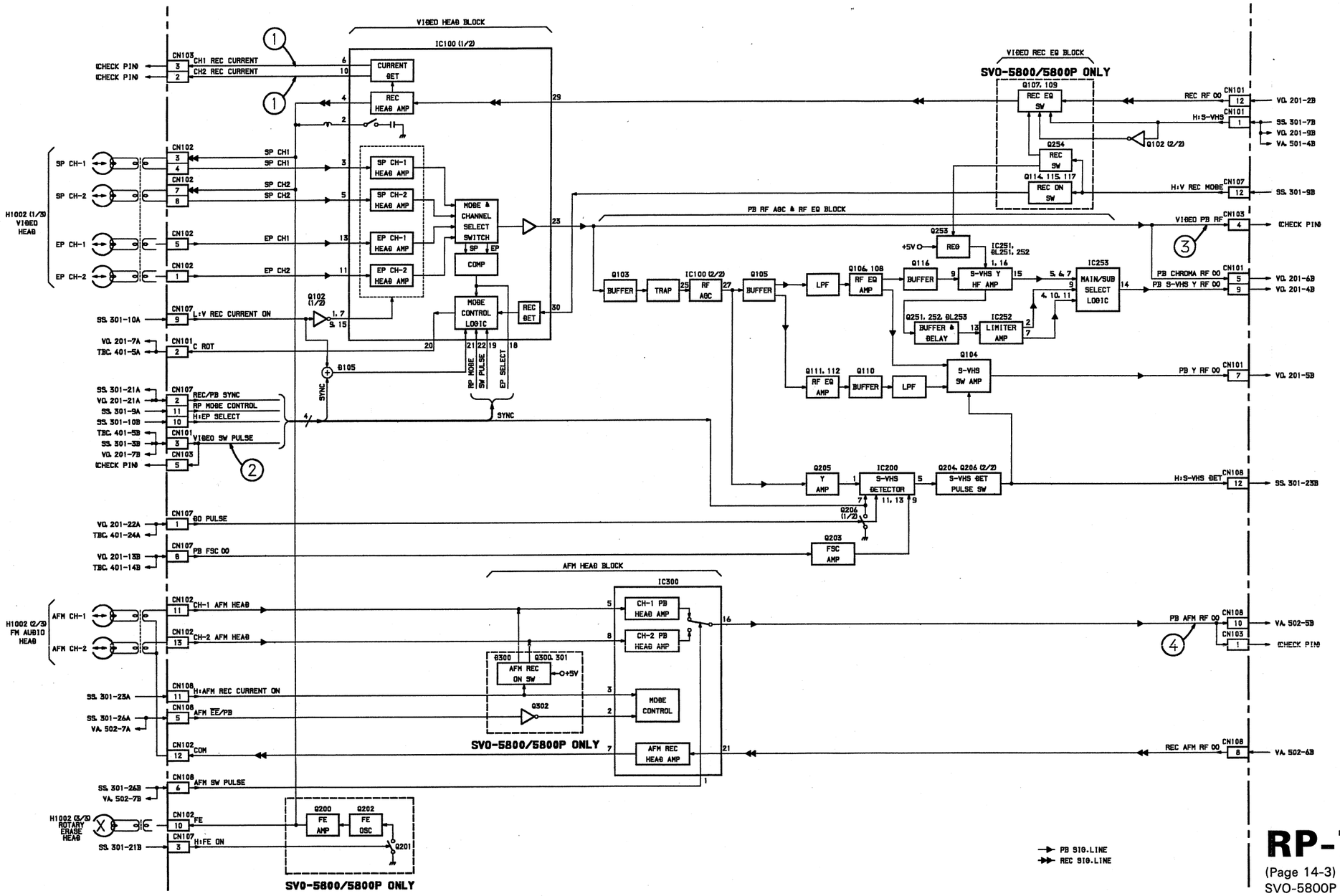

RP-74

(Page 14-3)
SVO-5800P (1)
SVP-5600P (1)

<PAL>
① CN103-2, 3 pin

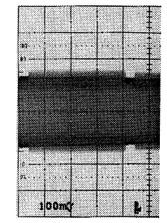

② CN103-5 pin (

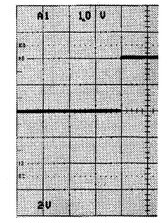

③ CN103-4 pin (

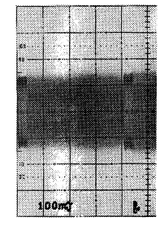

④ CN103-1 pin (

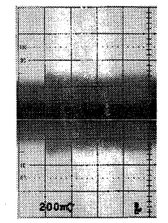

Measurement Co
S-VIDEO IN : 75 9
REC (S-VHS) mod
PB (S-VHS) mode
PB mode : KRV-3!

〈PAL〉

① CN103-2, 3 pin (D-1) REC mode

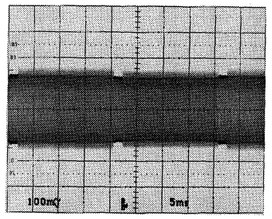

② CN103-5 pin (D-1)REC/PB mode

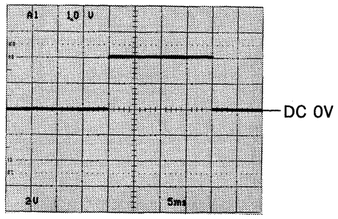

③ CN103-4 pin (D-1) PB mode

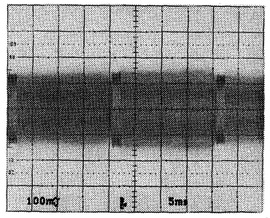

④ CN103-1 pin (D-1) PB mode

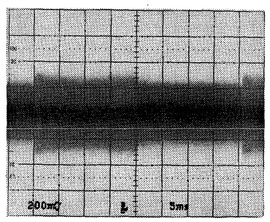

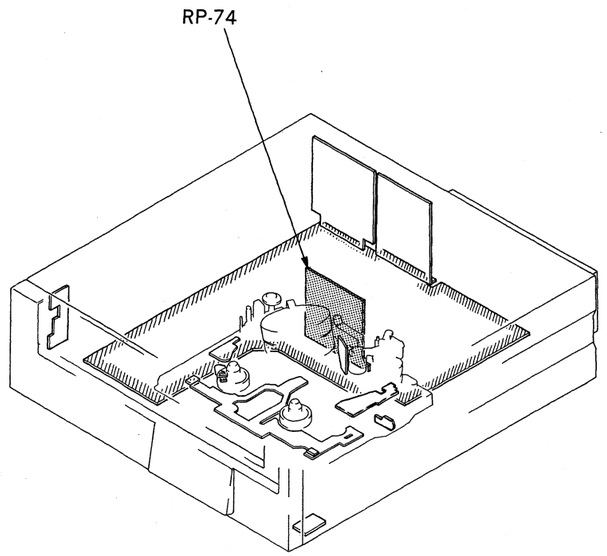

Measurement Condition

S-VIDEO IN : 75 % COLOR BARS
REC (S-VHS) mode
PB (S-VHS) mode : KRV-45HPS
PB mode : KRV-35PF (Hi-Fi)

<PAL>
① CN201-17B pin STOP (E-E) mode

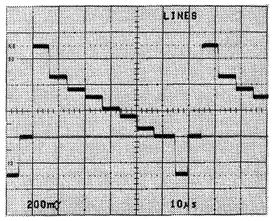

② TP201 (M-2) REC (S-VHS) mode

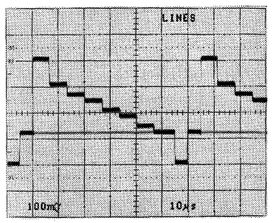

TP201 (M-2) PB (S-VHS) mode

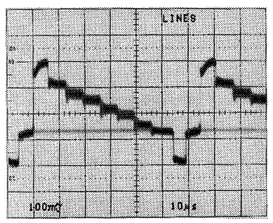

③ TP211 (M-2) REC (S-VHS) mode

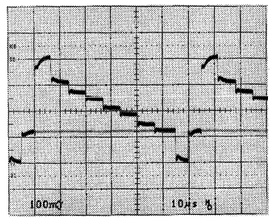

TP211 (M-2) PB (S-VHS) mode

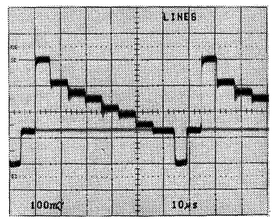

④ TP11 (M-3) REC (S-VHS) mode

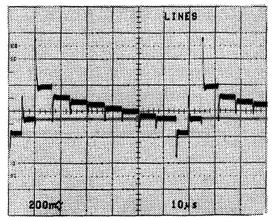

TP11 (M-3) REC (N-VHS) mode

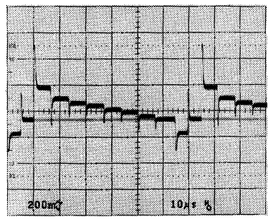

⑤ TP12 (R-4) STOP (E-E) mode

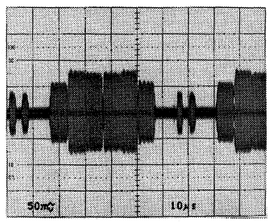

⑥ CN201-2B pin REC (S-VHS) mode

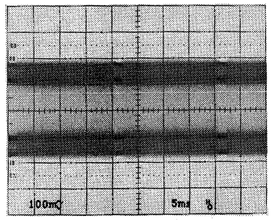

CN201-2B pin REC (N-VHS) mode

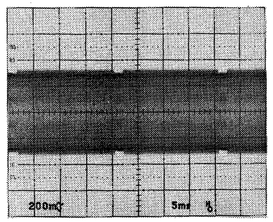

⑦ CN201-4B pin PB (S-VHS) mode
CN201-7B pin (TRIG)

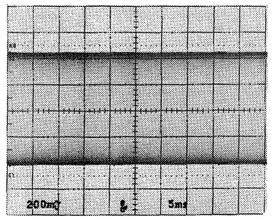

⑧ CN201-5B pin PB (N-VHS) mode
CN201-7B pin (TRIG)

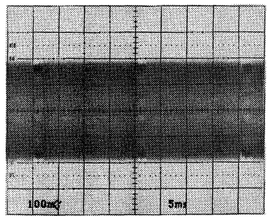

⑨ CN202-11B pin PB (S-VHS) mode

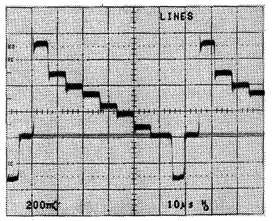

⑩ CN201-21A pin REC/PB mode

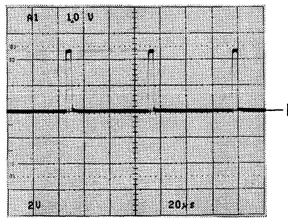

DC 0V

⑪ CN201-16B pin REC/STOP (E-E) mode

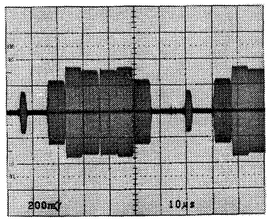

⑫ TP403 (H-3) REC/STOP (E-E) mode

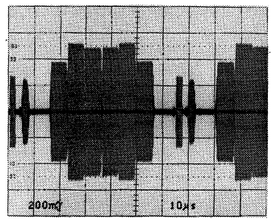

⑬ TP401 (K-1) REC/STOP (E-E) mode

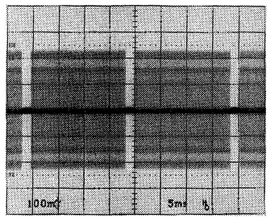

⑭ TP404 (J-3) REC/STOP (E-E) mode

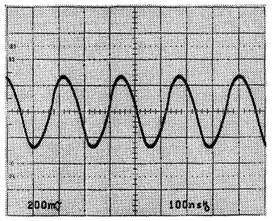

⑮ CN201-14B pin REC/STOP (E-E) mode

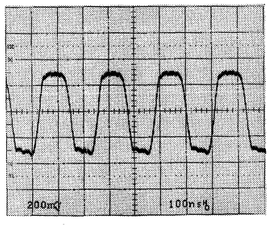

⑯ CN201-9A pin REC/STOP (E-E) mode

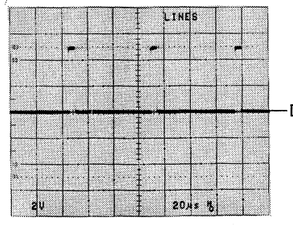

DC 0V

⑰ TP402 (K-3) REC/STOP (E-E) mode

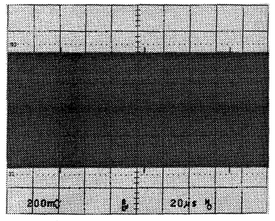

⑱ CN201-6B pin PB mode

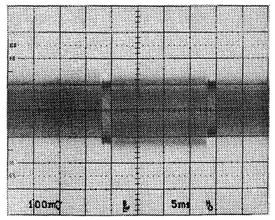

⑲ TP701 (E-3) PB mode

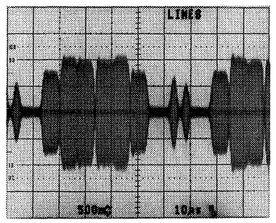

⑳ TP700 (D-1) PB mode

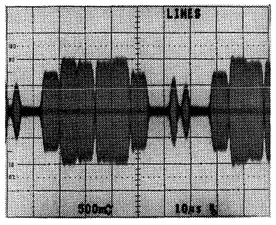

㉑ TP901 (C-2) PB mode

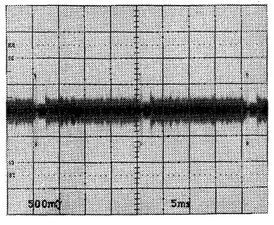

㉒ CN202-12B pin PB mode

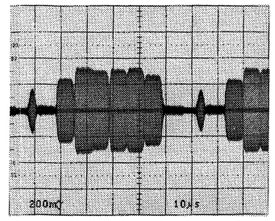

㉓ CN201-13B pin PB mode

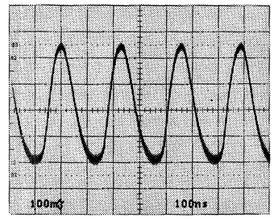

㉔ TP507 (F-1) PB mode

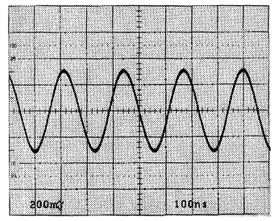

㉕ TP508 (F-1) PB mode

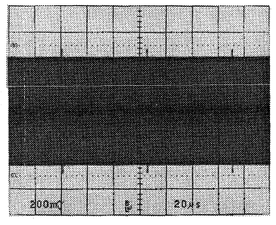

㉖ CN202-23B pin PB (S-VHS) mode

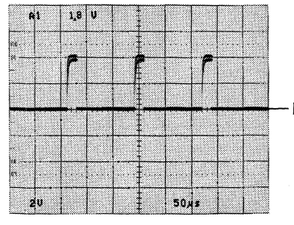

DC 0V

Measurement Condition

S-VIDEO IN : 75 % COLOR BARS
STOP (E-E) mode
REC (S-VHS) mode
REC (N-VHS) mode
PB (S-VHS) mode : KRV-45HPS
PB (N-VHS) mode : KRV-44PS

VIDEO MOD/DEMOD & CHROMA PROCESS

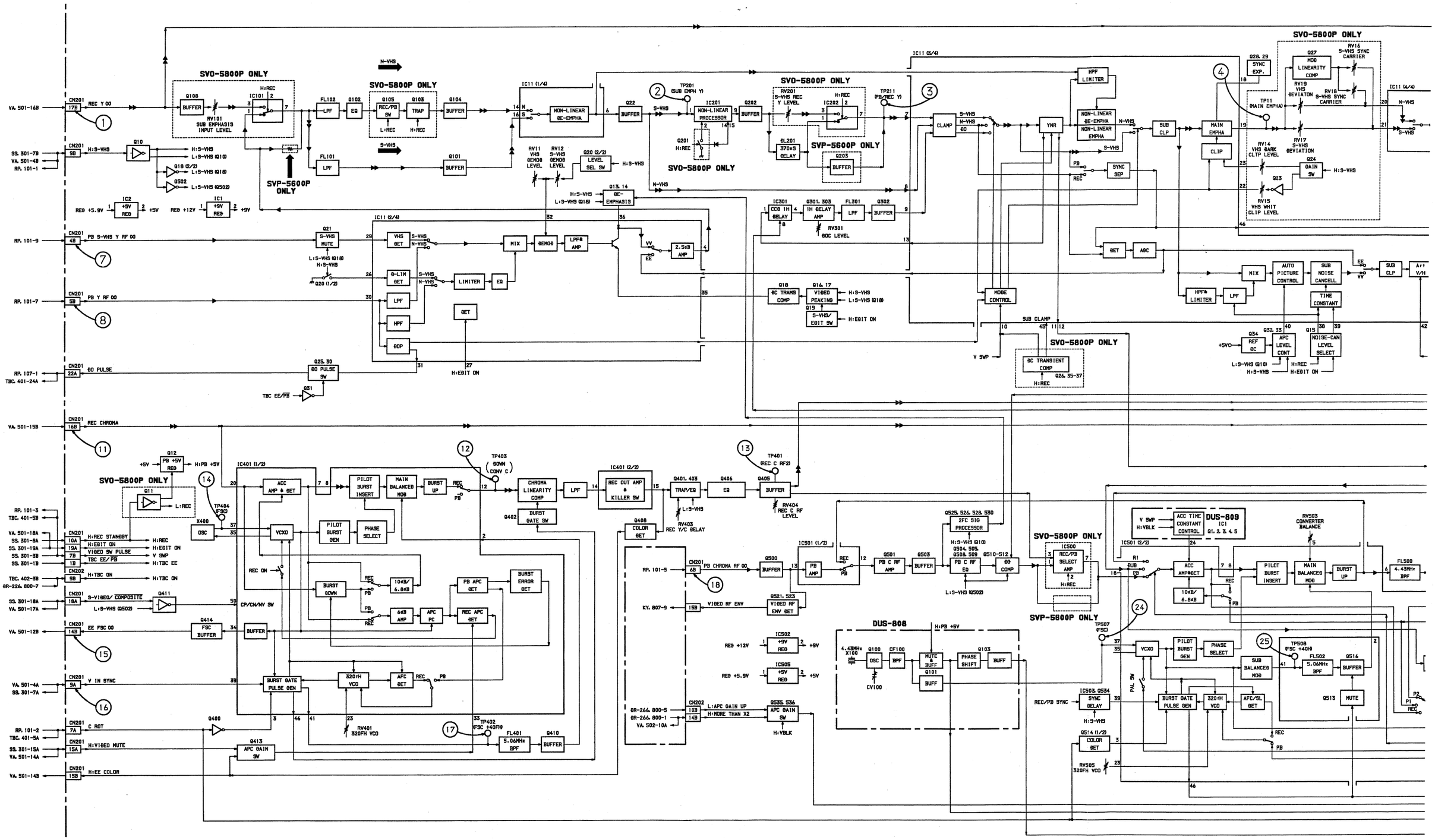
SVO-5800P ONLY
SVP-5600P ONLY
DUS-809
DUS-808
REC Y 00
PB S-VHS Y RF 00
PB Y RF 00
80 PULSE
REC CHROMA
V IN SYNC
C ROT
EE FSC 00
PB CHROMA RF 00
REC/PB SYNC
NON-LINEAR BE-EMPHA
NON-LINEAR DE-EMPHA
NON-LINEAR EMPHA
MAIN EMPHA
CLIP
SUB CLP
SUB CLAMP
CLAMP
MODE CONTROL
AUTO PICTURE CONTROL
SUB NOISE CANCELL
TIME CONSTANT
NOISE-CAN LEVEL SELECT
APC LEVEL CONT
REF BC
BC TRANSIENT COMP
BC TRANS COMP
VIDEO PEAKING
S-VHS/ EDIT SW
APC GAIN SW
ACC AMP & DET
PILOT BURST INSERT
MAIN BALANCED MOD
BURST UP
PILOT BURST GEN
PHASE SELECT
BURST GATE PULSE GEN
BURST DOWN
BURST ERROR DET
PB APC DET
REC APC DET
APC PC
AFC DET
320FH VCO
RV401 320FH VCO
RV505 320FH VCO
CHROMA LINEARITY COMP
BURST GATE SW
REC OUT AMP & KILLER SW
TRAP/EQ
COLOR DET
2FC BIG PROCESSOR
PB C RF EQ
PB C RF AMP
PB AMP
REC/PB SELECT AMP
SYNC SEP
SYNC DELAY
SYNC EXP.
MOD LINEARITY COMP
GAIN SW
BUFFER
LPF
HPF
EQ
TRAP
MIX
DEMOD
LPF& AMP
LIMITER
HPF& LIMITER
AGC
YNR
CLAMP
SUB BALANCED MOD
SUB CLP
VCXO
OSC
CF100
BPF
MUTE & BUFF
PHASE SHIFT
4.43MHz X100
5.06MHz BPF
4.43MHz BPF
FLS02
FLS00
RV14 VHS DARK CLIP LEVEL
RV15 VHS WHIT CLIP LEVEL
RV16 S-VHS SYNC CARRIER
RV17 S-VHS DEVIATION
RV18 S-VHS SYNC CARRIER
RV19 VHS DEVIATION
RV501 BC/Y DELAY
RV502 BC/C DELAY
RV503 CONVERTER BALANCE
RV403 REC Y/C DELAY
RV404 REC C RF LEVEL
RV301 BCC LEVEL
TP11 (MAIN EMPHA)
TP201 (SUB EMPH Y)
TP211 (PB/REC Y)
TP401 REC C RF2
TP402 FSC +40FH
TP403 (DOWN CONV C)
TP404 FSC
TP507 FSC
TP508 FSC +40H
1C11 (1/4)
1C11 (2/4)
1C11 (3/4)
1C11 (4/4)
1C401 (1/2)
1C401 (2/2)
1C501 (1/2)
1C501 (2/2)
1C201 PROCESSOR
1C202
1C300
1C301
1C302
1C303
1C502
1C505
Q201 H:REC
Q203 BUFFER
Q204 (2/2) LEVEL SEL SW
Q205 (1/2) 6dB AMP
Q206 (1/2) 10dB/6.8dB
Q207 (1/2) 6dB AMP
Q208 (1/2) 10dB/6.8dB
Q209 (1/2) 6dB AMP
Q210 (1/2) 10dB/6.8dB
Q211 (1/2) 6dB AMP
Q212 (1/2) 10dB/6.8dB
Q213 (1/2) 6dB AMP
Q214 (1/2) 10dB/6.8dB

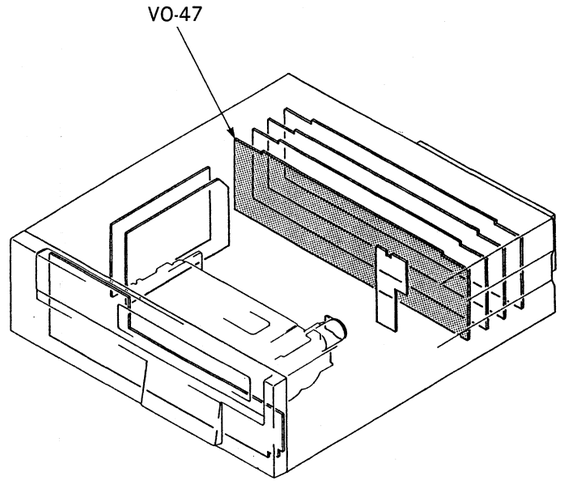

SVO-5800P ONLY

SVP-5600P ONLY

NOT USED

REC/PB SYNC

REC RF OO CN201 28 → RP. 101-2

REC/PB SYNC CN201 21A → RP. 107-2, SS. 301-21A

PB Y OO CN202 11B → TBC. 402-6B

PB V1TC Y CN201 20A → SS. 301-20A

QUASI VB CN201 10B → SS. 301-6B, TBC. 401-13B

PB FSC OO CN201 13B → RP. 107-6, TBC. 401-14B

PB 135°BURST OO CN202 23B → SS. 303-23B, TBC. 402-23B

PB C OO CN202 12B → TBC. 402-7B

PB SIG. LINE

REC SIG. LINE

VO-47

(Page 14-7)
SVO-5800P (1)
SVP-5600P (1)

TIME BASE CORRECTOR & DIGITAL NOISE REDUCER

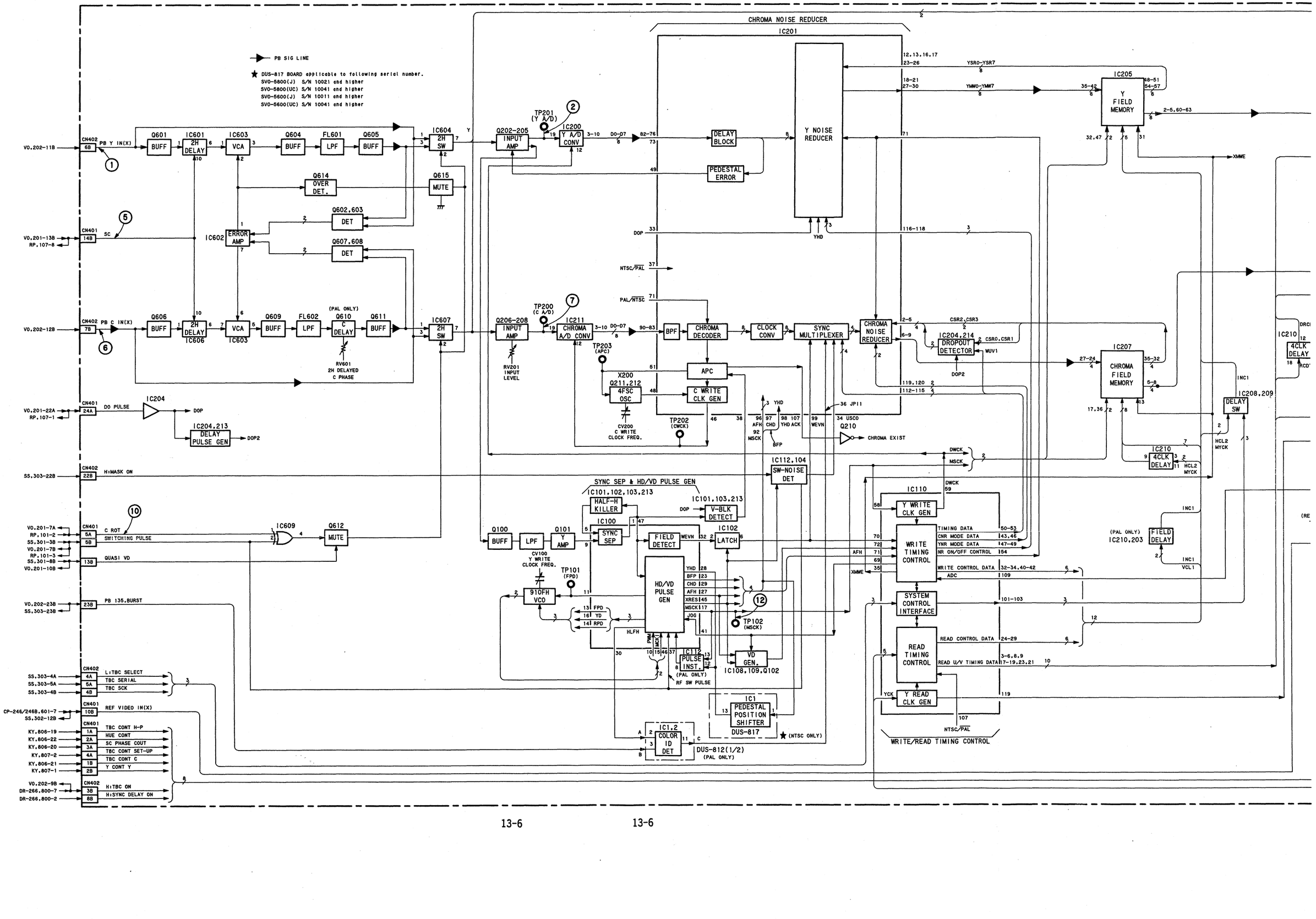

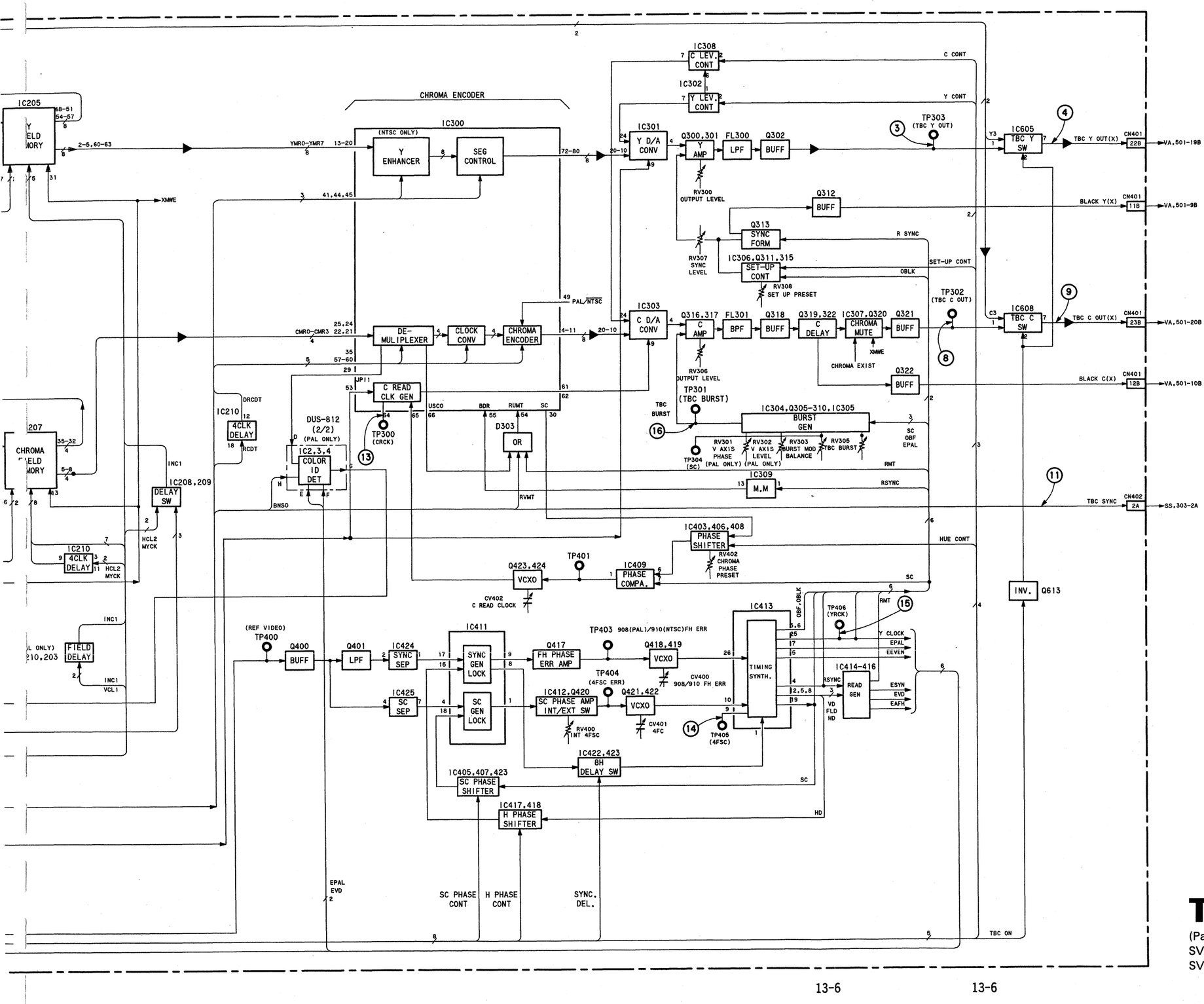

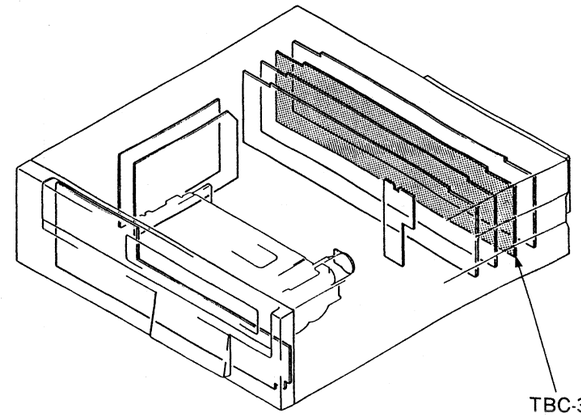

TBC-30

(Page 14-17)
SVO-5800/5800P (1)
SVP-5600/5600P (1)

<PAL>

① CN402-6B pin PB mode

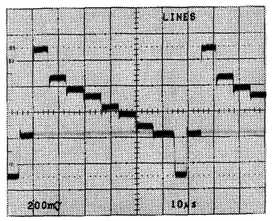

② TP201 (D-1) PB mode

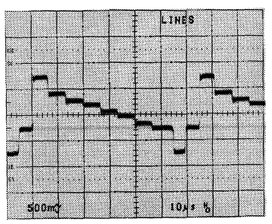

③ TP303 (P-4) PB mode

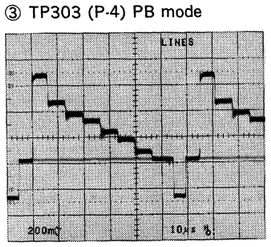

④ CN401-22B pin PB mode

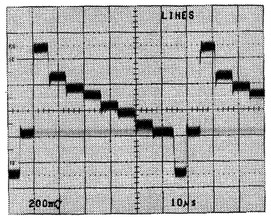

⑤ CN401-14B pin PB/STOP (E-E) mode

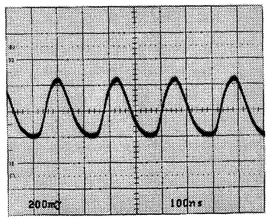

⑥ CN402-7B pin PB mode

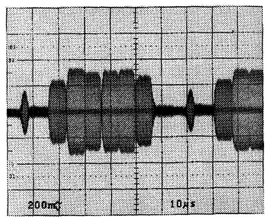

⑦ TP200 (D-2) PB mode

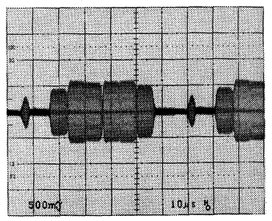

⑧ TP302 (P-3) PB mode

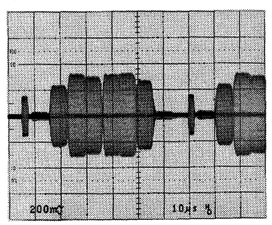

⑨ CN401-23B pin PB mode

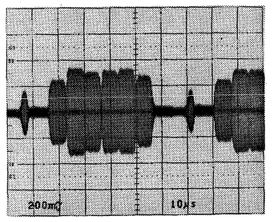

⑩ CN401-5A pin PB mode

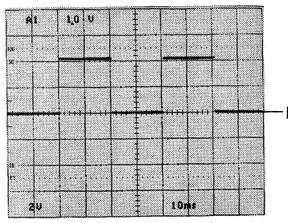

DC 0V

⑪ CN402-2A pin PB/STOP (E-E) mode

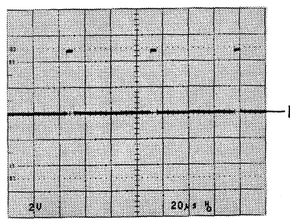

DC 0V

⑫ TP102 (D-2) PB/STOP (E-E) mode

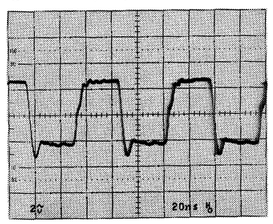

⑬ TP300 (K-3) STOP (E-E) mode

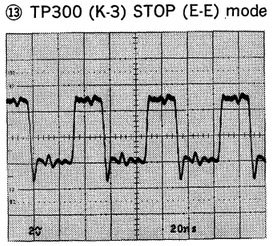

⑭ TP405 (L-1) STOP (E-E) mode

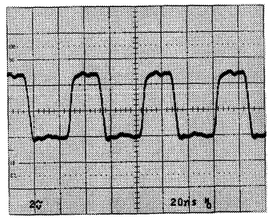

⑮ TP406 (L-2) STOP (E-E) mode

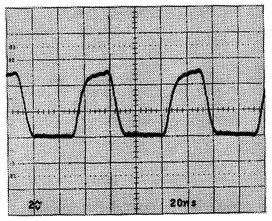

⑯ TP301 (M-2) PB/STOP (E-E) mode

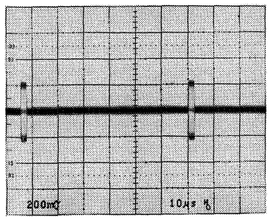

Measurement Condition

S-VIDEO IN : 75 % COLOR BARS
STOP (E-E) mode
PB (S-VHS) mode : KRV-45HPS

13-7

<PAL>

① CN501-7B pin STOP (E-E) mode

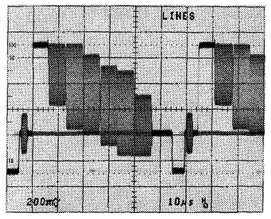

② CN501-6B pin STOP (E-E) mode

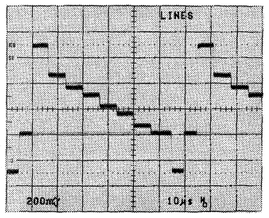

③ CN501-9B pin STOP (E-E) mode

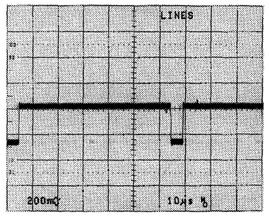

④ CN501-12B pin STOP (E-E) mode

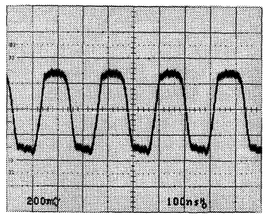

⑤ CN501-5B pin STOP (E-E) mode

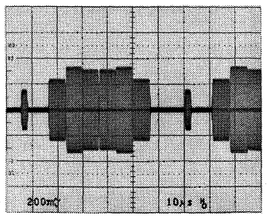

⑥ CN501-10B pin STOP (E-E) mode

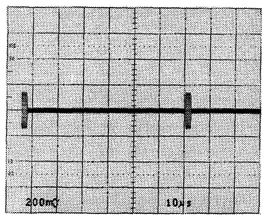

⑦ CN501-16B pin STOP (E-E) mode

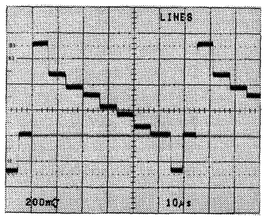

⑧ CN501-4A pin STOP (E-E) mode

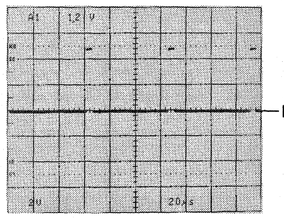

DC 0V

⑨ CN502-4A pin STOP (E-E) mode

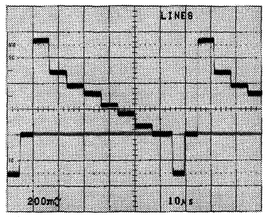

⑩ CN501-15B pin STOP (E-E) mode

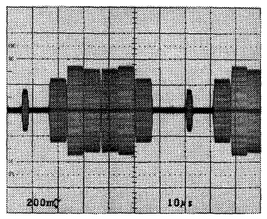

⑪ CN501-19B pin PB mode

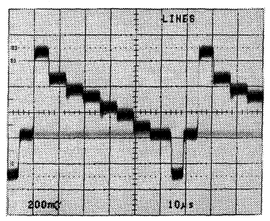

⑫ CN501-20B pin PB mode

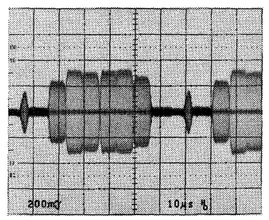

⑬ CN501-26B pin STOP (E-E) mode

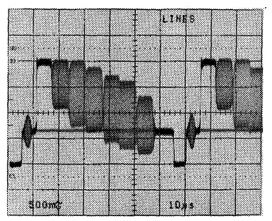

CN501-26B pin PB mode

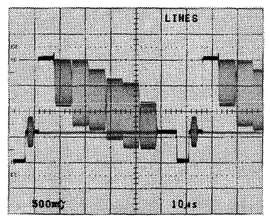

⑭ CN502-1B pin STOP (E-E) mode

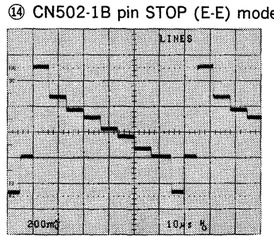

CN502-1B pin PB mode

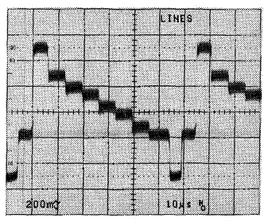

⑮ CN501-23B pin STOP (E-E) mode

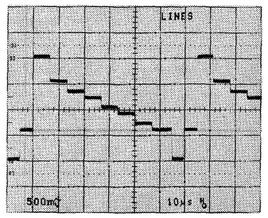

CN501-23B pin PB mode

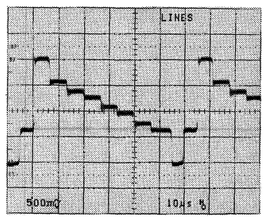

⑯ CN501-22B pin STOP (E-E) mode

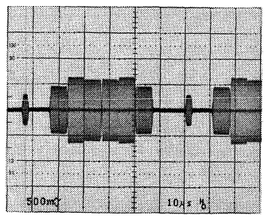

CN501-22B pin PB mode

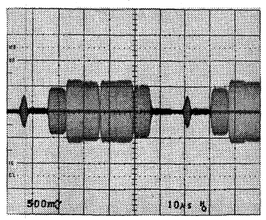

⑰ CN502-3B pin STOP (E-E) mode

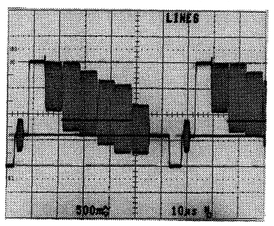

CN502-3B pin PB mode

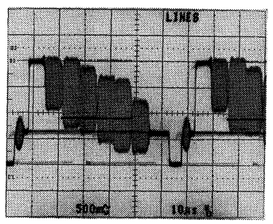

⑱ CN502-2B pin STOP (E-E) mode

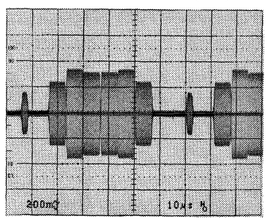

CN502-2B pin PB mode

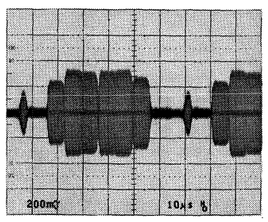

Measurement Condition

S-VIDEO IN : 75 % COLOR BARS
STOP (E-E) mode
PB (S-VHS) mode : KRV-45HPS
③, ⑥ VIDEO IN SELECT : BLACK

13-8

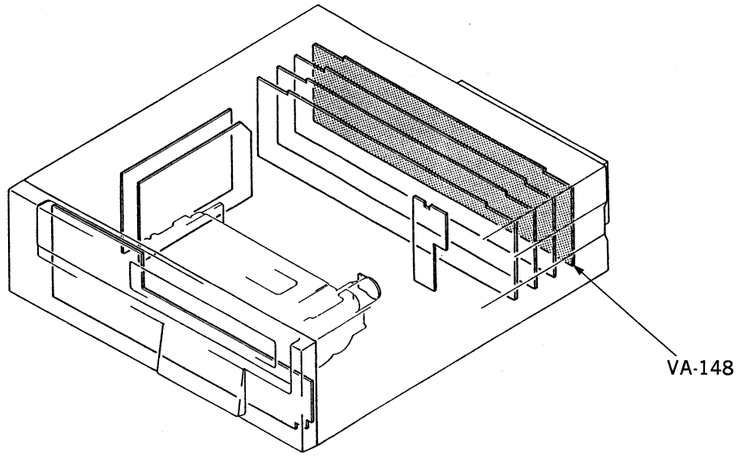

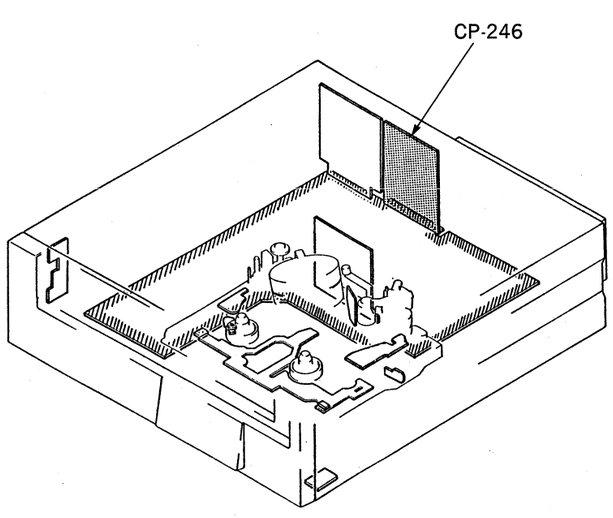

VIDEO PROCESS & OUTPUT AMP

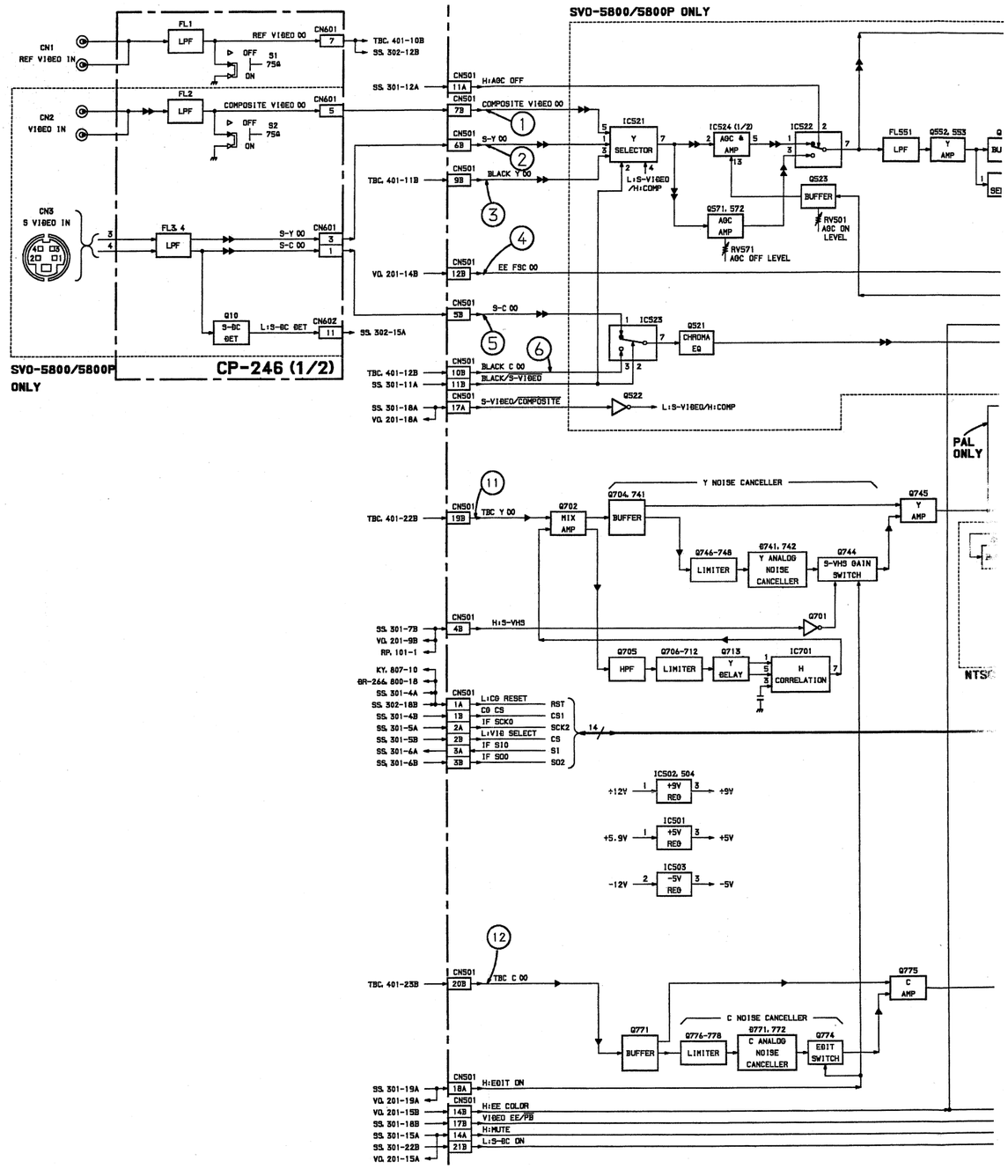

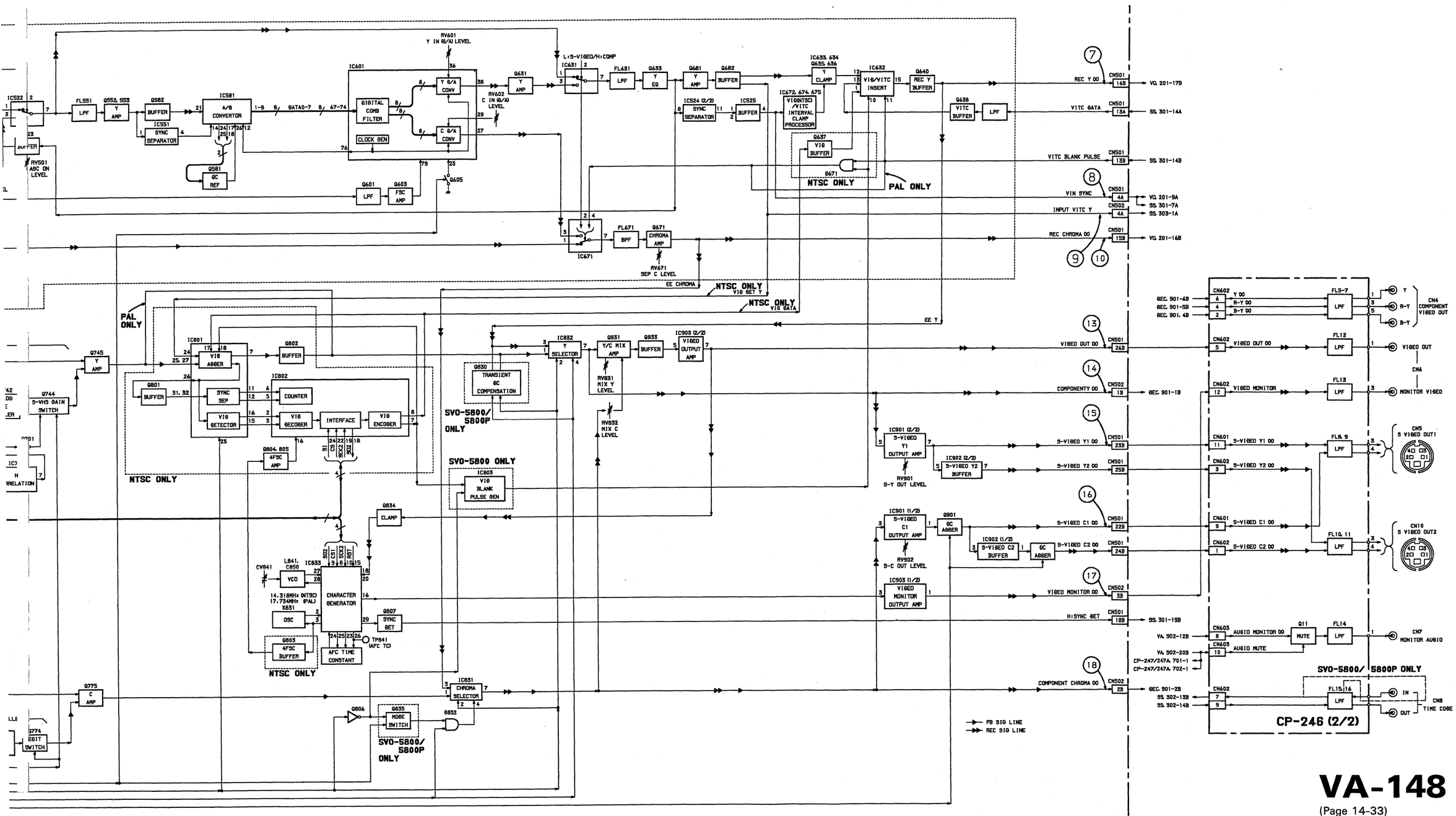

VA-148

(Page 14-33)
SVO-5800/5800P (1)
SVP-5600/5600P (1)

AFM PROCESS/NORMAL AUDIO PROCESS/LTC REC & PB AMP

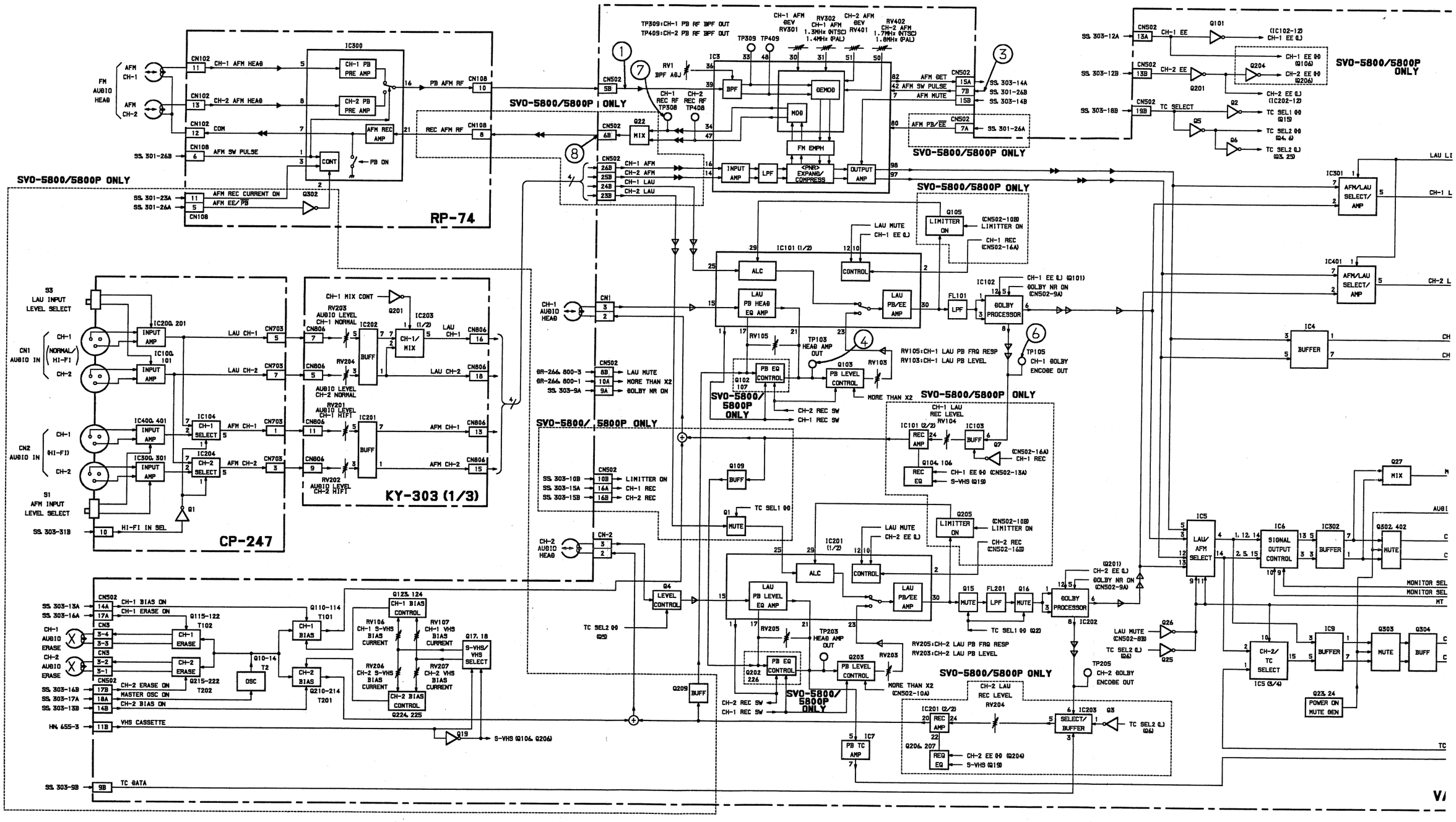

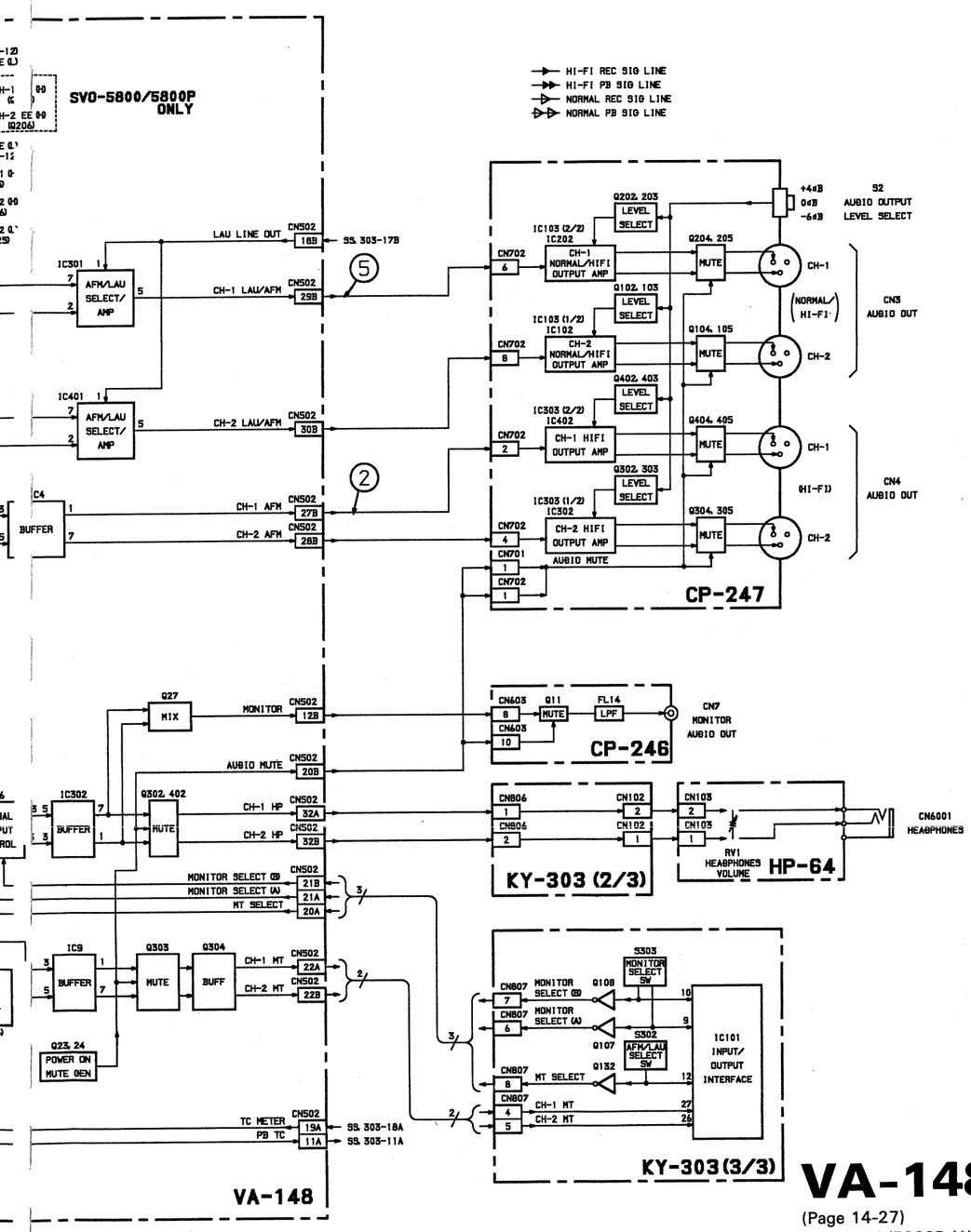

VA-148

(Page 14-27)
SVO-5800/5800P (1)
SVP-5600/5600P (1)

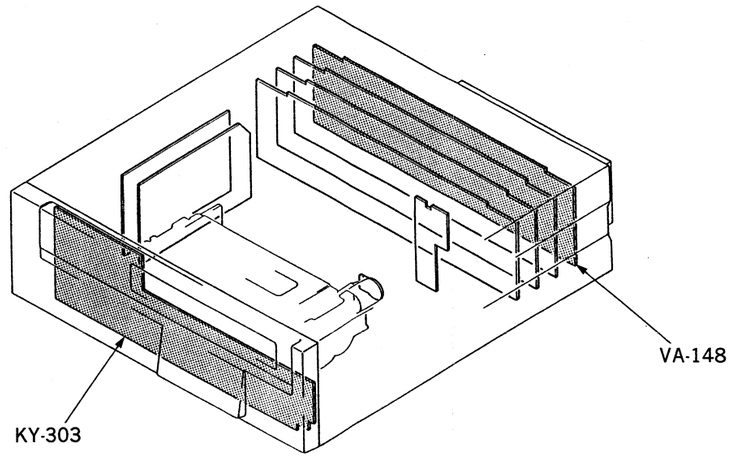

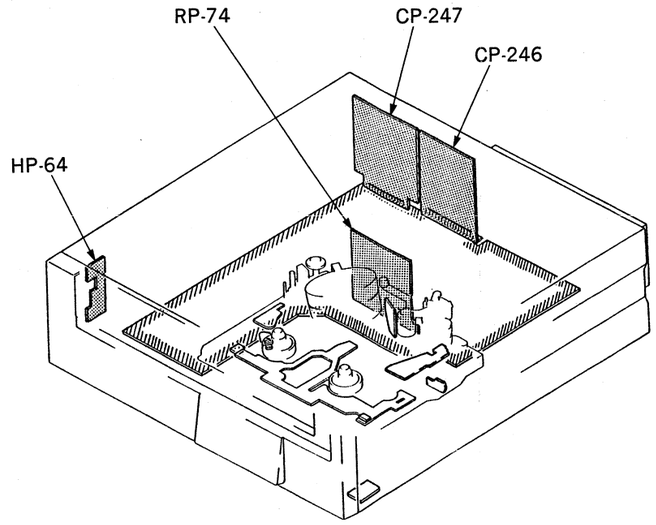

<PAL>
① CN502-5B pin PB (Hi-Fi) mode

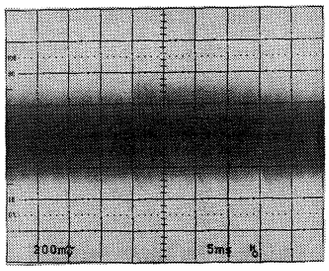

② CN502-27B pin PB (Hi-Fi) mode

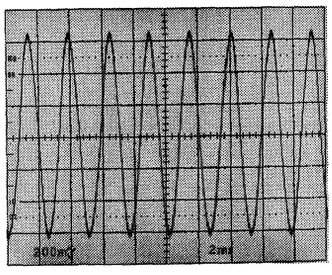

③ CN502-7B pin PB (Hi-Fi) mode

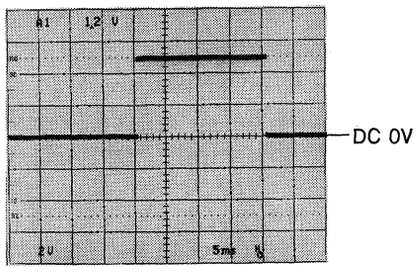

④ TP103 (H-2) PB (NORMAL) mode

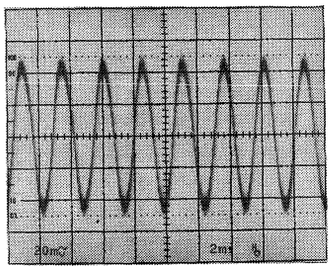

⑤ CN502-29B pin PB (NORMAL) mode

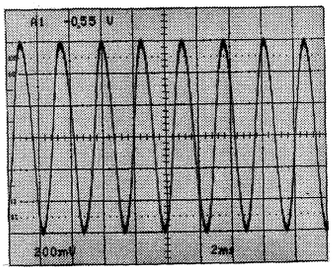

⑥ TP105 (H-3) STOP (E-E)/REC (NORMAL) mode

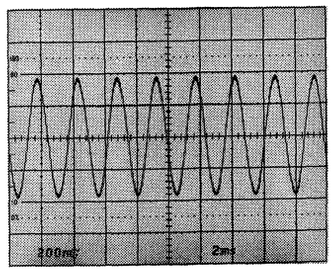

⑦ TP308 (C-3) STOP (E-E)/REC (Hi-Fi) mode

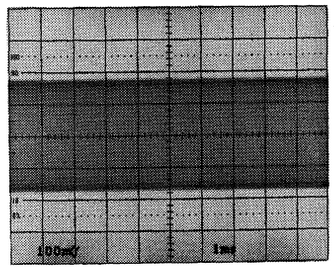

⑧ CN502-6B pin STOP (E-E)/REC (Hi-Fi) mode

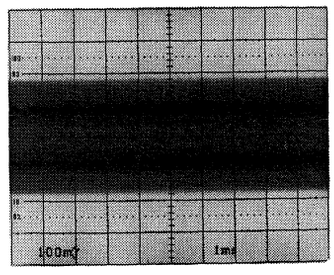

Measurement Condition

AUDIO IN (NORM) : 400Hz, +4dBm
AUDIO IN (Hi-Fi) : 400Hz, +4dBm
STOP (E-E) mode : S-VHS
REC (S-VHS) mode
PB mode : KRV-31PS (NORMAL : 400Hz)
PB mode : KRV-35PF (Hi-Fi)

<PAL>

① TP130 (M-1) PB mode

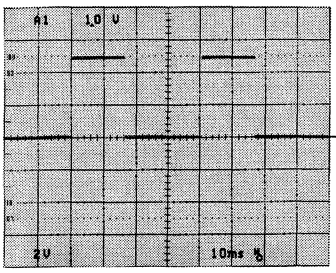

DC 0V

② TP103 (B-1) REC/STOP (E-E) mode

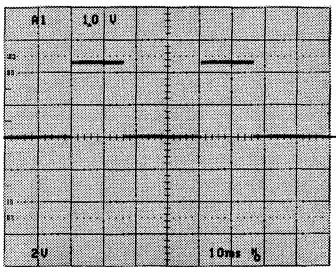

DC 0V

③ TP132 (A-5) PB mode

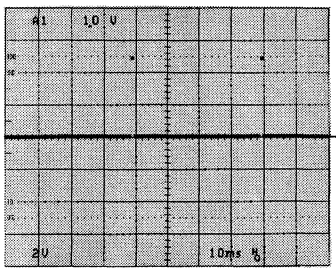

DC 0V

④ TP131 (A-4) PB mode

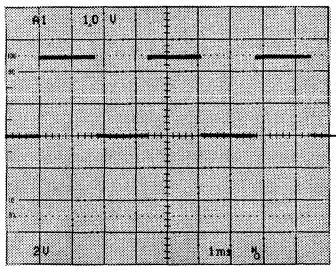

DC 0V

⑤ TP303 (P-3) REC/PB mode

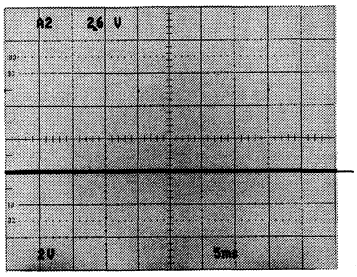

DC 0V

⑥ TP135 (A-4) REC/PB mode

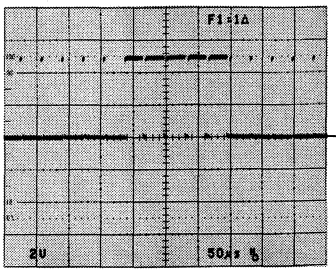

DC 0V

⑦ TP101 (A-1) PB mode

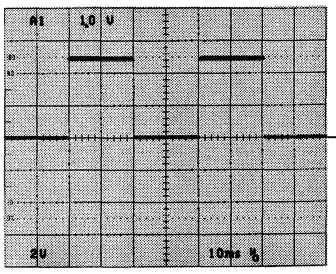

DC 0V

⑧ TP102 (B-1) PB mode

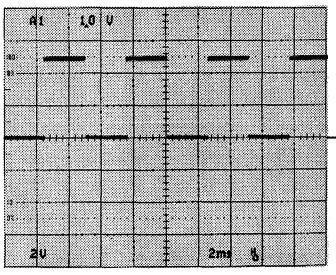

DC 0V

⑨ TP601 (M-2) PB mode

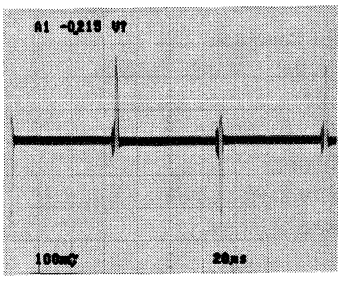

Measurement Condition

S-VIDEO IN : 75 % COLOR BARS
STOP (E-E) mode
REC (S-VHS) mode
PB (S-VHS) mode : KRV-45HPS

SERVO & SYSTEM CONTROL

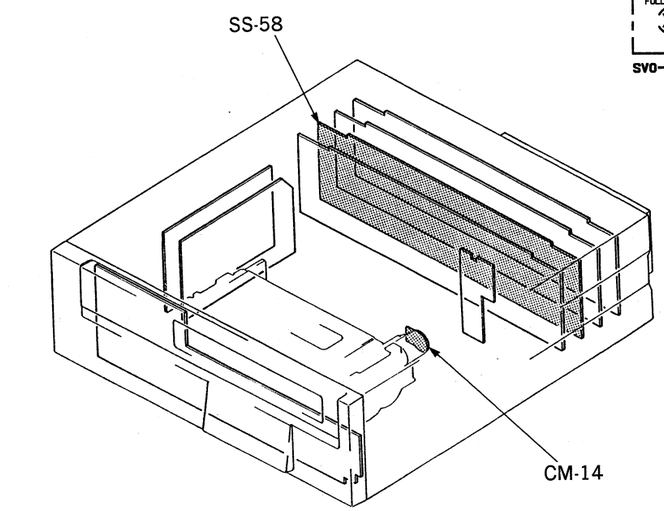

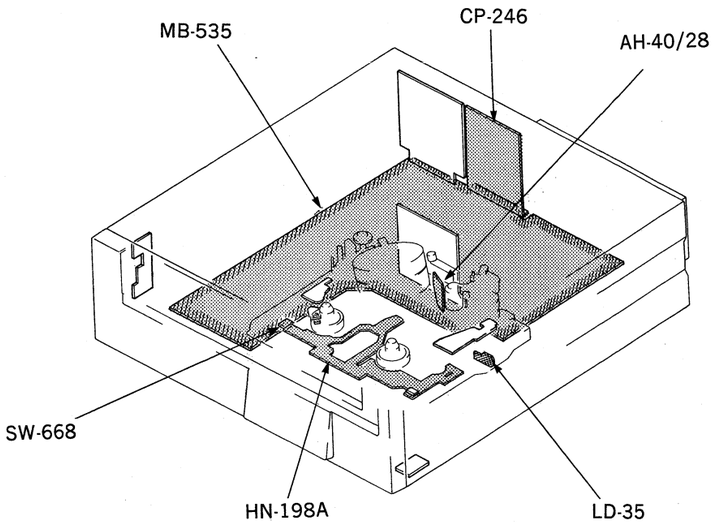

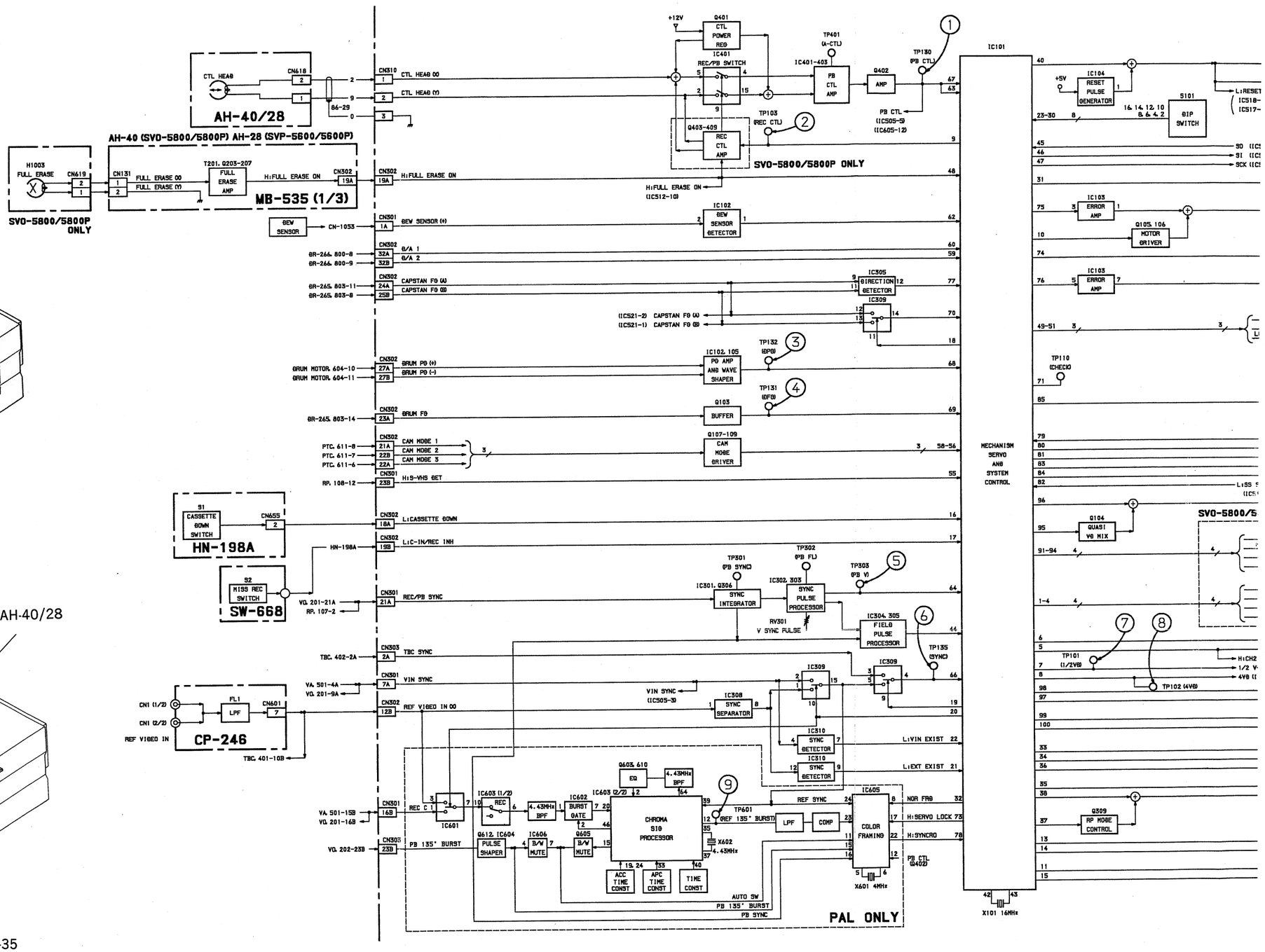

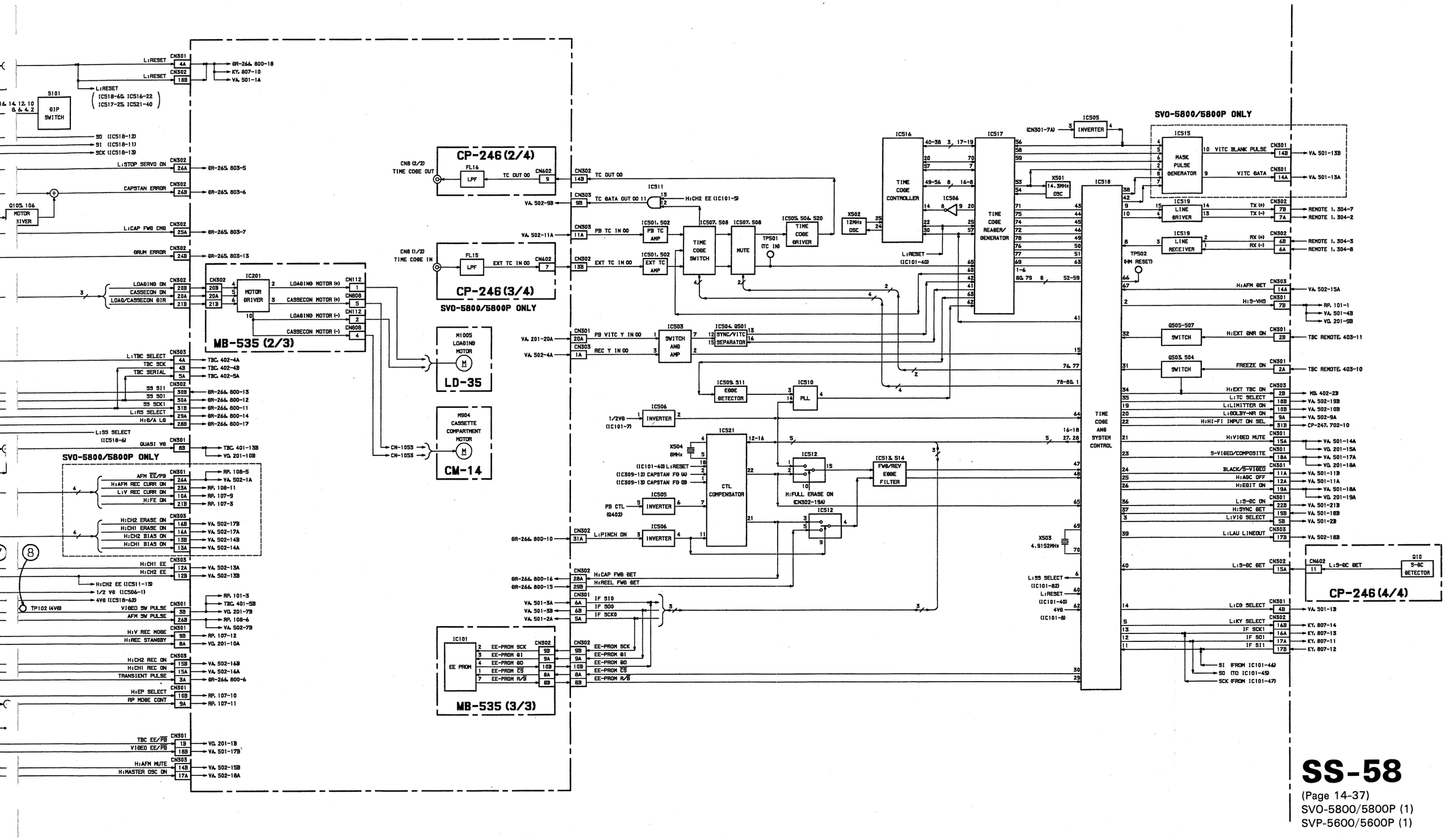

SS-58

(Page 14-37)
SVO-5800/5800P (1)
SVP-5600/5600P (1)

SERVO & SYSTEM CONTROL

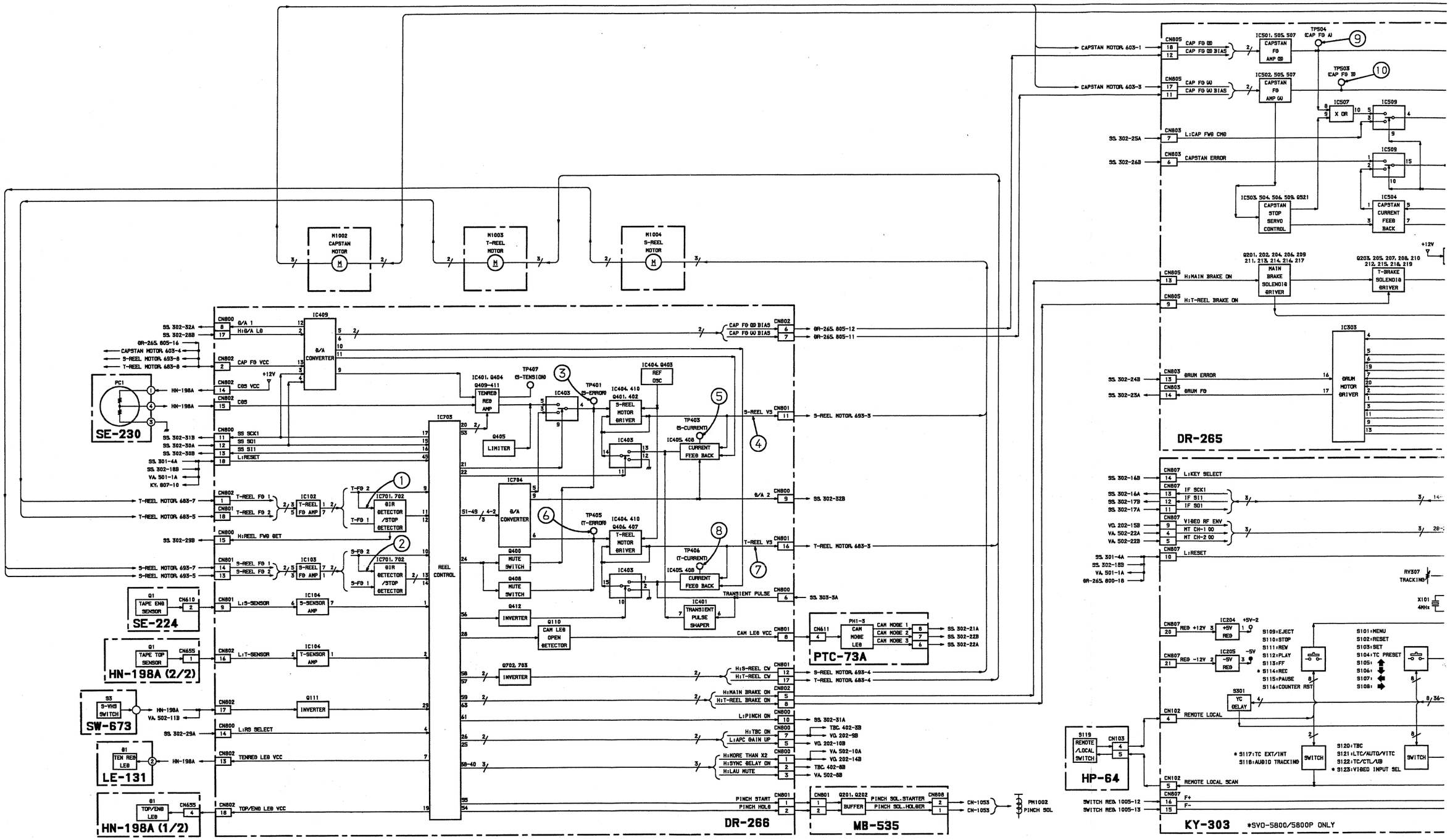

SERVO & SYSTEM CONTROL

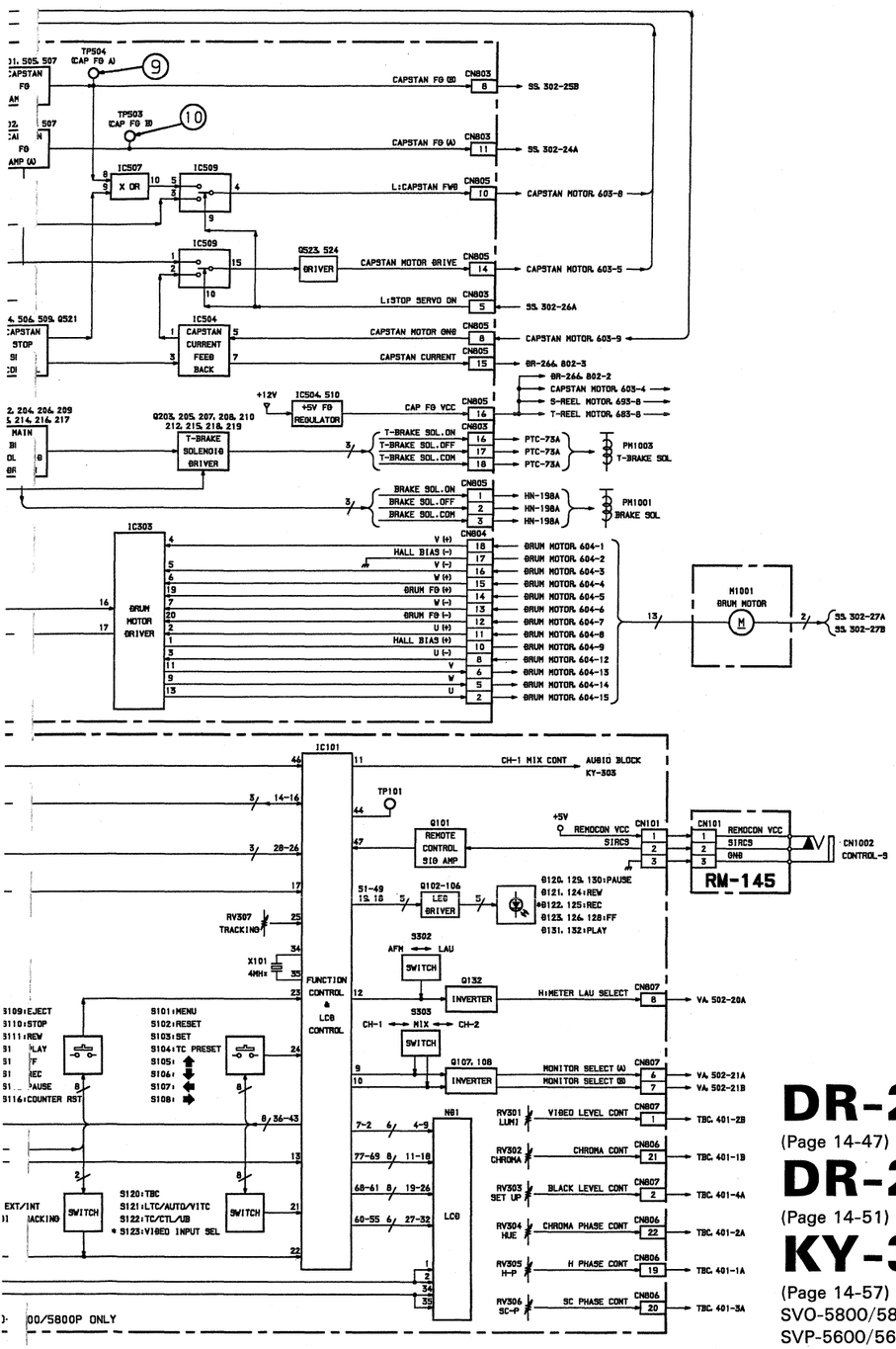

DR-265
(Page 14-47)
DR-266
(Page 14-51)
KY-303
(Page 14-57)
SVO-5800/5800P (1)
SVP-5600/5600P (1)

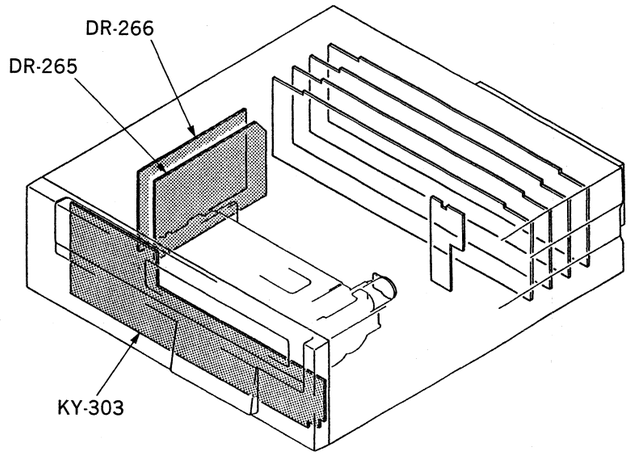

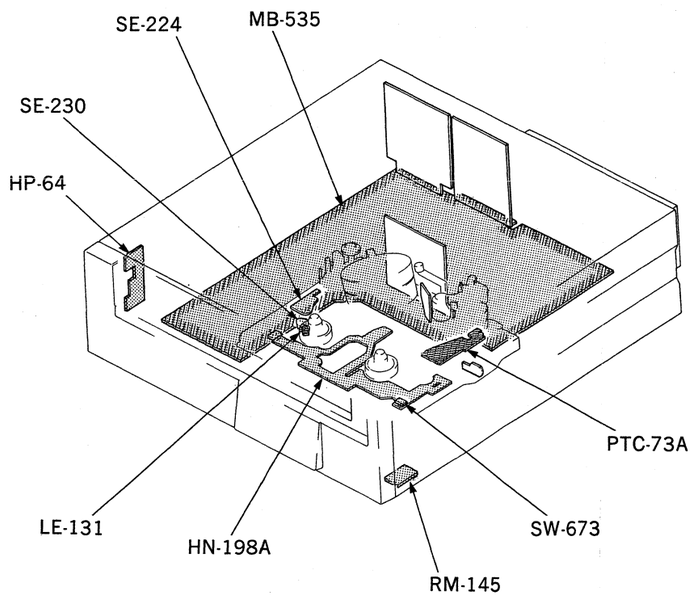

13-14

<PAL>

① IC701-11 pin PB mode

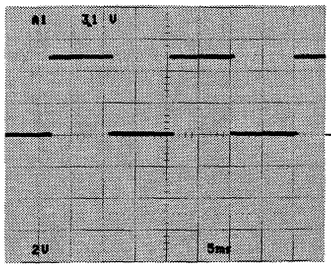

DC 0V

② IC701-3 pin PB mode

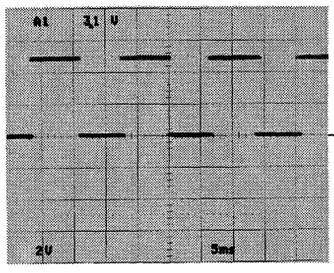

DC 0V

③ TP401 (B-4) PB mode

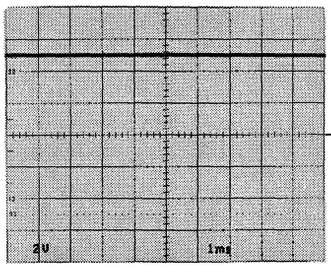

DC 0V

④ CN801-11 pin PB mode

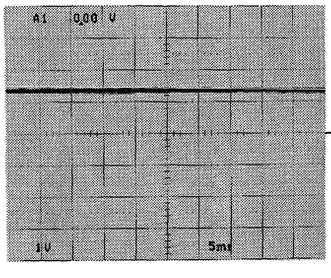

DC 0V

⑤ TP403 (B-4) PB mode

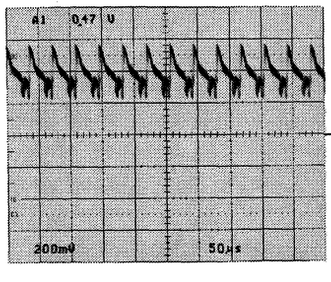

DC 0V

⑥ TP405 (C-4) PB mode

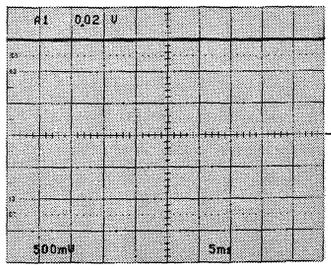

DC 0V

⑦ CN801-16 pin PB mode

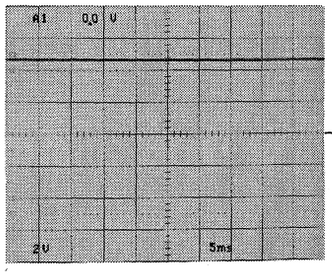

DC 0V

⑧ TP406 (B-2) PB mode

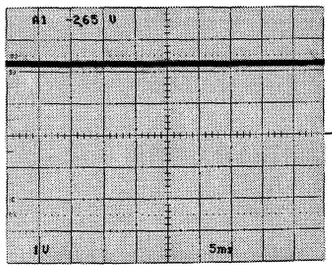

DC 0V

⑨ TP504 (D-1) PB mode

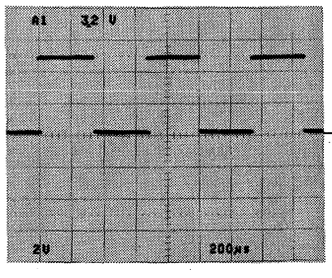

DC 0V

⑩ TP503 (E-1) PB mode

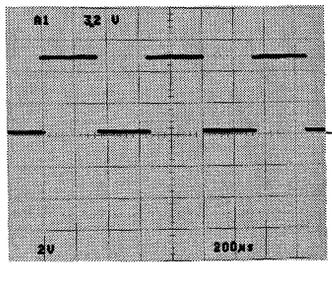

DC 0V

Measurement Condition

PB (S-VHS) mode: KRV-45HPS

SECTION 14
SCHEMATIC DIAGRAMS AND BOARD LAYOUTS

CIRCUIT FUNCTION OF THE PRINTED CIRCUIT BOARD

	Board	Circuit Function	Page
A	AH-40/28	Audio/Erase/CTL Head	14-78
C	CM-14	Cassette Compartment Motor	14-74
	CN-1053	Connection	14-74
	CP-246	Video & Timecode Input/Output Connector	14-60
	CP-247	Audio Input/Output Connector	14-62
D	DR-265	Drum & Capstan Driver& FG AMP, Brake Solenoid Driver	14-46
	DR-266	Reel Driver & Servo Control/FG AMP, Tension Sensor AMP	14-50
H	HN-198A	Connection	14-75
	HP-64	Headphone Jack/Level/Control & Remote SW	14-59
K	KY-303	Function Key/LED/Switch	14-56
L	LD-35	Loading Motor	14-76
	LE-131	Tension Regulator LED	14-75
M	MB-535	Mother Board	14-64
P	PTC-73A	CAM Mode Detect	14-74
R	RM-145	Control-S Remote Control Jack	14-57
	RP-74	Video & AFM REC/PB Head AMP	14-2
S	SE-224	Tape End Sensor	14-76
	SE-230	Tension Regulator CDS Detect	14-75
	SS-58	System & Servo Control/Timecode Generator & Reader/Color Framing	14-36
	SW-668	Miss REC SW	14-75
	SW-673	VHS Cassette SW	14-75
T	TBC-30 (inc. DUS-812)	Time Base Corrector & Digital Noise Reducer	14-14
V	VA-148	Video Process & Output AMP, FM Audio Process/Normal Audio Process/LTC AMP	14-26
	VO-47 (inc. DUS-808, DUS-809)	Video Mod/Demod & Chroma Process	14-4

回路図内において，REF. NO の近傍に下記記号が記載されていますが，これは生産時の部品データである。

In the schematic diagrams, the following marks are described near by reference number.
These are parts data at factory.

CAPACITOR (C)

AL, AS	ELECTROLYTIC
TA	TANTALUM
CA, CC, CCS, CM, CS	CERAMIC
MPS, PP, PS, PT	MYLAR
MD	DIPPED MICA
MS	MICA

RESISTOR (R)
VARIABLE RESISTOR (RV)

RC, RD	CARBON
RF	FUSE
RN, RS	METAL
RW	WIERWOUND

各波形写真は，測定点（ロケーション）と動作モードが記載されています。
（この時のロケーションは基板上の位置を示しています。）

The mentioned items at waveform photograph of this section are measurment point (board location), and machine operation mode.

RP-74; VIDEO & AFM REC PB HEAD AMP

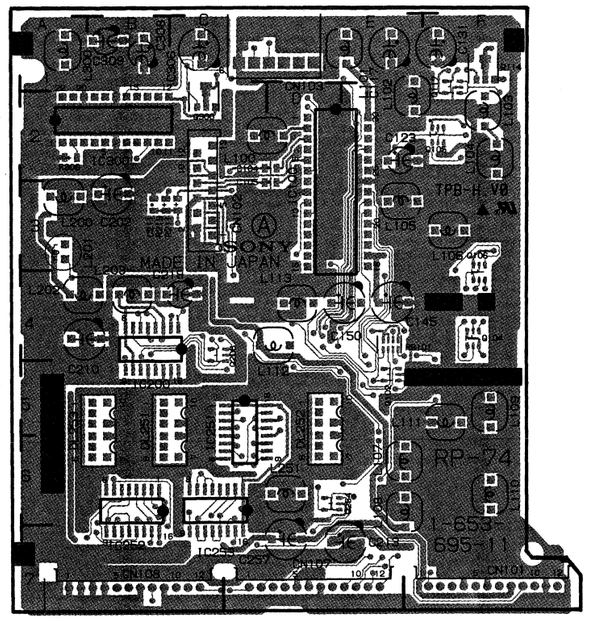

RP-74 — A SIDE —
1-653-695-11 (1)
SVO-5800/5800P
SVP-5600/5600P

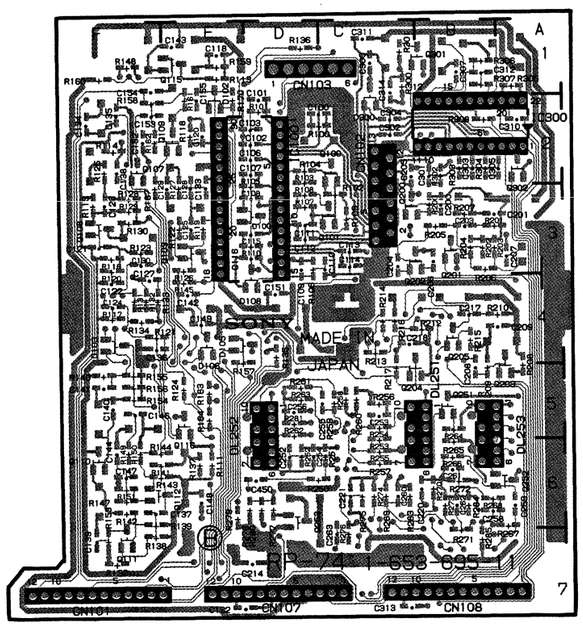

RP-74 — B SIDE —
1-653-695-11 (1)
SVO-5800/5800P
SVP-5600/5600P

RP-74 (1-653-695-11)

CN101	F-7
CN102	C-3
CN103	D-1
CN107	D-7
CN108	B-7
DL251	B-5
DL252	D-5
DL253	B-5
D100	D-3 *
○D102	E-2 *
D103	F-4 *
D105	E-4 *
D106	E-4 *
D108	D-4 *
○D300	C-2 *
IC100	D-2
IC200	C-4
IC251	C-5
IC252	B-6
IC253	C-6
IC300	A-2
Q102	E-5
Q103	E-3 *
Q104	F-4
Q105	F-2
Q106	F-4
○Q107	F-2 *
Q108	F-3 *
○Q109	E-2 *
Q110	F-6 *
Q111	F-7 *
Q112	F-6 *
○Q114	F-1
○Q115	E-1 *
Q116	E-5 *
○Q117	F-1
○Q200	C-3 *
○Q201	B-3 *
○Q202	C-3 *
Q203	A-5 *
Q204	C-5 *
Q205	B-4 *
Q206	C-4
Q251	B-5 *
Q252	A-6 *
Q253	D-6 *
○Q254	D-6
○Q300	C-2
○Q301	B-1 *
○Q302	A-2 *
RB101	E-4

* mark; B SIDE mount
○ mark; SVO-5800/5800P only

<NTSC>
① CN103-4 pin (D-1) PB mode

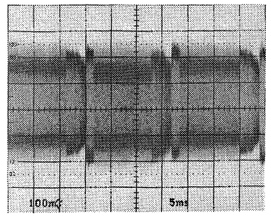

② CN103-5 pin (D-1) PB mode

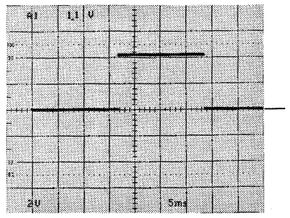

DC 0V

③ CN103-2, 3 pin (D-1) REC mode

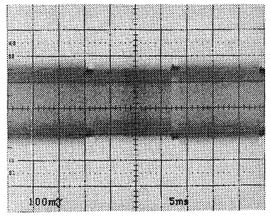

④ CN103-1 pin (D-1) PB mode

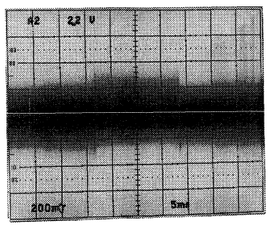

Measurement Condition
S-VIDEO IN: 75 % COLOR BARS
(SETUP 7.5%)
REC (S-VHS) mode
PB (S-VHS) mode: KRV-51HN
PB mode: KRV-35NF (Hi-Fi)

<PAL>
① CN103-4 pin (D-1) PB mode

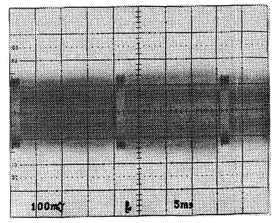

② CN103-5 pin (D-1) PB mode

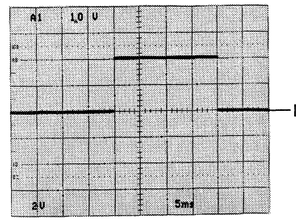

DC 0V

③ CN103-2, 3 pin (D-1) REC mode

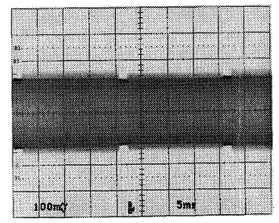

④ CN103-1 pin (D-1) PB mode

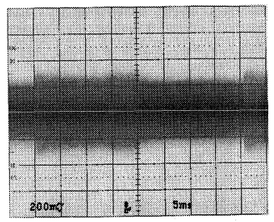

Measurement Condition
S-VIDEO IN: 75 % COLOR BARS
REC (S-VHS) mode
PB (S-VHS) mode: KRV-45HPS
PB mode: KRV-35PF (Hi-Fi)

RP-74 ; VIDEO & AFM REC/PB HEAD AMP

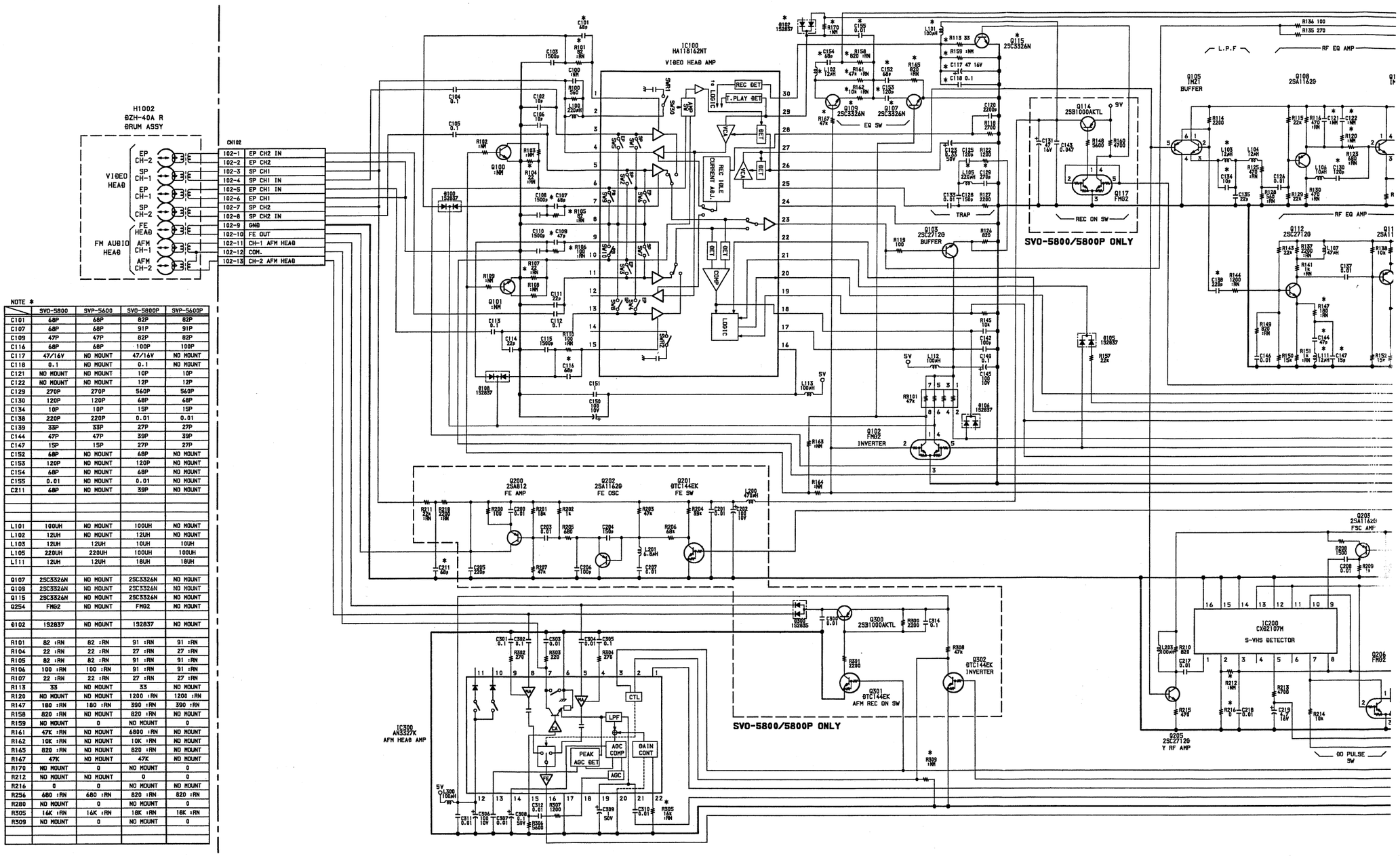

NOTE *

	SVO-5800	SVP-5600	SVO-5800P	SVP-5600P
C101	68P	68P	82P	82P
C107	68P	68P	91P	91P
C109	47P	47P	82P	82P
C116	68P	68P	100P	100P
C117	47/16V	NO MOUNT	47/16V	NO MOUNT
C118	0.1	NO MOUNT	0.1	NO MOUNT
C121	NO MOUNT	NO MOUNT	10P	10P
C122	NO MOUNT	NO MOUNT	12P	12P
C129	270P	270P	560P	560P
C130	120P	120P	68P	68P
C134	10P	10P	15P	15P
C138	220P	220P	0.01	0.01
C139	33P	33P	27P	27P
C144	47P	47P	39P	39P
C147	15P	15P	27P	27P
C152	68P	NO MOUNT	68P	NO MOUNT
C153	120P	NO MOUNT	120P	NO MOUNT
C154	68P	NO MOUNT	68P	NO MOUNT
C155	0.01	NO MOUNT	0.01	NO MOUNT
C211	68P	NO MOUNT	39P	NO MOUNT
L101	100UH	NO MOUNT	100UH	NO MOUNT
L102	12UH	NO MOUNT	12UH	NO MOUNT
L103	12UH	12UH	10UH	10UH
L105	220UH	220UH	100UH	100UH
L111	12UH	12UH	18UH	18UH
Q107	2SC3326N	NO MOUNT	2SC3326N	NO MOUNT
Q109	2SC3326N	NO MOUNT	2SC3326N	NO MOUNT
Q115	2SC3326N	NO MOUNT	2SC3326N	NO MOUNT
Q254	FM02	NO MOUNT	FM02	NO MOUNT
Q102	1S2837	NO MOUNT	1S2837	NO MOUNT
R101	82 ±RN	82 ±RN	91 ±RN	91 ±RN
R104	22 ±RN	22 ±RN	27 ±RN	27 ±RN
R105	82 ±RN	82 ±RN	91 ±RN	91 ±RN
R106	100 ±RN	100 ±RN	91 ±RN	91 ±RN
R107	22 ±RN	22 ±RN	27 ±RN	27 ±RN
R113	33	NO MOUNT	33	NO MOUNT
R120	NO MOUNT	NO MOUNT	1200 ±RN	1200 ±RN
R147	180 ±RN	180 ±RN	390 ±RN	390 ±RN
R158	820 ±RN	NO MOUNT	820 ±RN	NO MOUNT
R159	NO MOUNT	0	NO MOUNT	0
R161	47K ±RN	NO MOUNT	680Ω ±RN	NO MOUNT
R162	10K ±RN	NO MOUNT	10K ±RN	NO MOUNT
R165	820 ±RN	NO MOUNT	820 ±RN	NO MOUNT
R167	47K	NO MOUNT	47K	NO MOUNT
R170	NO MOUNT	0	NO MOUNT	0
R212	NO MOUNT	NO MOUNT	0	0
R216	0	0	NO MOUNT	NO MOUNT
R256	680 ±RN	680 ±RN	820 ±RN	820 ±RN
R280	NO MOUNT	0	NO MOUNT	0
R305	16K ±RN	16K ±RN	18K ±RN	18K ±RN
R309	NO MOUNT	0	NO MOUNT	0

A | B | C | D | E | F | G | H

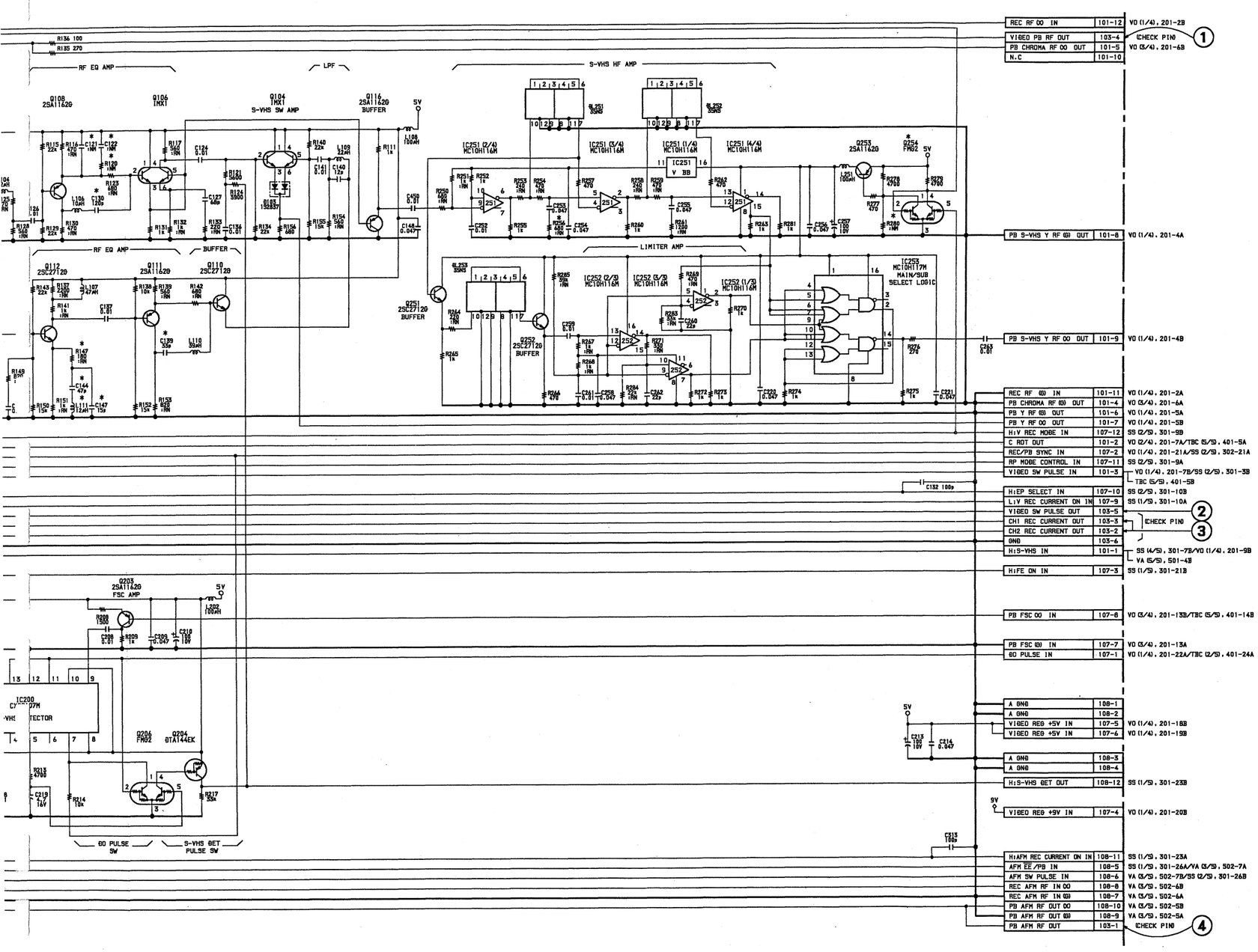

RP-74

1-653-695-11 (1)
SVO-5800/5800P
SVP-5600/5600P

VO-47 ; VIDEO MOD/DEMOD & CHROMA PROCESS

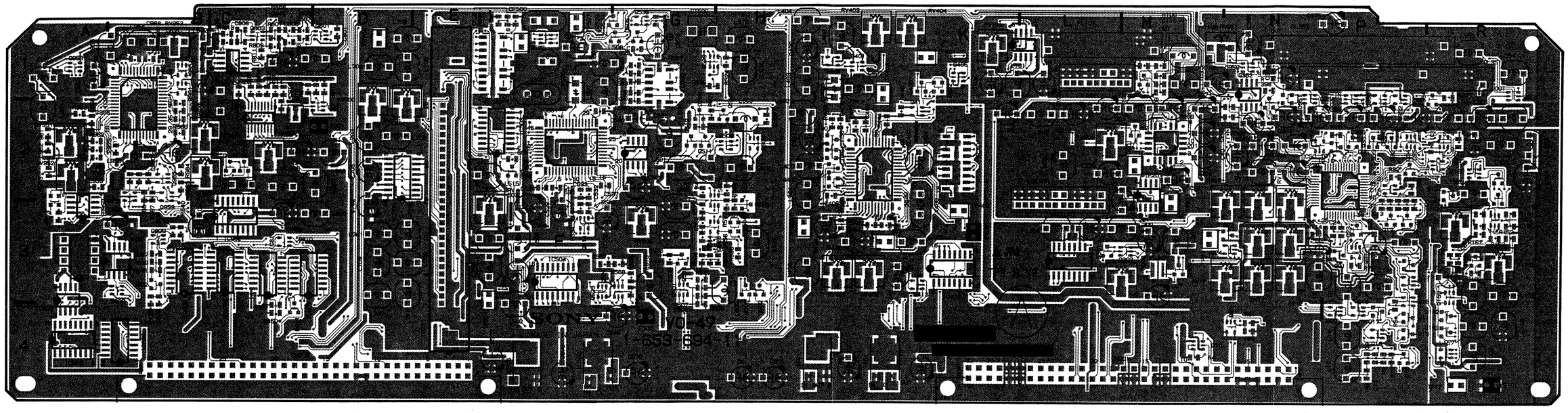

VO-47 — A SIDE —
1-653-694-11 (1)
SVO-5800/5800P
SVP-5600/5600P

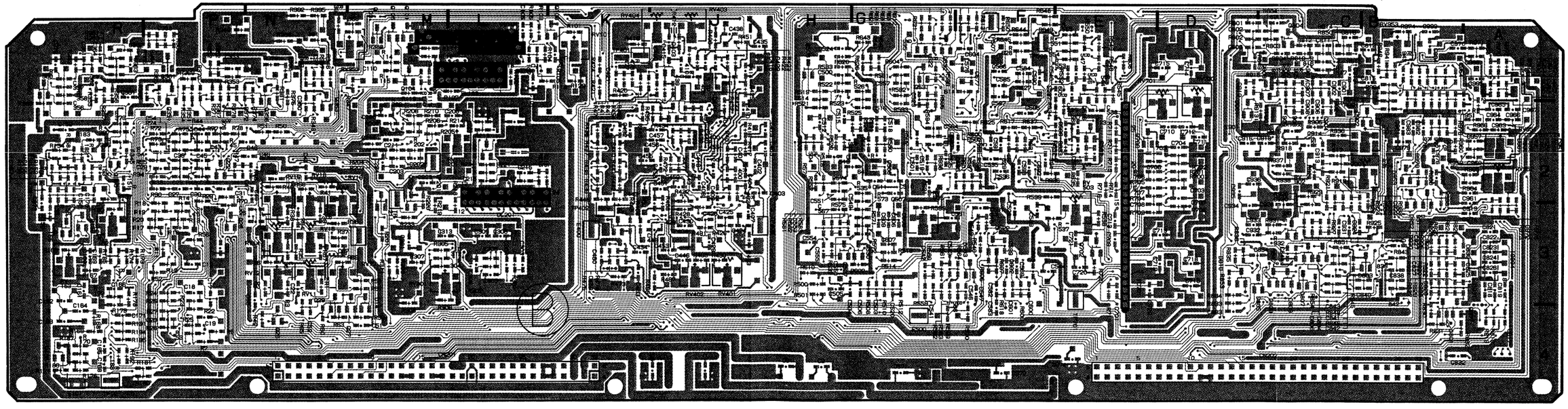

VO-47 — B SIDE —
1-653-694-11 (1)
SVO-5800/5800P
SVP-5600/5600P

NOTE :
C953は基板上のシルクの極性とは逆にマウントすること。
C953 is mounted reverse to indicating pole on board.

VO-47
CF500
CN20
CN20
CT50
◎CV40
●CV50
DL20
DL35
DL35
D10
D11
○D12
D13
○D14
○D151
D201
D351
◎D400
●D402
D500
D503
D504
D505
D80
D80
D80
D80
D80
D80
D80
D80
D80
D90
D90
D95
D95
D95
D95
E101
○E400
E500
E901
FL10
FL10
FL30
○FL40
FL50
FL50
IC1
IC2
IC11
○IC12
○IC13
○IC10
IC20
○IC20
IC30
○IC35
○IC40

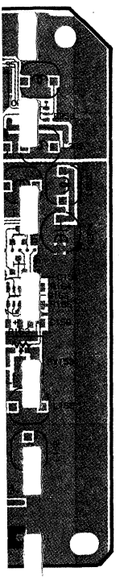

A SIDE —

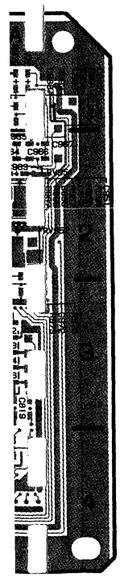

B SIDE —

VO-47 (1-653-694-11)

CF500 N	F-1	◎IC403	K-3	○Q162	R-4	Q810	C-3
		○IC500	G-2	○Q201	M-2 *	Q901	D-2
CN201	M-4	IC501	F-2	Q202	L-2 *	Q903	C-1 *
CN202	C-4	IC502	F-4	△Q203	M-2 *	Q904	C-2
		IC503	E-2	Q301	L-3	Q905	C-3 *
CT500	G-1	IC504 N	F-3	Q302	M-3	Q906	C-2
		IC505	F-4	Q303	M-3	Q951	B-1
◎CV400	J-1	IC700	E-2	○Q350	R-2 *	Q953	A-1
●CV500	F-1	IC701	E-3	Q351	P-1 *	Q955	B-2
		IC801	C-1	Q352	P-1	Q959	B-2
DL201	L-2	IC802 P	A-4	Q353	P-1	Q961	B-1
DL351	P-1	IC803 P	A-4	Q354	R-1		
DL352	P-1	IC804 P	A-3	Q355	P-1	RV11	N-3
		IC805 P	B-3	Q356	N-1 *	RV12	N-3
D10	P-4	IC806 P	B-4	Q358	N-1	○RV14	N-3
D11	P-4	IC807	D-3	Q359	R-1	○RV15	N-3
○D12	P-2	IC808	B-3	Q360 P	R-1 *	○RV16	N-2
D13	P-4	IC809	C-3	Q361	P-1 *	○RV17	N-3
○D14	M-3 *	IC810	C-3	Q362	N-1	○RV18	N-2
○D151	R-2	IC901	C-2	Q363	N-2 *	○RV19	N-2
D201	M-2	IC902	C-3	○Q364	N-1	○RV101	K-1
D351	N-1	IC951	B-2	○Q400	J-2	○RV152	R-3
◎D400	J-2	IC952	A-3	○Q401	J-1	○RV153	R-3
●D402	K-1			●Q402	J-2	○RV201	L-2
D500	G-2	Q10	M-4	○Q403	J-1 *	RV301	M-3
D503	F-3 *	○Q11	P-3	○Q405	K-1	RV351	M-1
D504	H-3	Q12	P-3	○Q406	K-1	○RV401	J-3
D505 P	G-1	Q13	P-3	○Q408	J-1	◎RV402	J-3
D801 P	B-4 *	Q14	P-3	○Q410	J-2 *	○RV403	J-1
D802 N	B-3	Q15	P-2	◎Q411	K-2	○RV404	J-1
D803	B-3 *	Q16	P-4	○Q413	K-3	RV503	E-3
D804	C-3 *	Q17	P-4	○Q414	K-3 *	RV505	G-3
D805	C-3 *	Q18	P-3	Q500	H-3	RV700	D-1
D806	C-3 *	Q19	P-4	Q501	G-3	RV701	D-2
D807	C-3 *	Q20	P-4	Q502	H-3	RV901	B-2
D808	C-3 *	Q21	P-3	Q503	G-3	RV902	C-2
D809	C-3 *	Q22	P-2 *	Q504	H-2	RV951	A-2
D810	D-3 *	○Q23	N-3	Q505	H-2	RV952	A-2
D811	C-4	○Q24	N-3	Q508	H-1 *	RV953	B-1
D901	D-2 *	Q25	P-3 *	Q509	G-1	RV954 N	B-2
D902	B-2 *	○Q26	N-4 *	Q510	H-2		
D951	B-2 *	○Q27	M-3 *	Q511	G-2	TH901	C-2
D952	B-2 *	○Q28	N-4	Q512	G-2	TH903 P	C-1
D953	B-2 *	○Q29	N-3 *	Q513 P	E-2 *		
D954	A-2	Q30	P-3	Q514	F-3	○TP11	M-3
		Q31	P-3	Q516	E-1 *	○TP12	R-4
E101	R-4	Q32 N	P-2	○Q520	G-1	TP201	M-2
○E400	K-3	Q33 N	P-2	Q521	G-3	TP211	M-2
E500	G-4	Q34	P-2	Q523	F-3	○TP401	K-1
E901	D-2	○Q35	P-2	Q525	H-2	○TP402	K-3
		○Q36	P-2	Q526	H-3	○TP403	H-3
FL101	L-1	○Q37	N-2	Q527 P	H-3 *	○TP404	J-3
FL102	L-1	Q38 P	P-2 *	Q528	H-3	TP507	F-1
FL301	M-3	Q101	M-1 *	Q530	G-3 *	TP508	F-1
○FL401	K-2	Q102	M-1	Q531	G-1 *	TP700	D-1
FL500	G-1	●Q103	M-1 *	Q532	G-1 *	TP701	E-3
FL502	E-1	Q104	M-1 *	Q533	G-1	TP901	C-2
		●Q105	M-1 *	Q534	F-2		
IC1	J-4	○Q108	K-1 *	Q535 P	G-1 *	○X400	K-3
IC2	J-4	○Q151	R-2	Q536 P	G-1	X500 N	F-1
IC11	P-2	○Q152	R-2	Q537 N	F-1		
○IC12	R-2	○Q153	R-3	Q700	E-2 *		
○IC13	R-2	○Q155	R-3 *	Q702	E-3 *		
○IC101	K-1	○Q156	R-3 *	Q801	D-1		
IC201	M-2	○Q157	R-3	Q803	C-1		
○IC202	M-3	○Q158	R-4 *	Q804	C-1 *		
IC301	L-3	○Q159	R-3	Q806 P	B-3		
○IC351	N-2	○Q160	R-2	Q807 P	B-4 *		
○IC401	J-2	○Q161	R-4	Q809 N	B-3		

* mark ; B SIDE mount
○ mark ; SVO-5800/5800P only
△ mark ; SVP-5600/5600P only
● mark ; SVO-5800 only
◎ mark ; SVO-5800P only
N mark ; SVO-5800/SVP-5600 only
P mark ; SVO-5800P/SVP-5600P only

<PAL>

① CN201-4B pin (S-VHS) mode
CN201-7B pin (TRIG)

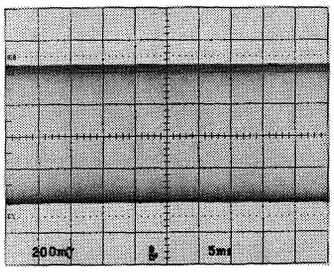

② CN201-5B pin PB (N-VHS) mode
CN201-7B pin (TRIG)

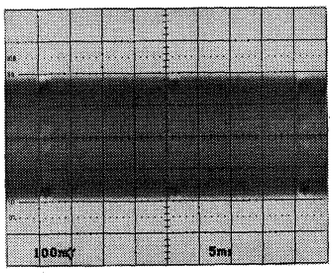

③ CN201-17B pin STOP (E-E) mode

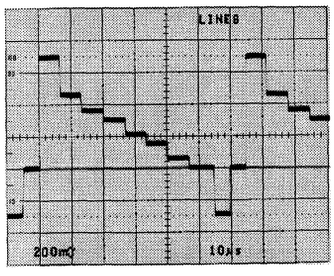

④ TP201 (M-2) REC (S-VHS) mode

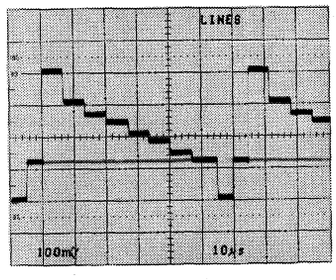

TP201 (M-2) PB (S-VHS) mode

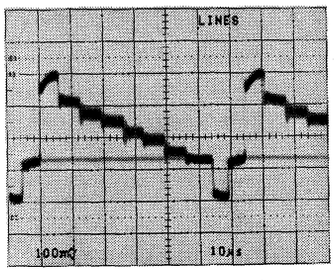

⑤ TP211 (M-2) REC (S-VHS) mode

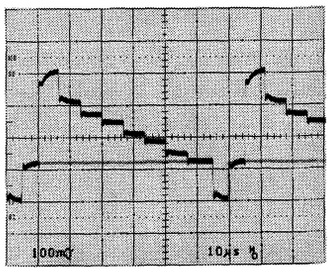

TP211 (M-2) PB (S-VHS) mode

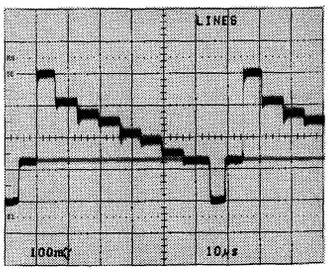

⑥ TP11 (M-3) REC (S-VHS) mode

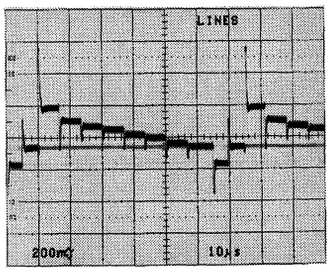

TP11 (M-3) REC (N-VHS) mode

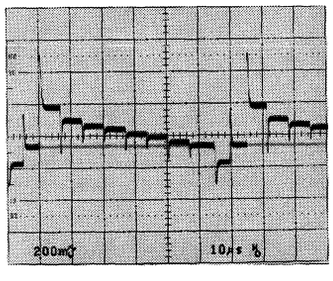

⑦ TP12 (R-4) STOP (E-E) mode

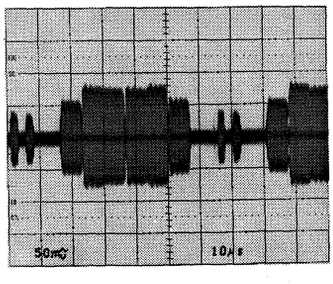

⑧ CN201-2B pin REC (S-VHS) mode

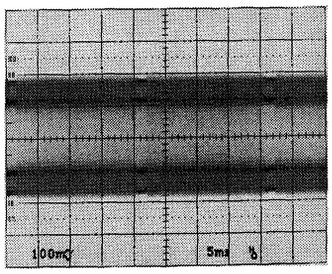

CN201-2B pin REC (N-VHS) mode

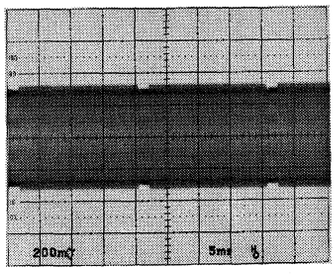

⑨ CN202-11B pin PB (S-VHS) mode

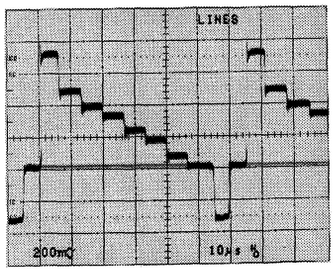

⑩ CN201-21A pin REC/PB mode

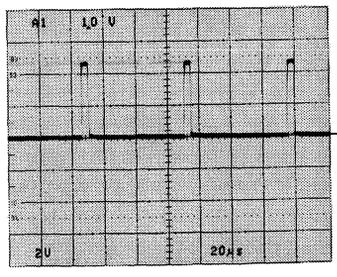

DC 0V

Measurement Condition
S-VIDEO IN : 75 % COLOR BARS
STOP (E-E) mode
REC (S-VHS) mode
REC (N-VHS) mode
PB (S-VHS) mode : KRV-45HPS
PB (N-VHS) mode : KRV-44PS

VO-47 (1/4) ; VIDEO MOD/DEMOD & CHROMA PROCESS

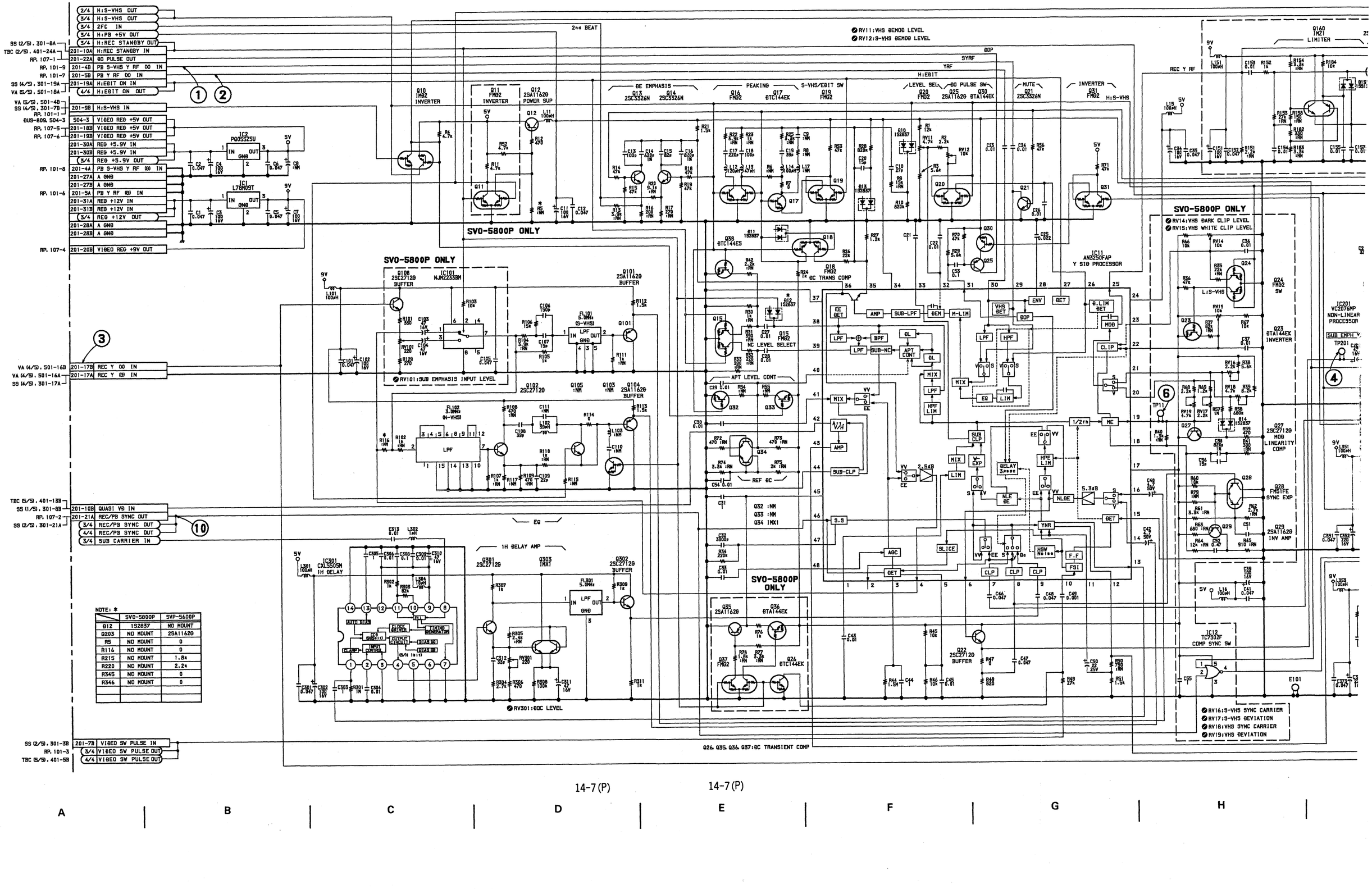

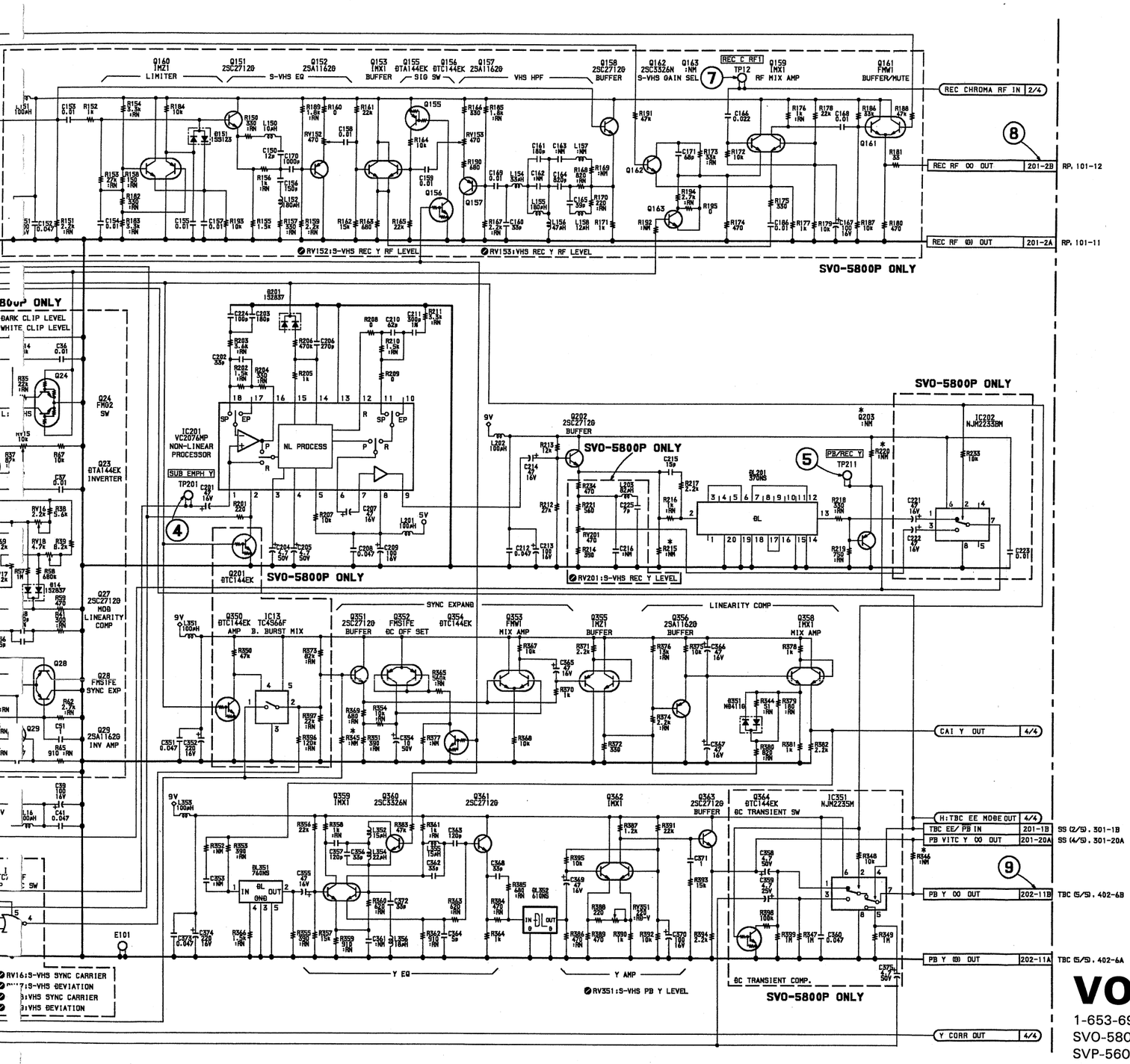

VO-47 (1/4)

1-653-694-11 (1)
SVO-5800P
SVP-5600P

14-7 (P)

14-7 (P)

VO-47 (2/4) ; VIDEO MOD/DEMOD & CHROMA PROCESS

<PAL>

① CN201-16B pin REC/STOP (E-E) mode

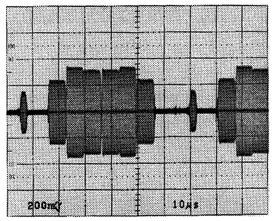

② TP403 (H-3) REC/STOP (E-E) mode

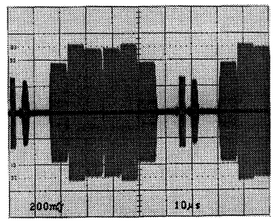

③ TP401 (K-1) REC/STOP (E-E) mode

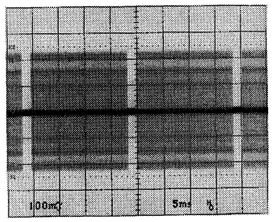

④ CN201-14B pin REC/STOP (E-E) mode

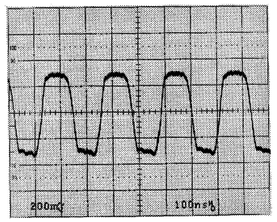

⑤ TP404 (J-3) REC/STOP (E-E) mode

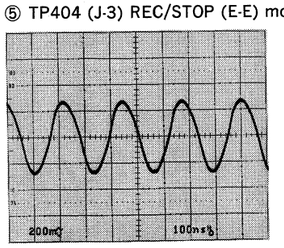

⑥ TP402 (K-3) REC/STOP (E-E) mode

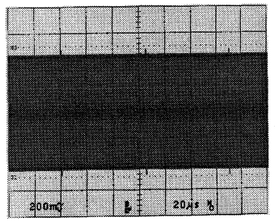

⑦ CN201-9A pin REC/STOP (E-E) mode

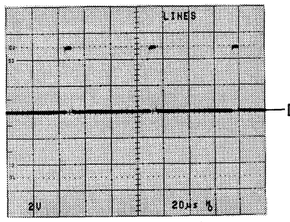

Measurement Condition

S-VIDEO IN : 75 % COLOR BARS

STOP (E-E) mode

REC (S-VHS) mode

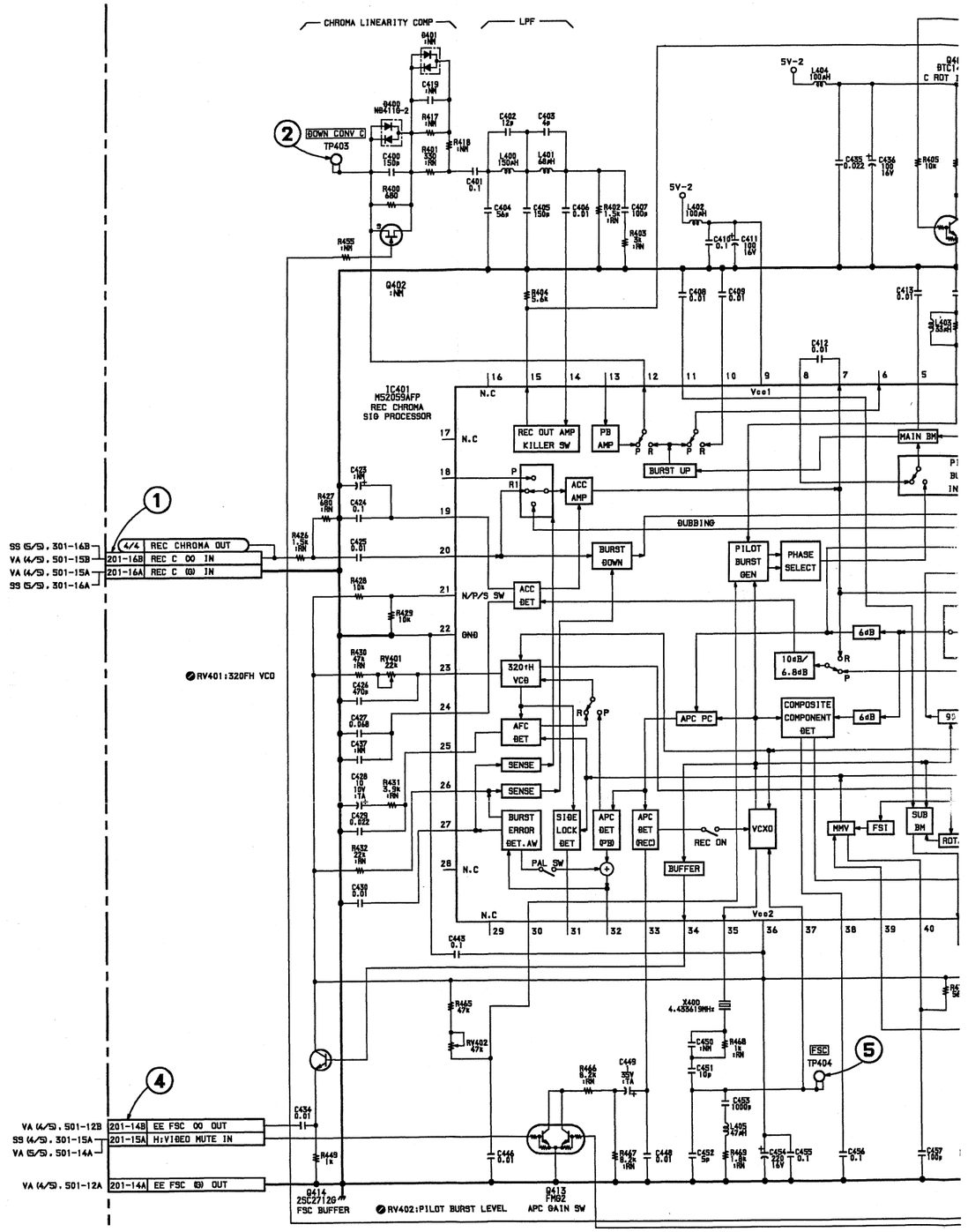

14-9 (P) 14-9 (P)

A B C D E F G H

VO-47 (2/4)

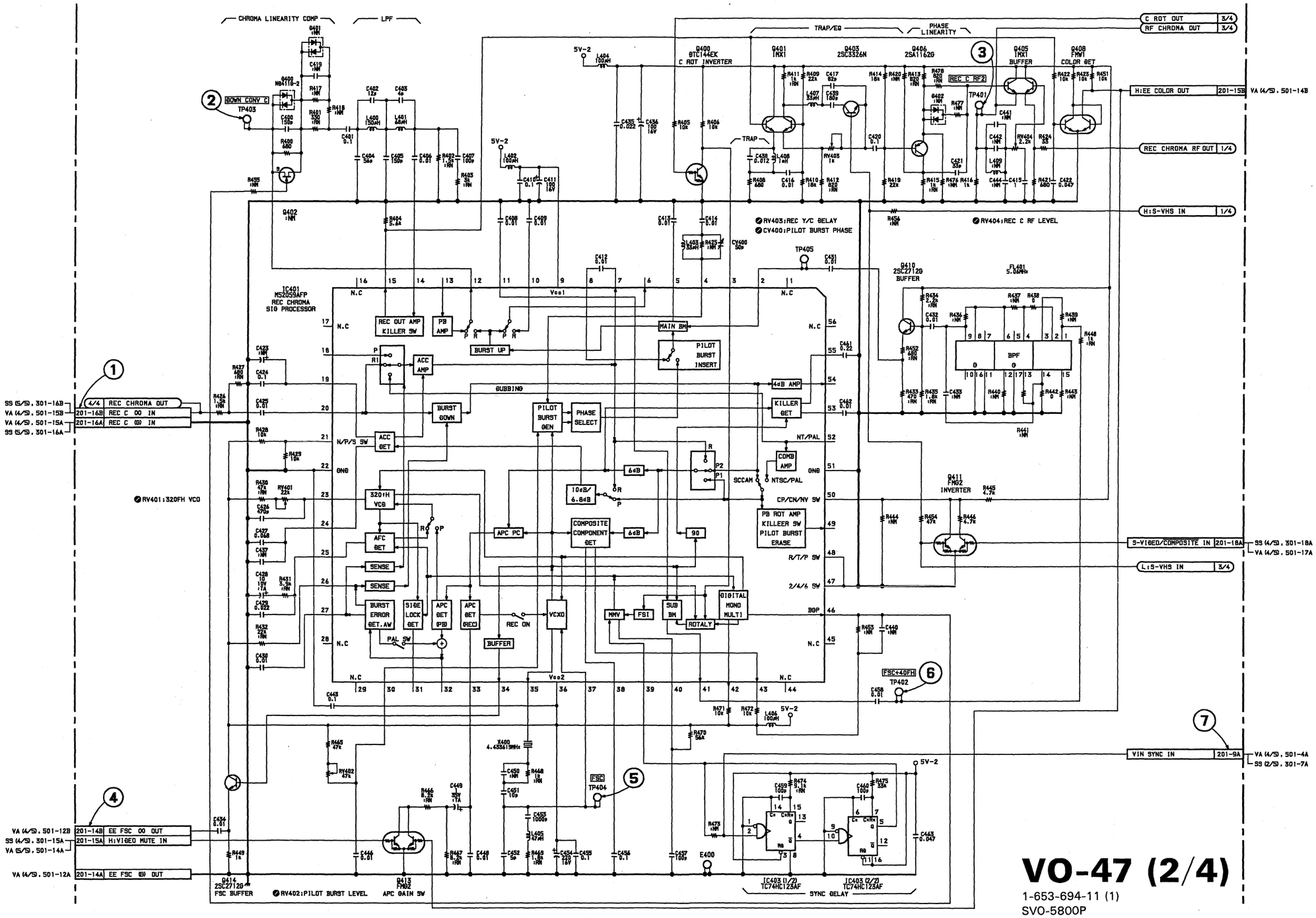

VO-47 (2/4)

1-653-694-11 (1)
SVO-5800P

14-9 (P)

VO-47 (3/4), DUS-808, DUS-809 VO-47 (3/4)

DUS-808 ; 4.43MHz/QUASI BURST OSC
DUS-809 ; ACC TIME CONSTANT CONTROL

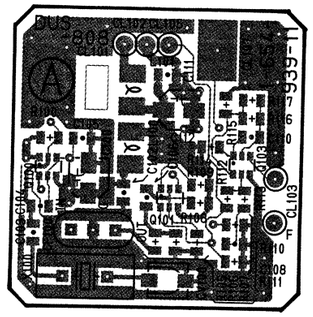

DUS-808 — A SIDE —
1-654-939-11 (1)
SVO-5800P
SVP-5600P

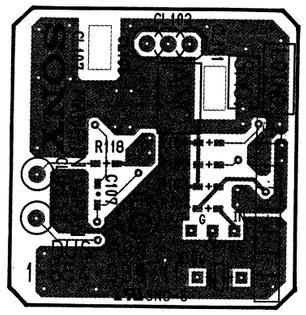

DUS-808 — B SIDE —
1-654-939-11 (1)
SVO-5800P
SVP-5600P

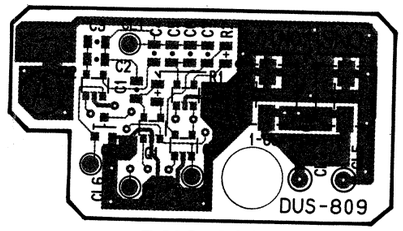

DUS-809 — A SIDE —
1-654-940-11 (1)
SVO-5800P
SVP-5600P

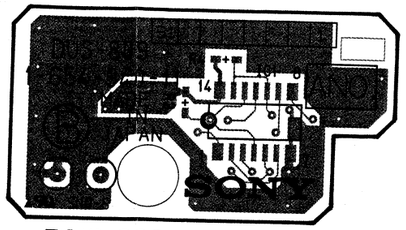

DUS-809 — B SIDE —
1-654-940-11 (1)
SVO-5800P
SVP-5600P

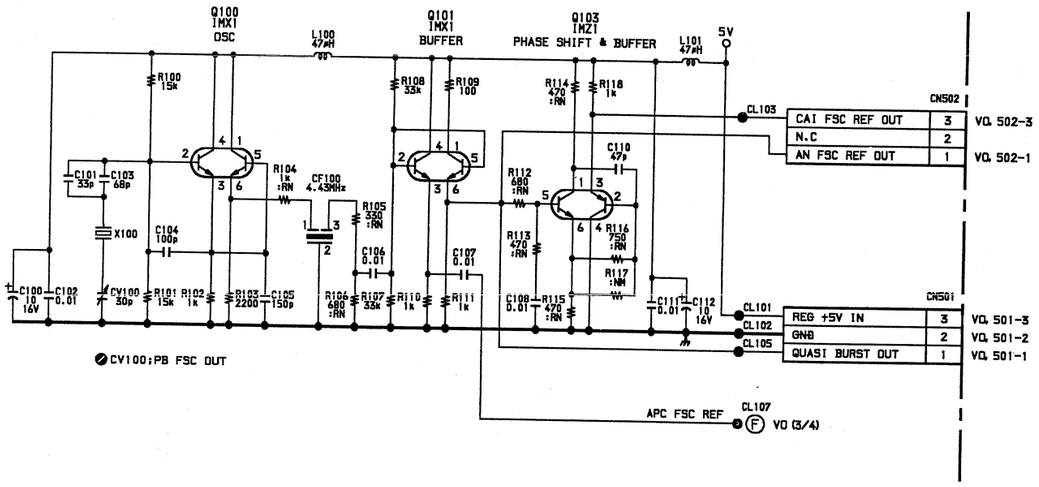

DUS-808

1-654-939-11 (1)
SVO-5800P
SVP-5600P

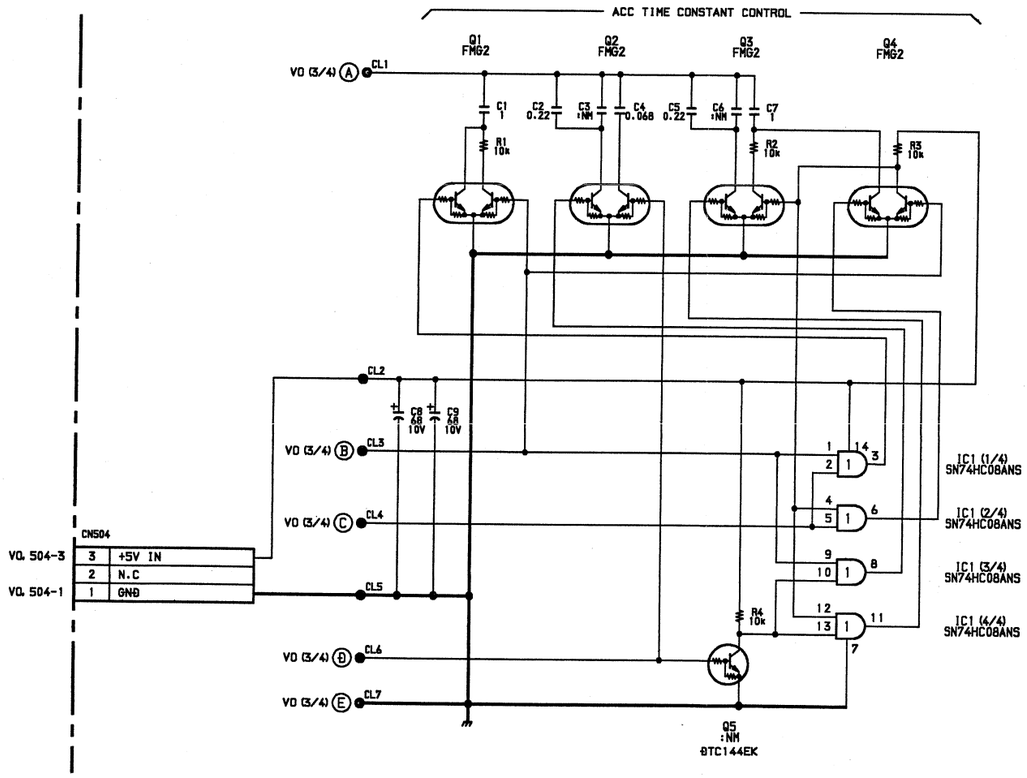

DUS-809

1-654-940-11 (1)
SVO-5800P
SVP-5600P

(PAL)
① CN201

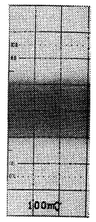

② TP701

③ TP700

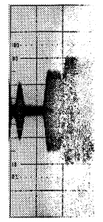

④ CN2

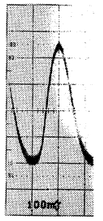

⑤ TP507 (

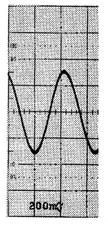

VO-47 (3/4), DUS-808, DUS-809

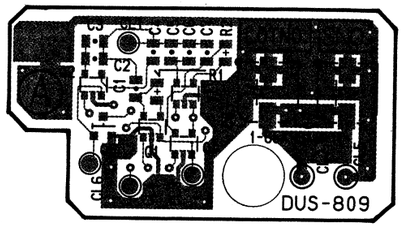

DUS-809 — A SIDE —
1-654-940-11 (1)
SVO-5800P
SVP-5600P

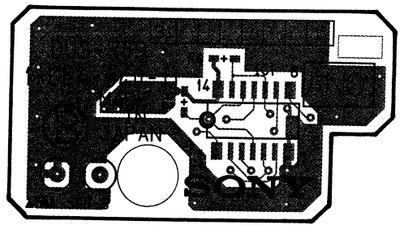

DUS-809 — B SIDE —
1-654-940-11 (1)
SVO-5800P
SVP-5600P

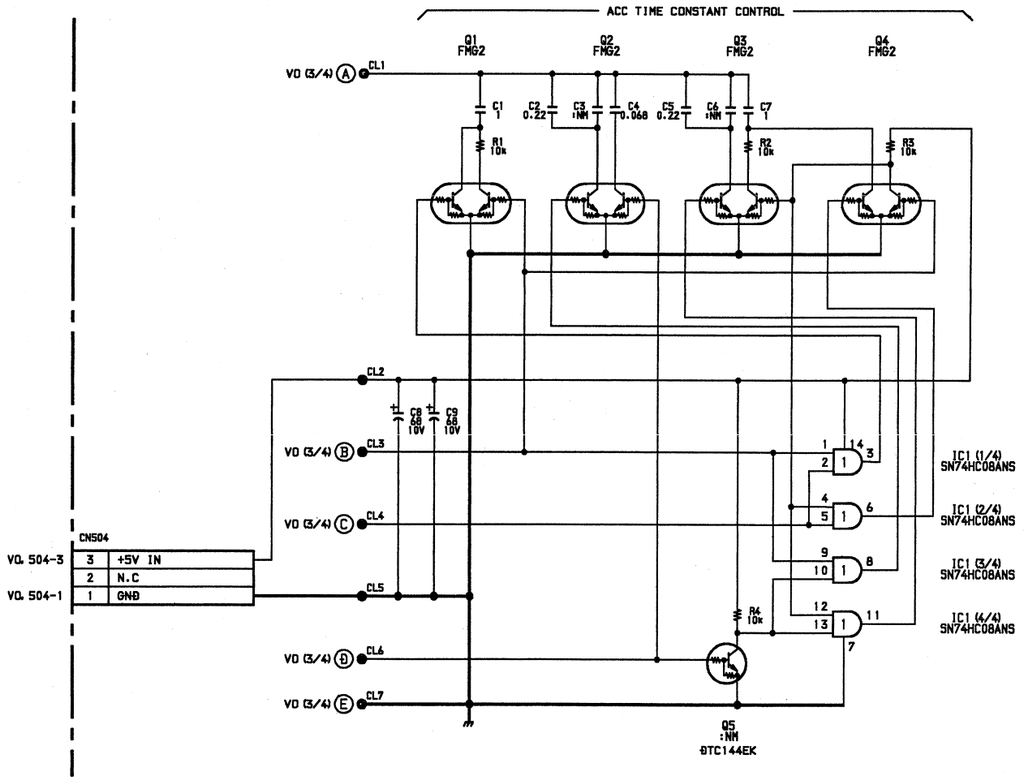

DUS-809

1-654-940-11 (1)
SVO-5800P
SVP-5600P

<PAL>
① CN201-6B pin PB mode

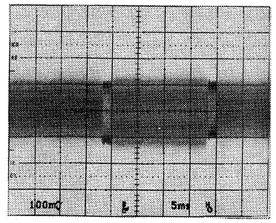

② TP701 (E-3) PB mode

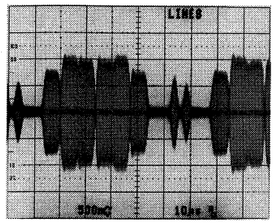

③ TP700 (D-1) PB mode

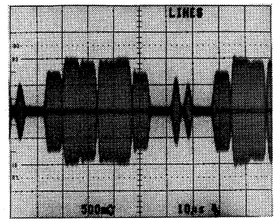

④ CN201-13B pin PB mode

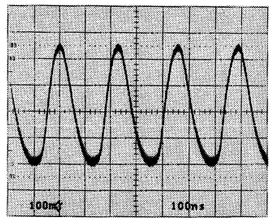

⑤ TP507 (F-1) PB mode

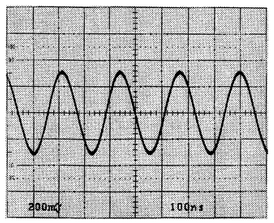

⑥ TP508 (F-1) PB mode

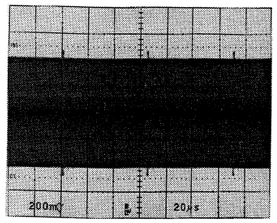

Measurement Condition
PB (S-VHS) mode : KRV-45HPS

VO-47 (3/4) ; VIDEO MOD/DEMOD & CHROMA PROCESS

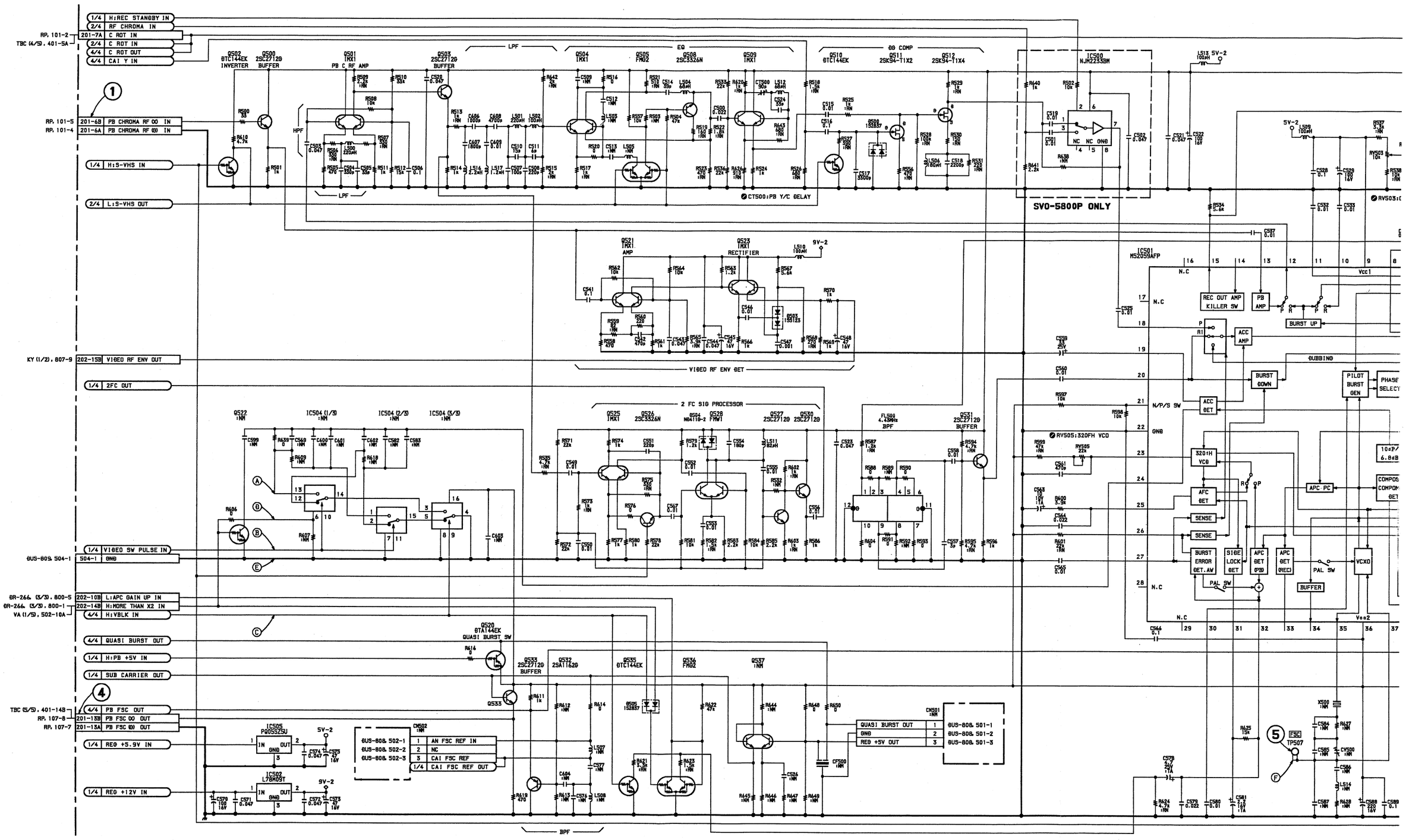

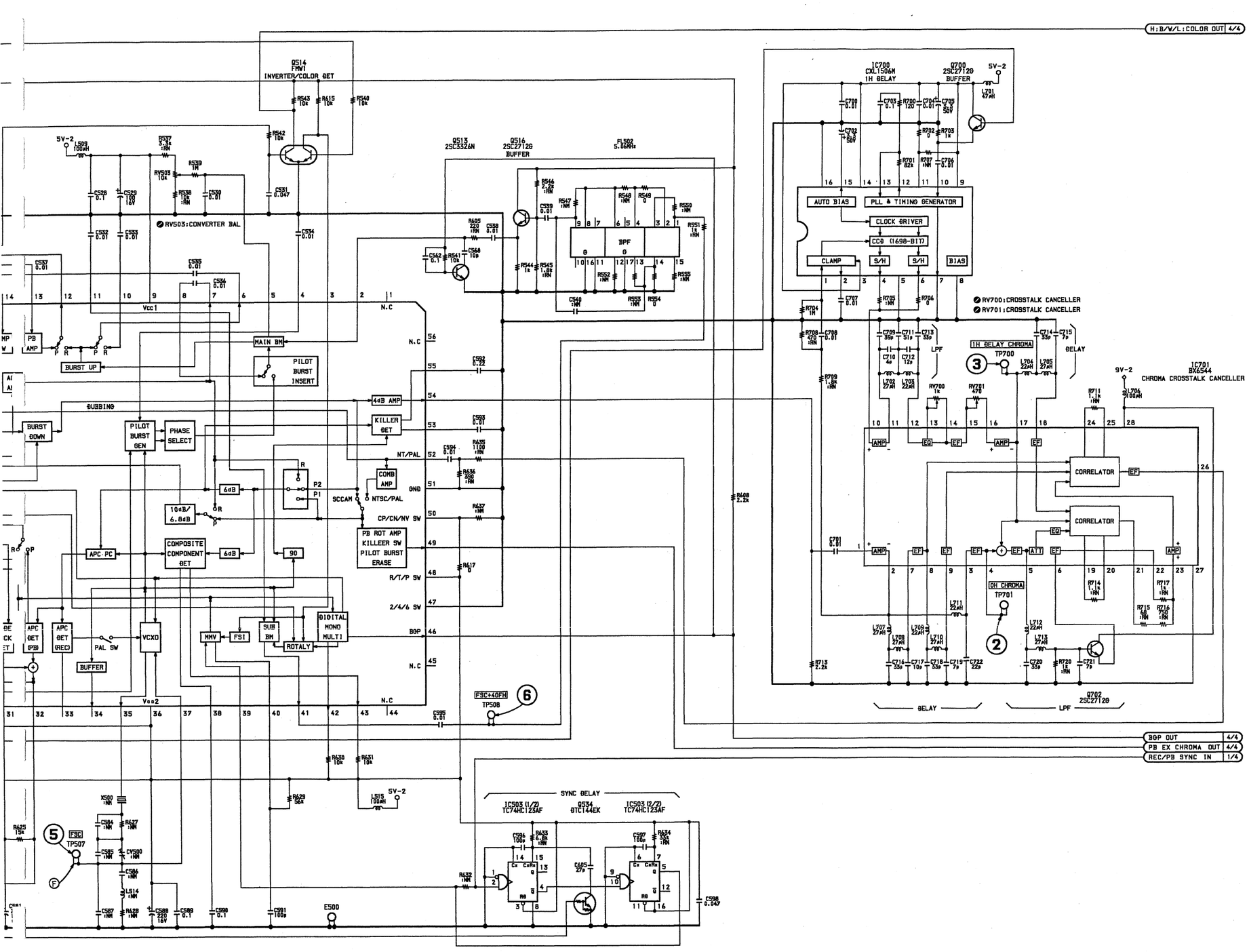

VO-47 (3/4)

1-653-694-11 (1)
SVO-5800P
SVP-5600P

VO-47 (4/4) ; VIDEO MOD/DEMOD & CHROMA PROCESS

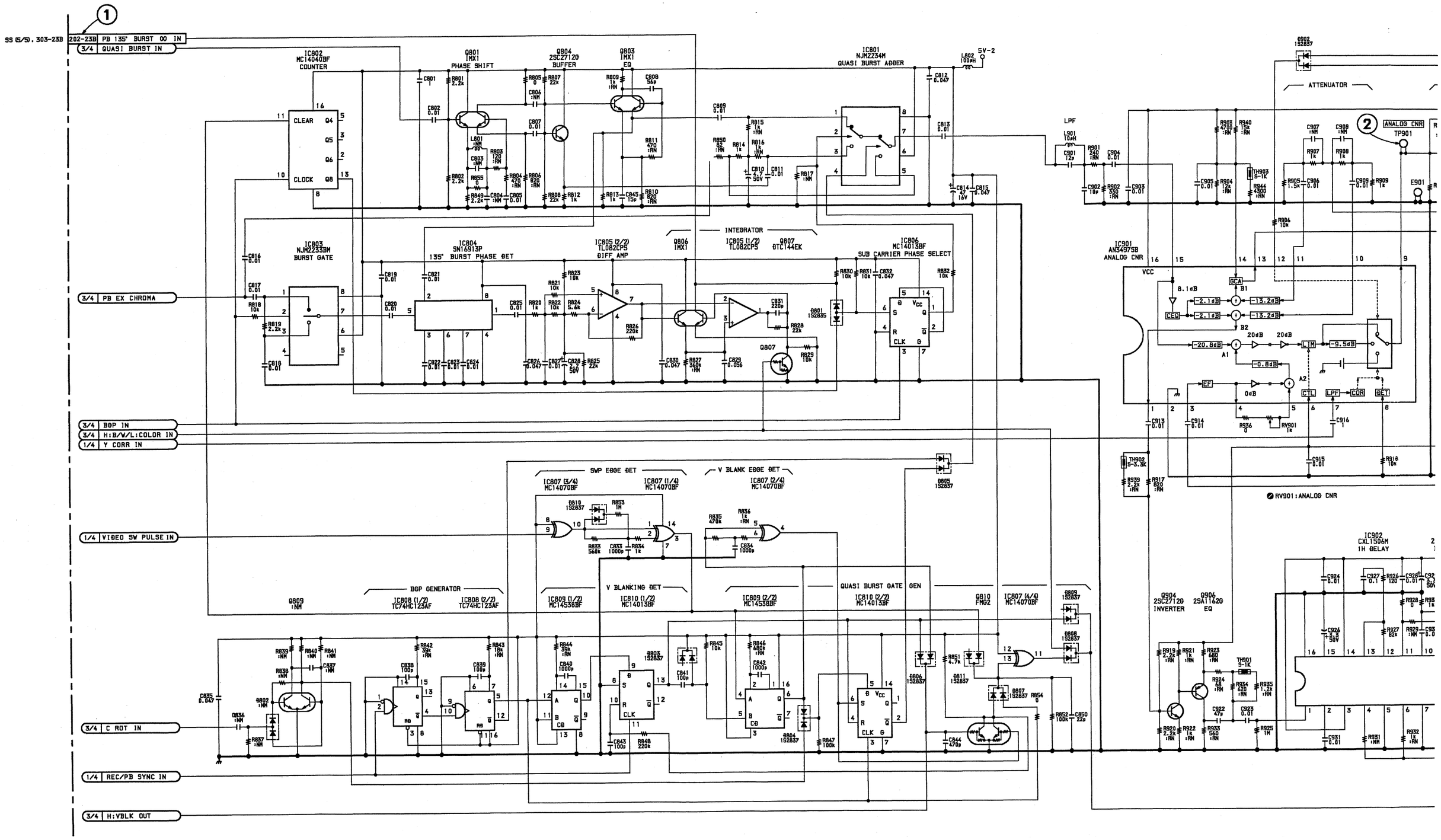

14-13 (P) 14-13 (P)

A B C D E F G H

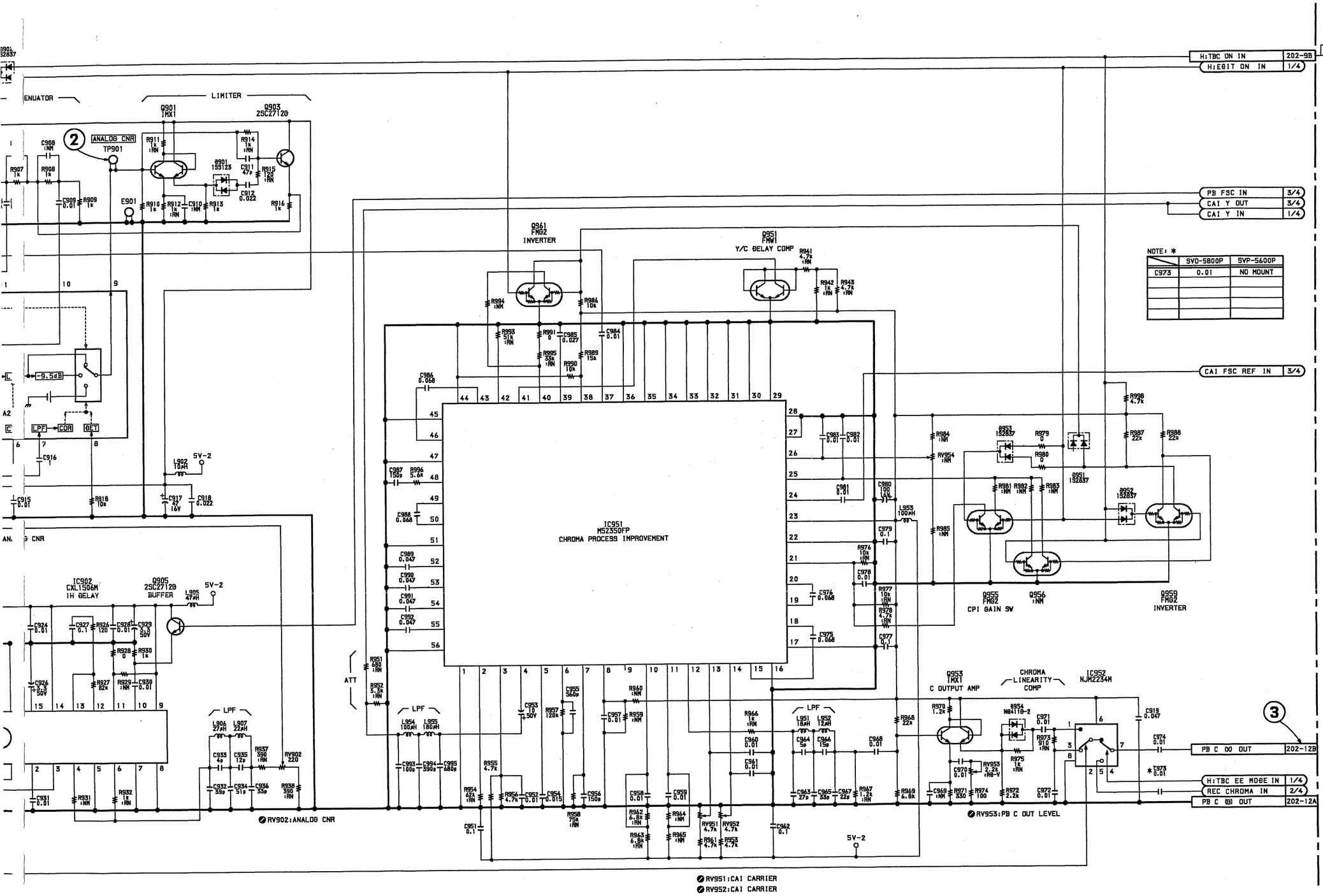

NOTE: *

	SVO-5800P	SVP-5600P
C973	0.01	NO MOUNT

<PAL>

① CN202-23B pin PB (S-VHS) mode

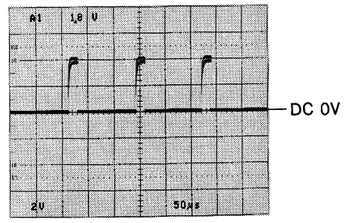

② TP901 (C-2) PB mode

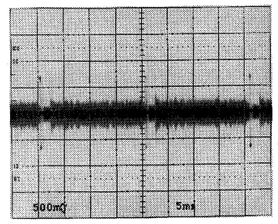

③ CN202-12B pin PB mode

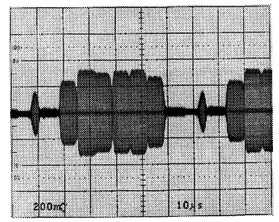

Measurement Condition

PB (S-VHS) mode: KRV-45HPS

VO-47 (4/4)

1-653-694-11 (1)
SVO-5800P
SVP-5600P

TBC-30 ; TIME BASE CORRECTOR & DIGITAL NOISE REDUCER

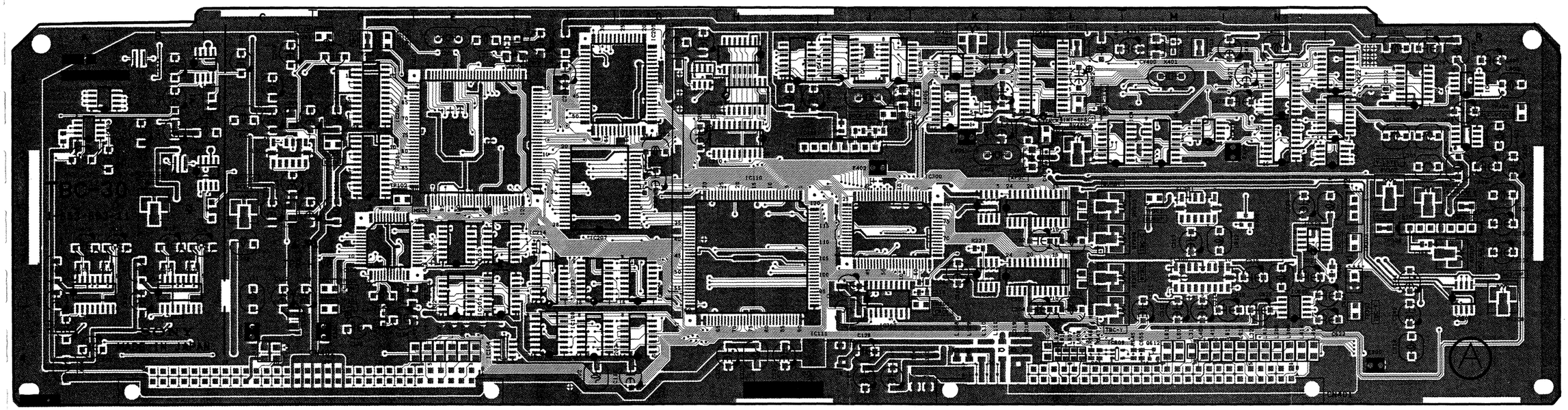

TBC-30 — A SIDE —
1-653-693-11 (1)
SVO-5800/5800P
SVP-5600/5600P

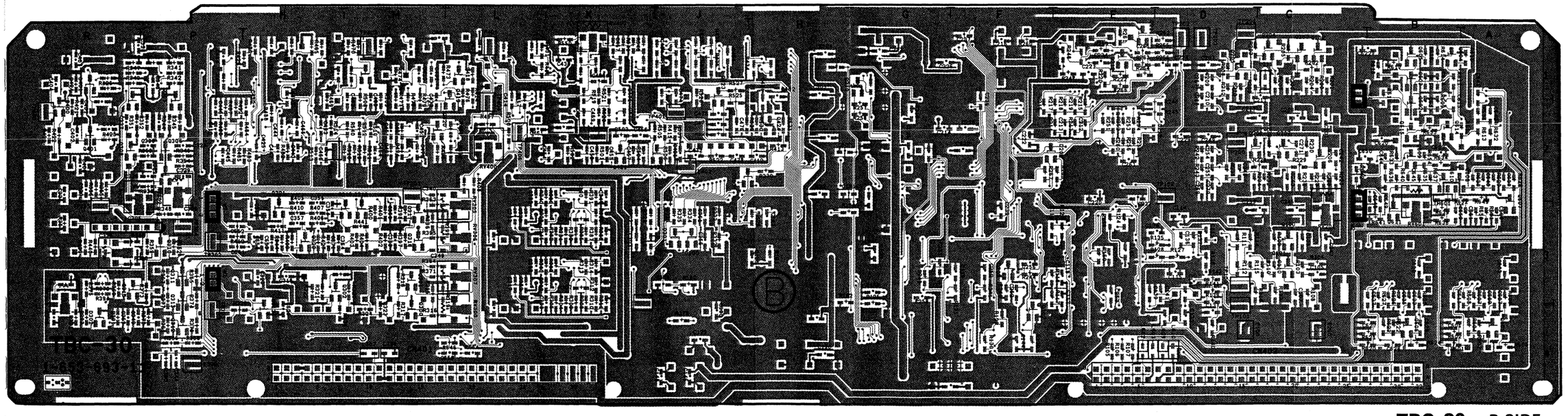

TBC-30 — B SIDE —
1-653-693-11 (1)
SVO-5800/5800P
SVP-5600/5600P

TBC-30 (1-6

CN401
CN402

CV100
CV200
CV400
CV401
CV402

D104
D201
D202
D203
D300
D301
D302
D303
D401
D404
D405
D406

E100
E200
E300
E400
E401
E402

FL201
FL300
FL301
FL601
FL602

IC100
IC101
IC102
IC103
IC104
IC108
IC109
IC110
IC111
IC112
IC200
IC201
IC202 P
IC203 P
IC204
IC205
IC207
IC208
IC209
IC210
IC211
IC213
IC214
IC300
IC301
IC302
IC303
IC304
IC305
IC306
IC307
IC308
IC309
IC403

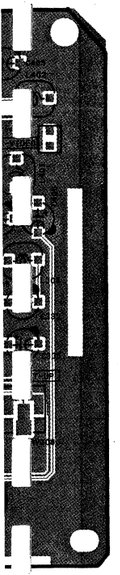

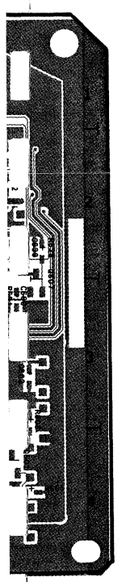

TBC-30 (1-653-693-11)

CN401	M-4	IC405	N-2	Q424	H-2 *
CN402	D-4	IC406	K-2	Q601	A-4 *
		IC407	P-2	Q602	B-2 *
CV100	D-3	IC408	K-2	Q603	B-1 *
CV200	F-1	IC409	J-2	Q604	B-1 *
CV400	M-1	IC411	N-2	Q605	B-1 *
CV401	L-2	IC412	M-2	Q606	B-4 *
CV402	J-1	IC413	L-2	Q607	A-2 *
		IC414	H-1	Q608	B-2 *
D104	D-4	IC415	K-1	Q609	B-2 *
D201	E-1	IC416	J-1	Q610 P	B-2 *
D202	F-2 *	IC417	M-2	Q611	B-3 *
D203	F-3 *	IC418	M-2	Q612	M-4
D300	J-3 *	IC422	P-1	Q613	N-4 *
D301	J-3 *	IC423	P-2	Q614	B-2 *
D302	R-4 *	IC424	R-2	Q615	B-2 *
D303	J-2 *	IC425	R-1		
D401	R-1 *	IC601	A-3	RV201	C-3
D404	M-1	IC602	B-2	RV300	L-4
D405	L-2	IC603	A-2	RV301 P	R-2
D406	K-1	IC604	B-1	RV302 P	P-2
		IC605	N-4	RV303	R-3
E100	D-4	IC606	B-3	RV305	L-3
E200	C-4	IC607	B-2	RV306	L-3
E300	P-4	IC608	P-3	RV307	L-3
E400	N-2	IC609	L-4	RV308	R-3
E401	K-2			RV400	L-2
E402	J-2	Q100	C-3 *	RV402	K-1
		Q101	C-3 *	RV601 P	B-3
FL201	C-2	Q102	F-4 *		
FL300	M-3	Q202	C-1 *	TH401 P	K-1 *
FL301	M-3	Q203	C-1 *	TH601 P	B-2 *
FL601	B-1	Q204	C-1 *	TP100	D-3
FL602	B-2	Q205	D-1 *	TP101	D-4
		Q206	C-2 *	TP102	D-2
IC100	D-3	Q207	C-2 *	TP200	D-2
IC101	F-4	Q208	D-2 *	TP201	D-1
IC102	E-4	Q210	G-1 *	TP202	D-1
IC103	F-3	Q211	E-1 *	TP203	D-1
IC104	E-4	Q212	E-1 *	TP300	K-3
IC108	F-4	Q300	M-4 *	TP301	M-2
IC109	F-4	Q301	M-3 *	TP302	P-3
IC110	H-3	Q302	N-3 *	TP303	P-4
IC111	J-4	Q305	P-1 *	TP304	P-3
IC112	E-3	Q306	P-2 *	TP305 P	R-3
IC200	D-2	Q307 P	R-1 *	TP400	R-2
IC201	E-2	Q308 P	R-2 *	TP401	J-2
IC202 P	G-3	Q309 P	P-2 *	TP403	M-1
IC203 P	G-4	Q310	P-3 *	TP404	L-1
IC204	F-3	Q311	P-3 *	TP405	L-1
IC205	G-1	Q312	P-4 *	TP406	L-2
IC207	G-3	Q313	P-3 *		
IC208	H-1	Q315	R-3 *	X200	E-1
IC209	H-2	Q316	M-3 *	X400	J-1
IC210	H-2	Q317	M-3 *	X401	M-1
IC211	D-2	Q318	M-3 *	X402	K-2
IC213	F-3	Q319	M-3 *		
IC214	F-3	Q320	N-3 *		
IC300	J-3	Q321	N-3 *		
IC301	K-3	Q322	N-3		
IC302	K-3	Q400	R-2 *		
IC303	K-3	Q401	R-2 *		
IC304	R-1	Q417	M-1 *		
IC305	P-3	Q418	L-1 *		
IC306	R-4	Q419	L-1 *		
IC307	G-1	Q420	M-2 *		
IC308	K-3	Q421	K-2 *		
IC309	J-4	Q422	J-2 *		
IC403	K-1	Q423	J-1 *		

* mark ; B SIDE mount
P mark ; SVO-5800P/SVP-5600P only

NOTE :
C311は基板上のシルクの極性とは逆にマウントすること。
C311 is mounted reverse to indicating pole on board.

DUS-812 ; PHASE ERROR DETECTOR/PB 135° PULSE GENERATOR

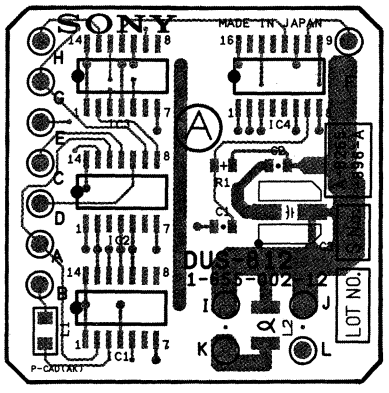

DUS-812 — A SIDE —
1-655-310-11, 12 (1)
SVO-5800P
SVP-5600P

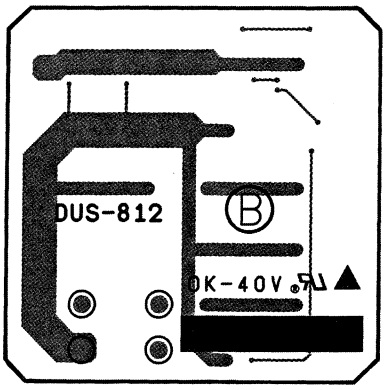

DUS-812 — B SIDE —
1-655-310-11, 12 (1)
SVO-5800P
SVP-5600P

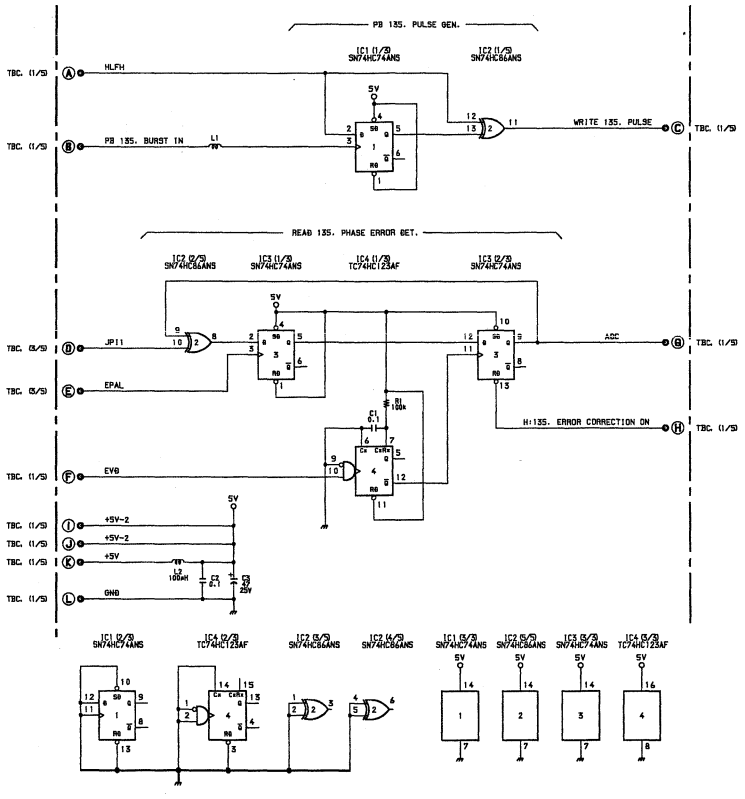

DUS-812

1-655-310-11, 12 (1)
SVO-5800P
SVP-5600P

TBC-30 (1/5) ; TIME BASE CORRECTOR & DIGITAL NOISE REDUCER

<NTSC>
① TP102 (D-2) PB/STOP (E-E) mode

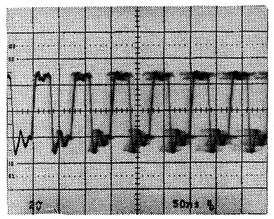

② CN402-2A pin PB/STOP (E-E) mode

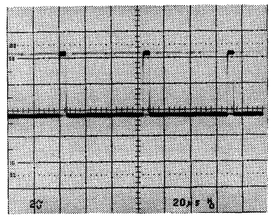

Measurement Condition
S-VIDEO IN : 75 % COLOR BARS
(SETUP 7.5%)
STOP (E-E) mode
PB (S-VHS) mode : KRV-51HN

<PAL>
① TP102 (D-2) PB/STOP (E-E) mode

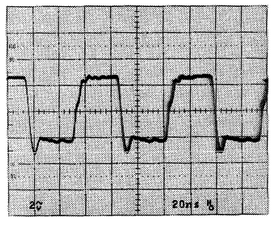

② CN402-2A pin PB/STOP (E-E) mode

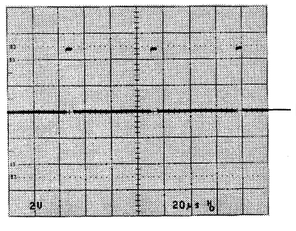

Measurement Condition
S-VIDEO IN : 75 % COLOR BARS
STOP (E-E) mode
PB (S-VHS) mode : KRV-45HPS

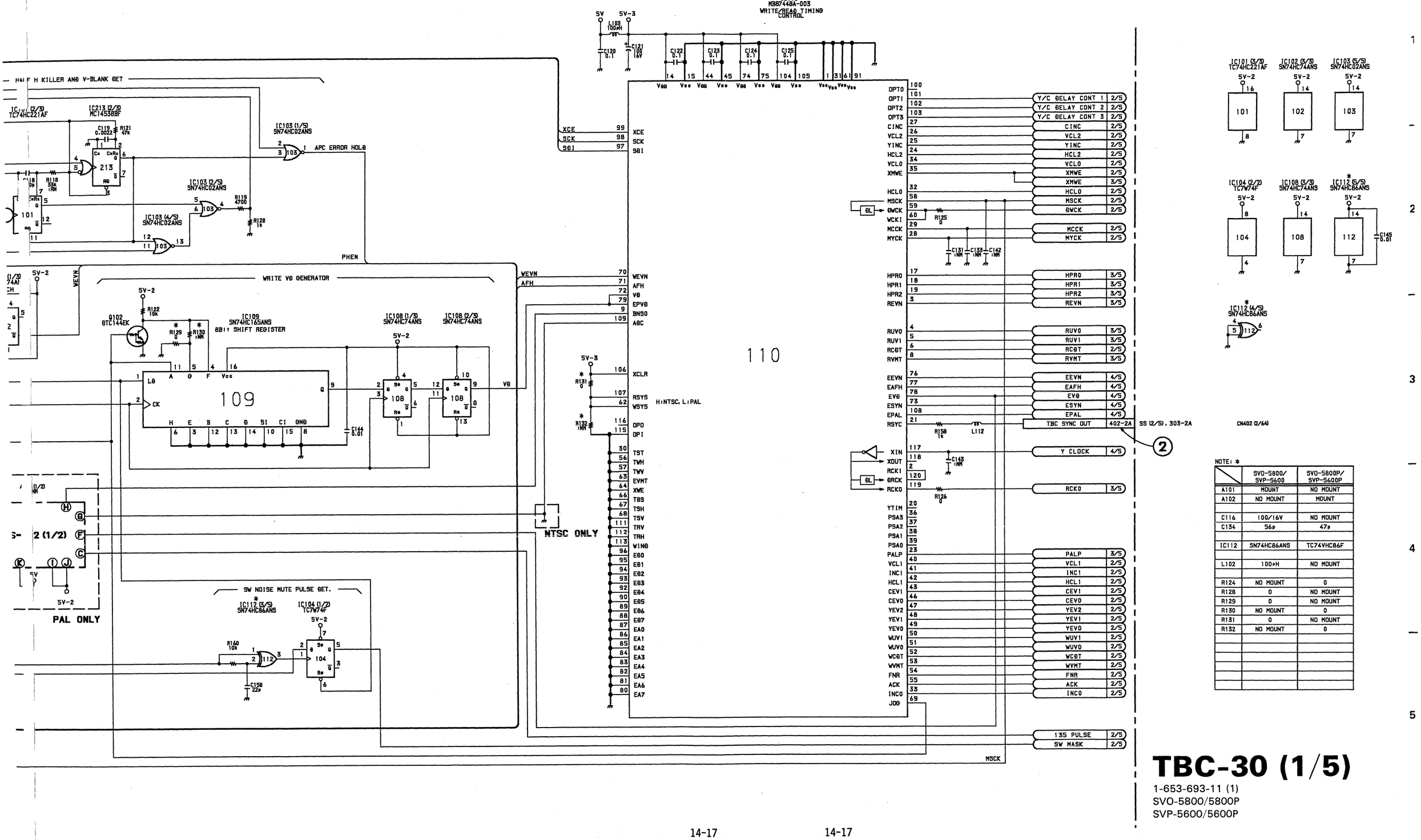

NOTE: *

	SVO-5800/ SVP-5600	SVO-5800P/ SVP-5600P
A101	MOUNT	NO MOUNT
A102	NO MOUNT	MOUNT
C116	100/16V	NO MOUNT
C134	56p	47p
IC112	SN74HC86ANS	TC74VHC86F
L102	100μH	NO MOUNT
R124	NO MOUNT	0
R128	0	NO MOUNT
R129	0	NO MOUNT
R130	NO MOUNT	0
R131	0	NO MOUNT
R132	NO MOUNT	0

TBC-30 (1/5)

1-653-693-11 (1)
SVO-5800/5800P
SVP-5600/5600P

TBC-30 (2/5) ; TIME BASE CORRECTOR & DIGITAL NOISE REDUCER

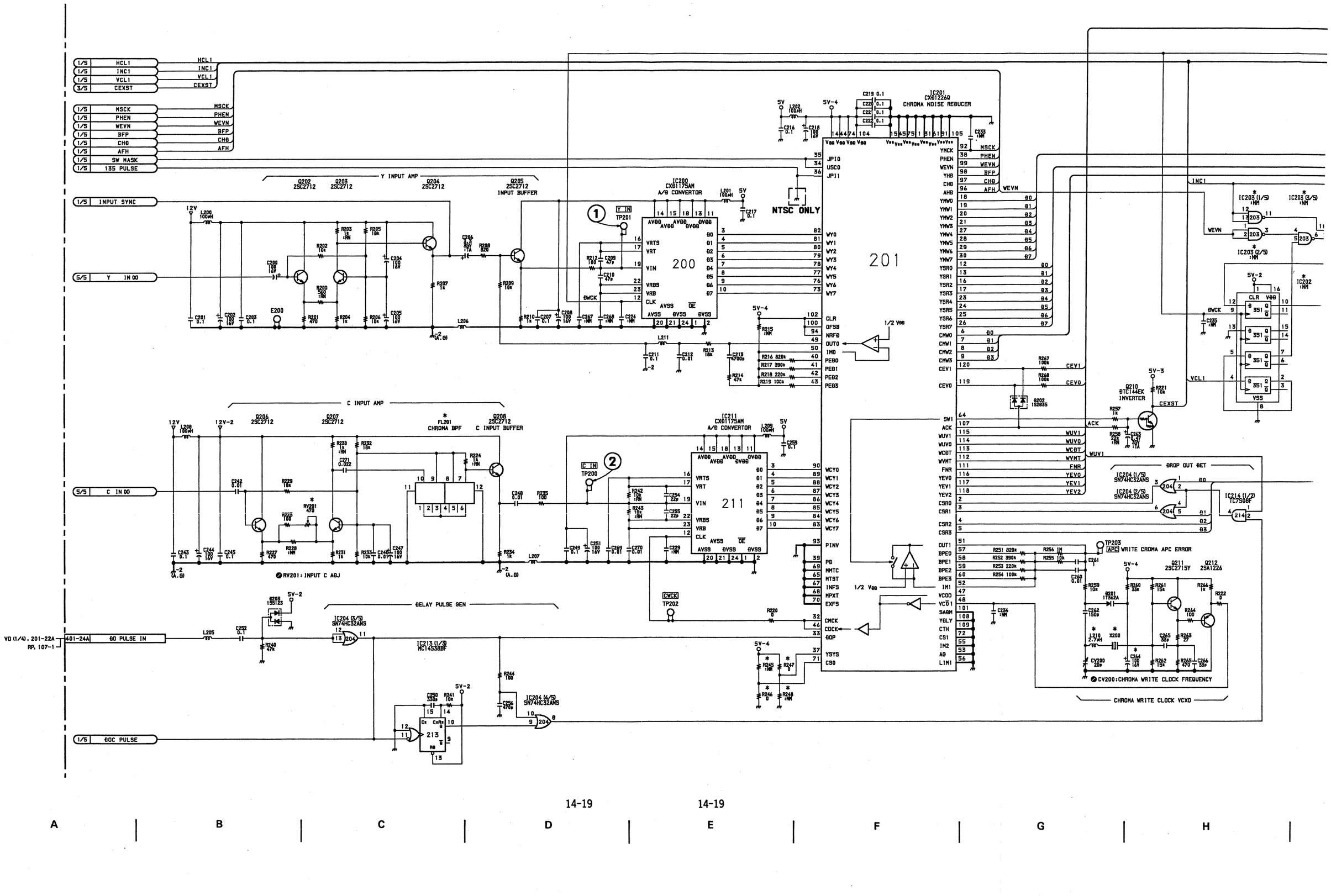

14-19 14-19

A | B | C | D | E | F | G | H

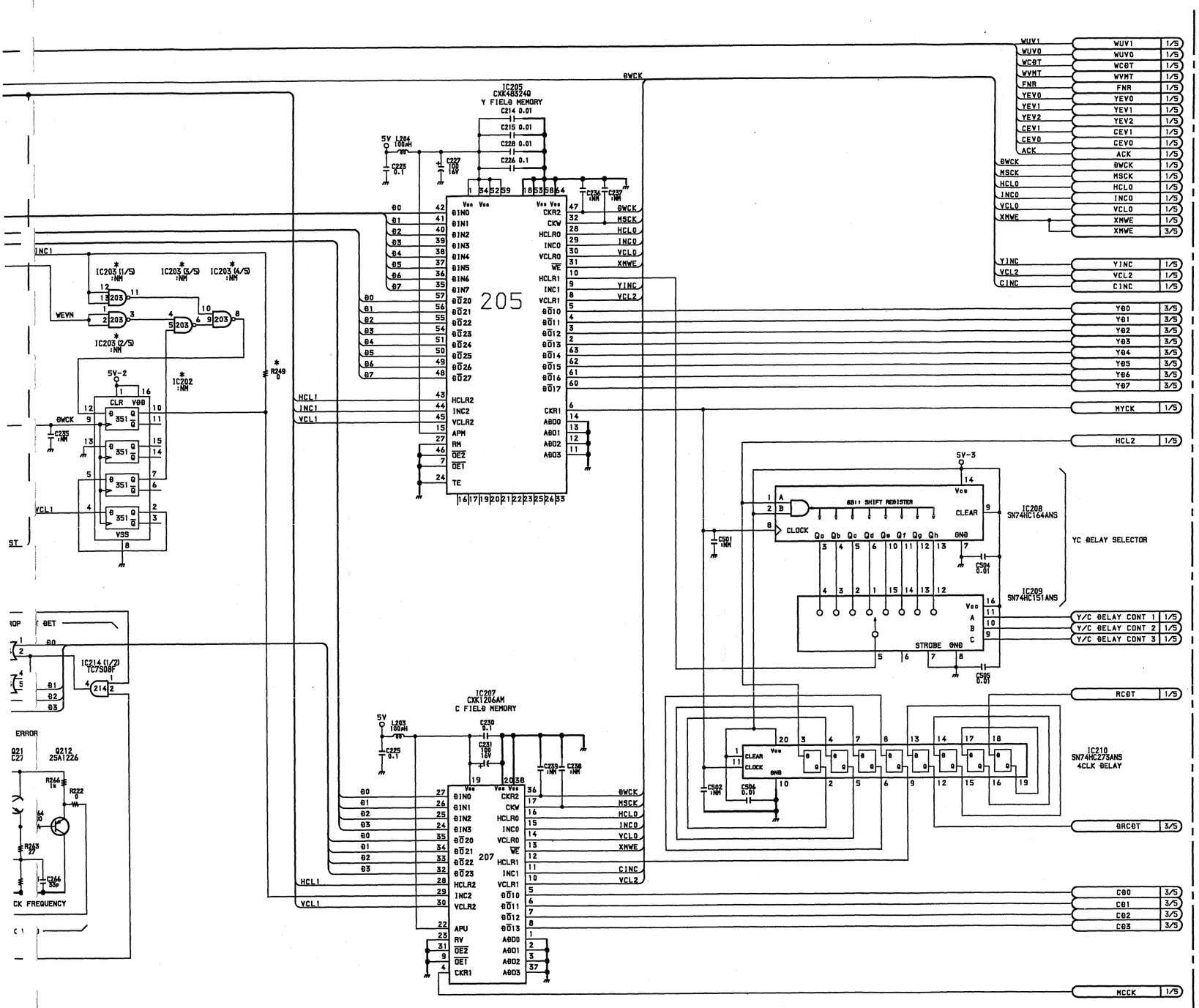

NOTE: *

	SVO-5800/ SVP-5600	SVO-5800P/ SVP-5600P
C264	100/16V	10/50V
FL201	1-239-979-21	1-239-975-21
IC202	NO MOUNT	SN74HC175ANS
IC203	NO MOUNT	SN74HC00ANS
L210	2.7μH	1.5μH
R245	NO MOUNT	0
R246	0	NO MOUNT
R247	0	NO MOUNT
R248	NO MOUNT	0
R249	0	NO MOUNT
RV201	470	220
X200	1-527-722-91	1-760-457-91

<NTSC>
① TP201 (D-1) PB mode

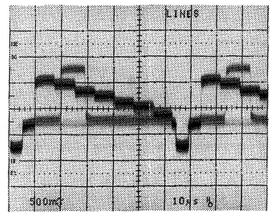

② TP200 (D-2) PB mode

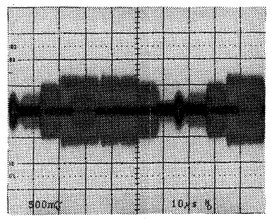

Measurement Condition
PB (S-VHS) mode : KRV-51HN

<PAL>
① TP201 (D-1) PB mode

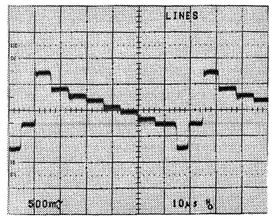

② TP200 (D-2) PB mode

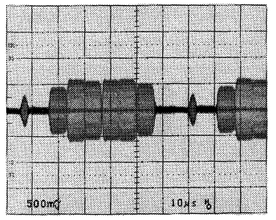

Measurement Condition
PB (S-VHS) mode : KRV-45HPS

TBC-30 (2/5)

1-653-693-11 (1)
SVO-5800/5800P
SVP-5600/5600P

〈NTSC〉

① TP300 (K-3) STOP (E-E) mode

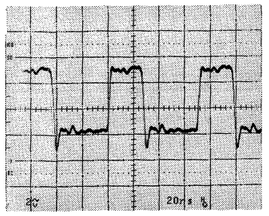

② TP301 (M-2) PB/STOP (E-E) mode

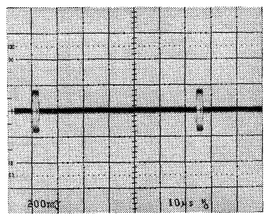

③ TP303 (P-4) PB mode

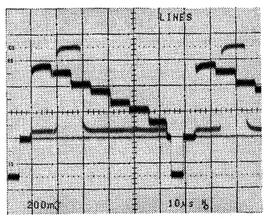

④ TP302 (P-3) PB mode

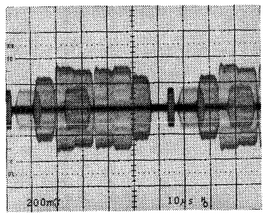

〈PAL〉

① TP300 (K-3) STOP (E-E) mode

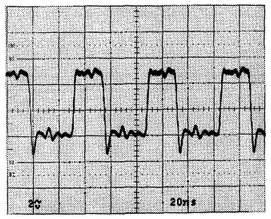

② TP301 PB/STOP (E-E) mode

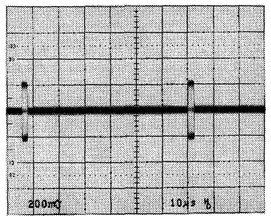

③ TP303 (P-4) PB mode

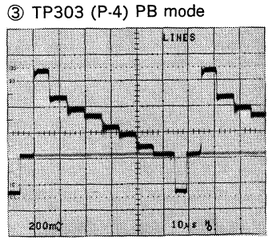

④ TP302 (P-3) PB mode

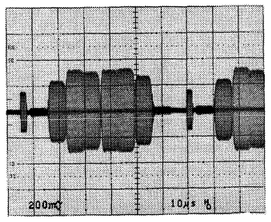

Measurement Condition

S-VIDEO IN : 75 % COLOR BARS
(SETUP 7.5%)
STOP (E-E) mode
PB (S-VHS) mode : KRV-51HN

Measurement Condition

S-VIDEO IN : 75 % COLOR BARS
STOP (E-E) mode
PB (S-VHS) mode : KRV-45HPS

TBC-30 (3/5) ; TIME BASE CORRECTOR & DIGITAL NOISE REDUCER

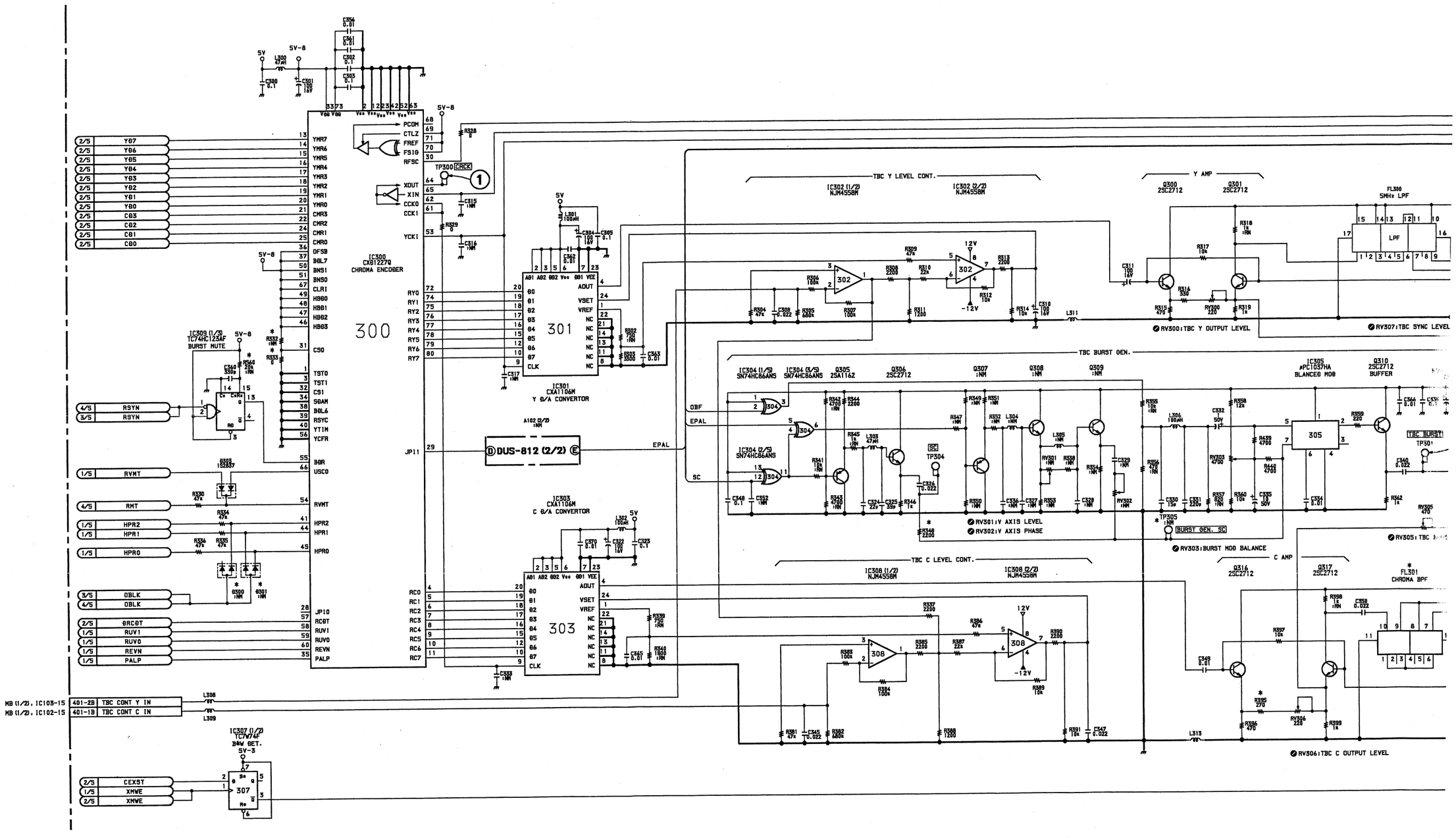

14-21 14-21

A | B | C | D | E | F | G | H

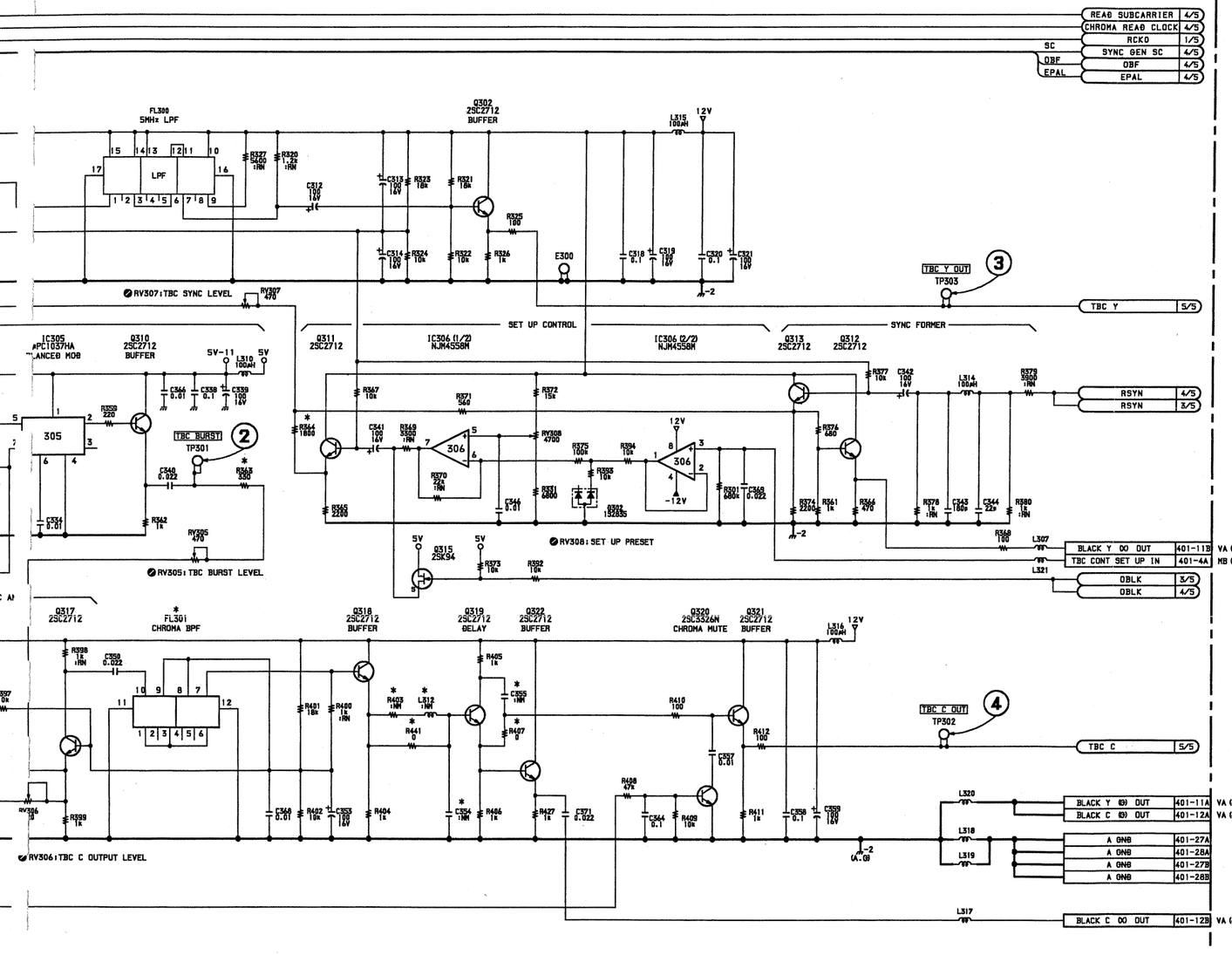

IC309 (2/3) TC74HC123AF

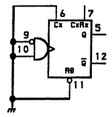

IC309 (3/3) TC74HC123AF

IC304 (5/5) SN74HC86ANS

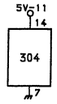

IC307 (2/2) TC7W74F

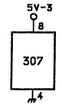

IC412 (3/3) MC14053BF

NOTE: *

	SVO-5800/ SVP-5600	SVO-5800P/ SVP-5600P
C327	NO MOUNT	39p
C328	NO MOUNT	150p
C329	NO MOUNT	0.022
C336	NO MOUNT	22p
C354	NO MOUNT	47p
C355	NO MOUNT	33p
Q300	NO MOUNT	1S2835
Q301	NO MOUNT	1S2835
FL301	1-239-979-21	1-239-975-91
L304	NO MOUNT	47μH
L305	NO MOUNT	22μH
L312	NO MOUNT	8.2μH
Q307	NO MOUNT	2SA1162
Q308	NO MOUNT	2SC2712
Q309	NO MOUNT	2SC2712
R332	NO MOUNT	0
R333	0	NO MOUNT
R338	NO MOUNT	100
R347	NO MOUNT	10k :RN
R348	2200	470
R349	NO MOUNT	4700 :RN
R350	NO MOUNT	4700 :RN
R351	NO MOUNT	2200
R352	NO MOUNT	1k :RN
R353	NO MOUNT	220
R354	NO MOUNT	1k
R363	330	470 :RN
R364	1800	2200
R395	270	330
R403	NO MOUNT	330
R407	0	470
R441	0	NO MOUNT
R560	20k :RN	22k :RN
RV301	NO MOUNT	470
RV302	NO MOUNT	470
TP305	NO MOUNT	MOUNT

TBC-30 (3/5)

1-653-693-11 (1)
SVO-5800/5800P
SVP-5600/5600P

TBC-30 (4/5) ; TIME BASE CORRECTOR & DIGITAL NOISE REDUCER

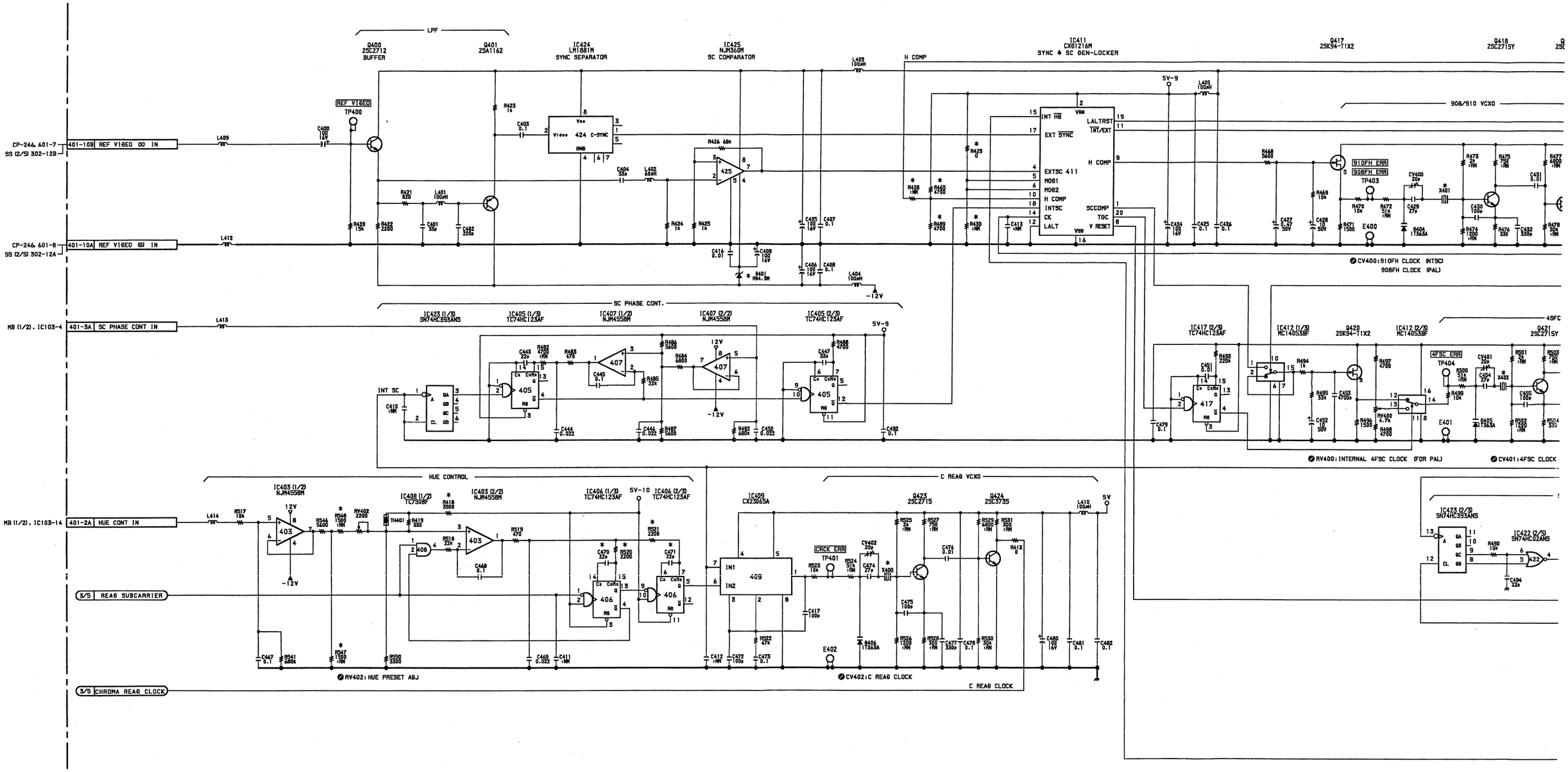

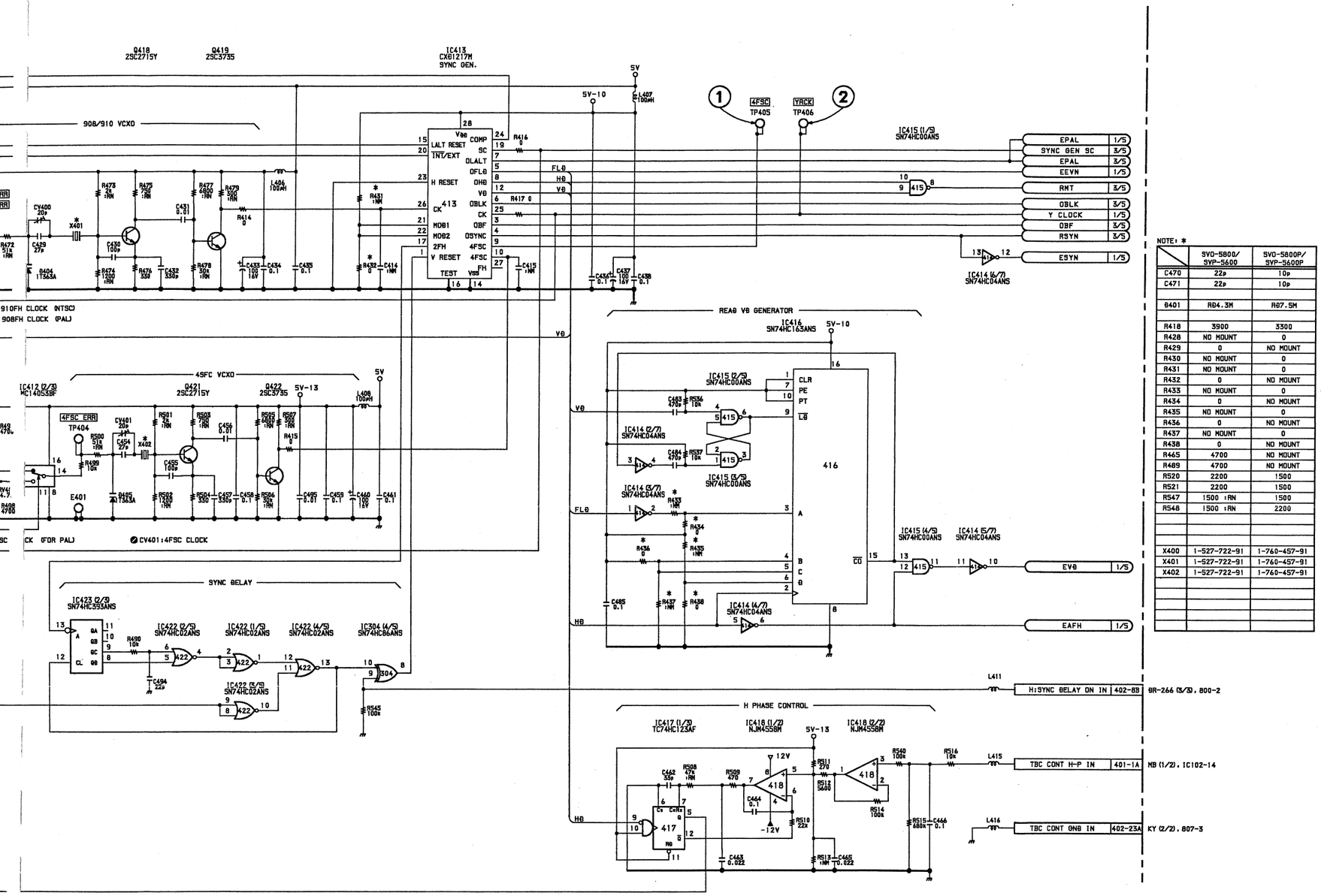

NOTE: *

	SVO-5800/ SVP-5600	SVO-5800P/ SVP-5600P
C470	22p	10p
C471	22p	10p
R401	R04.3M	R07.5M
R418	3900	3300
R428	NO MOUNT	0
R429	0	NO MOUNT
R430	NO MOUNT	0
R431	NO MOUNT	0
R432	0	NO MOUNT
R433	NO MOUNT	0
R434	0	NO MOUNT
R435	NO MOUNT	0
R436	0	NO MOUNT
R437	NO MOUNT	0
R438	0	NO MOUNT
R465	4700	NO MOUNT
R489	4700	NO MOUNT
R520	2200	1500
R521	2200	1500
R547	1500 ±RN	1500
R548	1500 ±RN	2200
X400	1-527-722-91	1-760-457-91
X401	1-527-722-91	1-760-457-91
X402	1-527-722-91	1-760-457-91

<NTSC>
① TP405 (L-1) STOP (E-E) mode

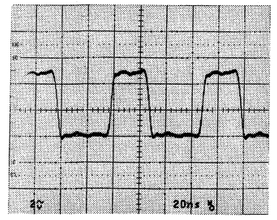

② TP406 (L-2) STOP (E-E) mode

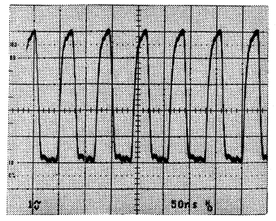

Measurement Condition
S-VIDEO IN : 75 % COLOR BARS
(SETUP 7.5%)
STOP (E-E) mode

<PAL>
① TP405 (L-1) STOP (E-E) mode

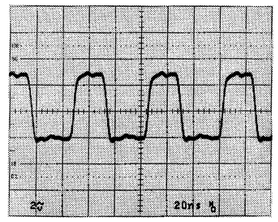

② TP406 (L-2) STOP (E-E) mode

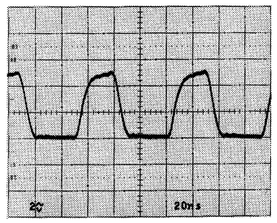

Measurement Condition
S-VIDEO IN : 75 % COLOR BARS
STOP (E-E) mode

TBC-30 (4/5)

1-653-693-11 (1)
SVO-5800/5800P
SVP-5600/5600P

TBC-30 (5/5) ; TIME BASE CORRECTOR & DIGITAL NOISE REDUCER

<NTSC>

① CN402-6B pin PB mode

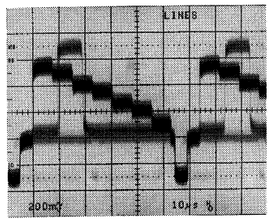

② CN401-14B pin PB/STOP (E-E) mode

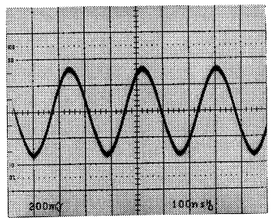

③ CN402-7B pin PB mode

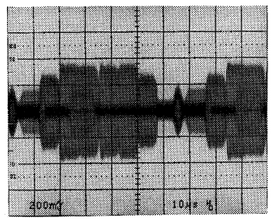

④ CN401-5A pin PB mode

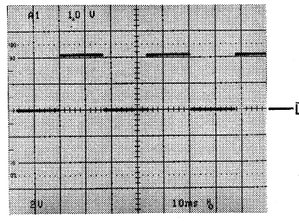

DC 0V

⑤ CN401-22B pin PB mode

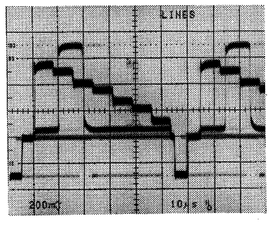

⑥ CN401-23B pin PB mode

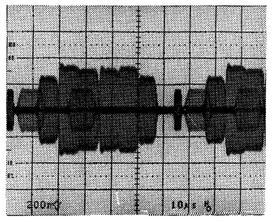

Measurement Condition
S-VIDEO IN : 75 % COLOR BARS
(SETUP 7.5%)
STOP (E-E) mode
PB (S-VHS) mode : KRV-51HN

<PAL>

① CN402-6B pin PB mode

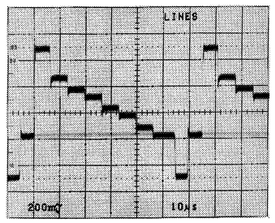

② CN401-14B pin PB/STOP (E-E) mode

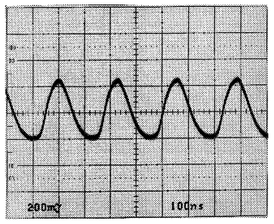

③ CN402-7B pin PB mode

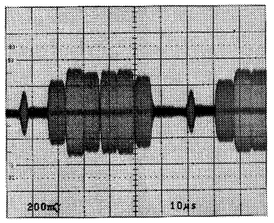

④ CN401-5A pin PB mode

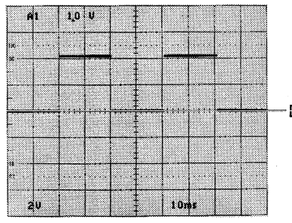

DC 0V

⑤ CN401-22B pin PB mode

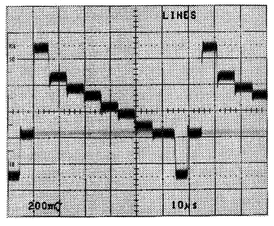

⑥ CN401-23B pin PB mode

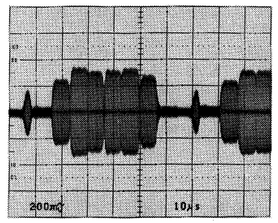

Measurement Condition
S-VIDEO IN : 75 % COLOR BARS
STOP (E-E) mode
PB (S-VHS) mode : KRV-45HPS

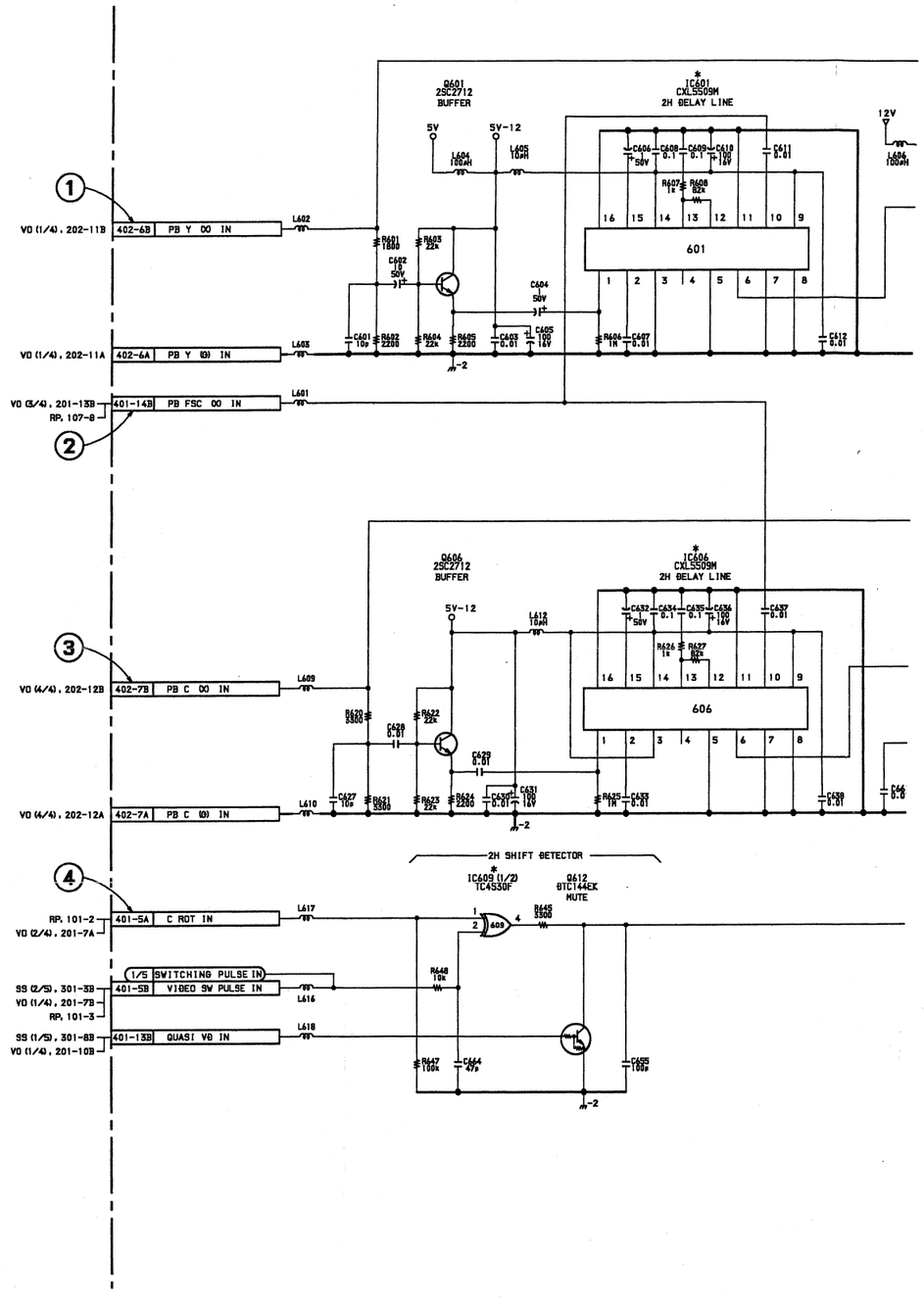

A | B | C | D | E | F | G | H

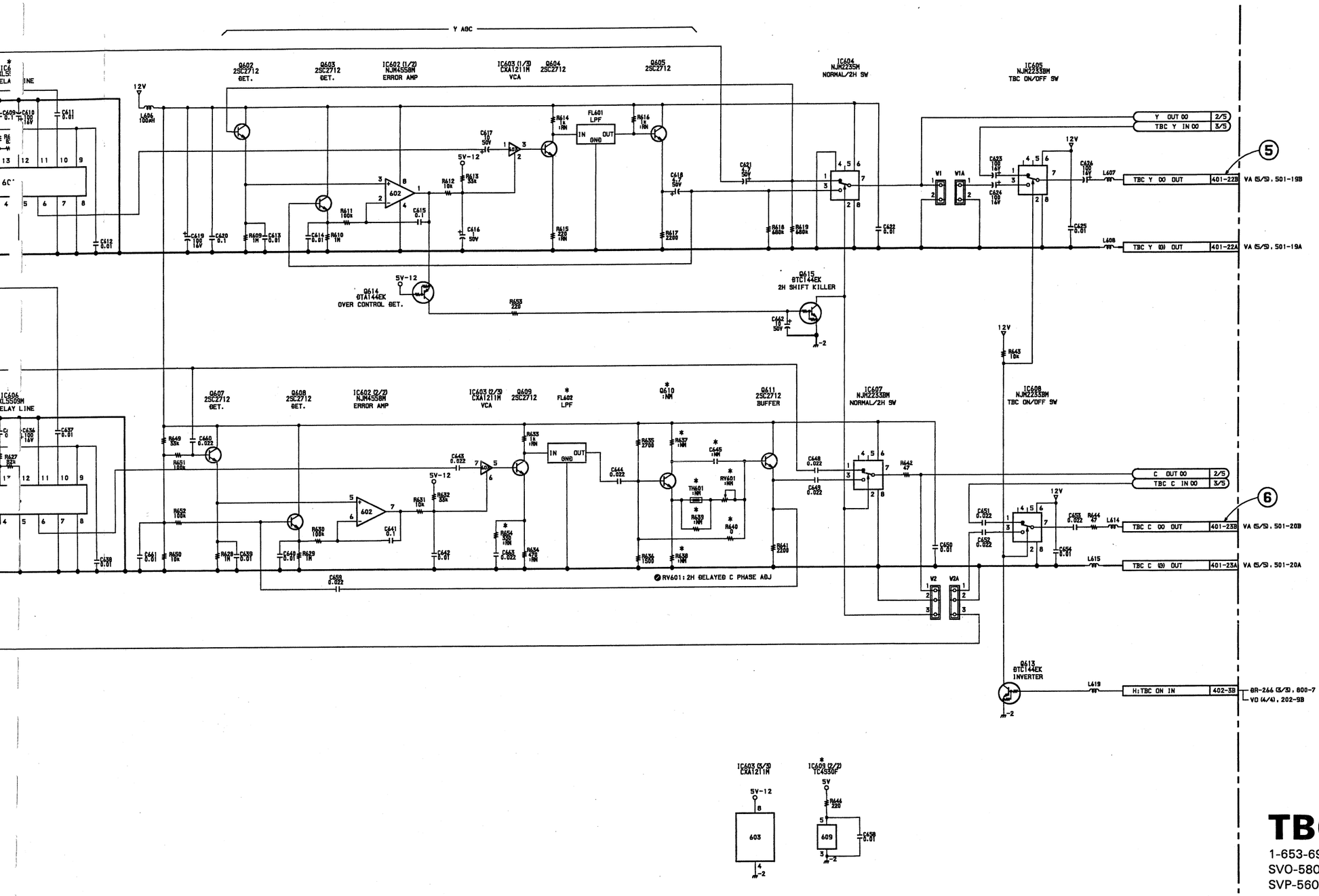

NOTE: *

	SVO-5800/ SVP-5600	SVO-5800P/ SVP-5600P
C645	NO MOUNT	100p
FL602	1-239-010-21	1-236-773-21
IC601	CXL5509M	CXL1506M
IC606	CXL5509M	CXL1506M
Q610	NO MOUNT	2SC2712
R637	NO MOUNT	1k :RN
R638	NO MOUNT	1k :RN
R639	NO MOUNT	220
R640	0	NO MOUNT
R654	330 :RN	300 :RN
RV601	NO MOUNT	1k
TH601	NO MOUNT	1-809-308-21

TBC-30 (5/5)

1-653-693-11 (1)
SVO-5800/5800P
SVP-5600/5600P

VA-148 ; VIDEO PROCESS & OUTPUT AMP

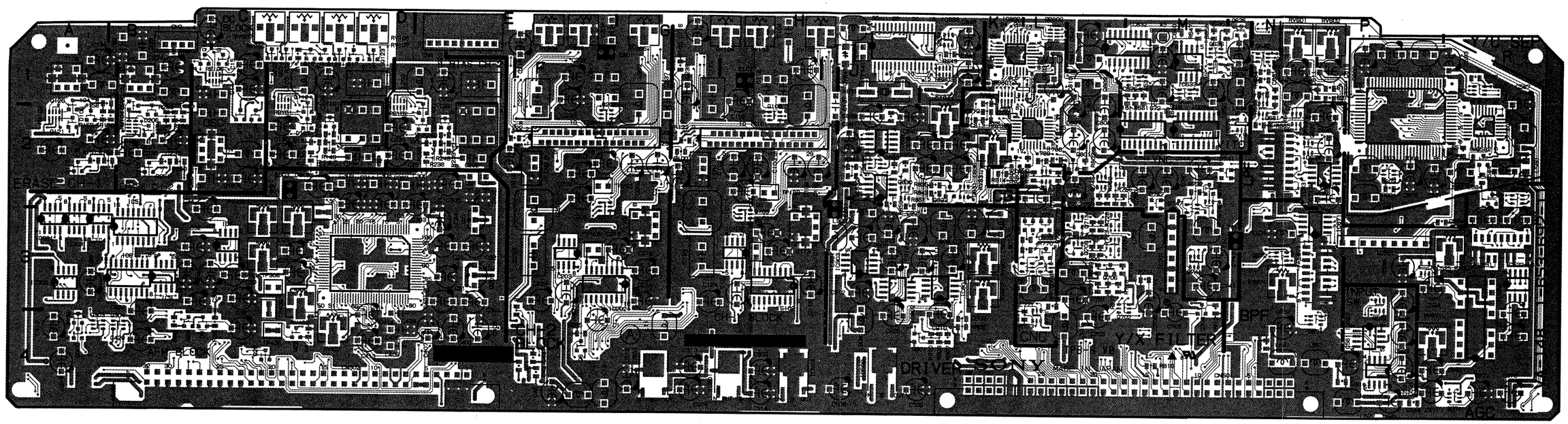

VA-148 — A SIDE —
1-653-692-11 (1)
SVO-5800/5800P
SVP-5600/5600P

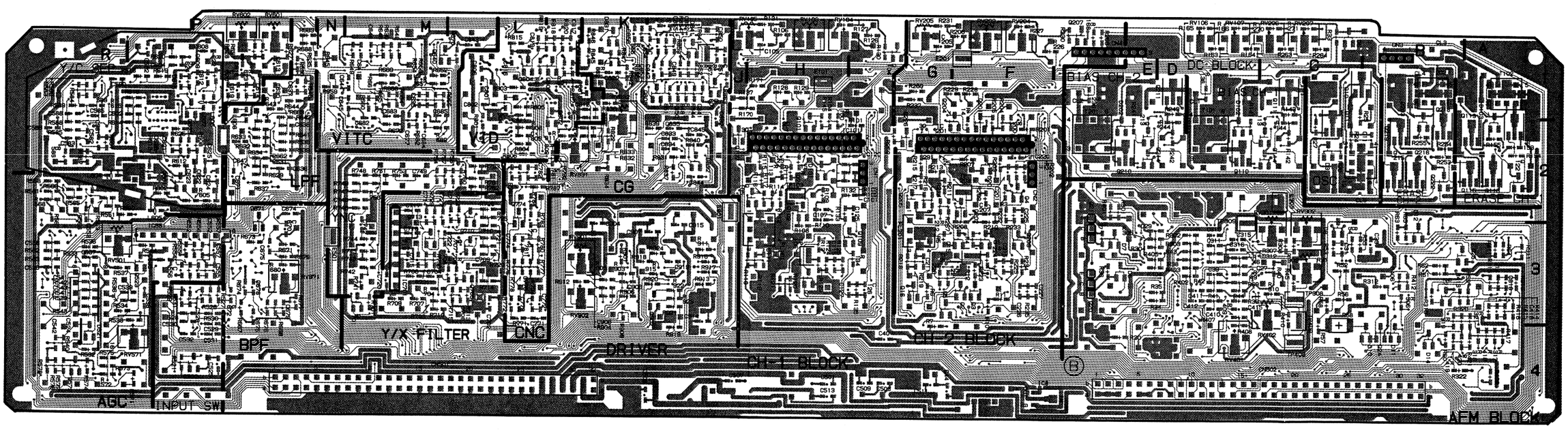

VA-148 — B SIDE —
1-653-692-11 (1)
SVO-5800/5800P
SVP-5600/5600P

VA-148 (1

CN1
CN2
○CN3
○CN4
CN501
CN502

CV841

○D3
○D4
○D5
D6
D7
D8
D9
D10
D11
D12
D14
D101
○D102
○D103
○D104
○D105
○D106
D201
○D202
○D203
○D204
○D205
○D206
○D521
○D671
D741
D742
D771
D772
D831
D832
D841

E101
E201
E303
○E501
E801

FL101
FL201
○FL551
○FL631
○FL671

IC3
IC4
IC5
IC6
IC7
IC8
IC9
IC101
IC102
○IC103
IC201
IC202
○IC203
IC301
IC302

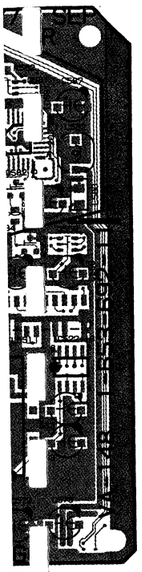

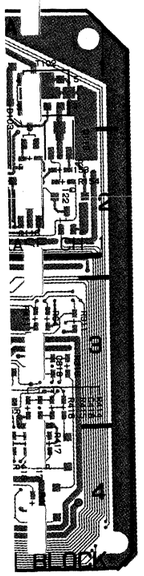

VA-148 (1-653-692-11)

CN1	G-2	IC401	A-3	○Q113	C-2 ＊	Q706	L-3			
CN2	F-2	IC501	H-4	○Q114	C-2 ＊	Q707	L-3 ＊	TP103	H-2	
○CN3	B-1	IC502	J-4	○Q115	A-2 ＊	Q708	L-3	TP105	H-3	
○CN4	E-1	IC503	G-4	○Q116	A-2 ＊	Q709	L-3	TP203	F-2	
CN501	M-4	IC504	H-4	○Q117	A-2	Q710	L-3 ＊	TP205	F-3	
CN502	C-4	○IC521	P-4	○Q118	A-2 ＊	Q711	L-3	TP308	C-3	
		○IC522	R-3	○Q119	A-2 ＊	Q712	L-3	TP309	D-3	
CV841	J-1	○IC523	P-4	○Q120	A-1	Q713	M-3 ＊	TP408	C-4	
		○IC524	R-4	○Q121	A-2	Q741	M-3	TP409	C-3	
○D3	C-2 ＊	○IC525	P-3	○Q122	A-2 ＊	Q744	L-2	TP841	J-1	
○D4	C-2	○IC551	P-3	○Q123	D-1	Q745	L-2			
○D5	C-1 ＊	○IC581	R-2	○Q124	D-1	Q746	M-2	○T2	C-2	
D6	E-3 ＊	○IC601	P-1	◎Q125	H-1 ＊	Q747	M-2	○T101	D-2	
D7	E-3 ＊	○IC631	P-2	Q201	F-2 ＊	Q748	M-2	○T102	A-1	
D8	C-3 ＊	○IC632	L-1	○Q202	F-2 ＊	Q771	L-3	○T201	E-2	
D9	B-4	○IC633	M-1	Q203	F-2	Q773 P	L-3 ＊	○T202	B-1	
D10	B-4 ＊	○IC634	M-1	○Q204	F-2 ＊	Q774	L-3 ＊			
D11	B-4 ＊	○IC671	P-3	○Q205	G-2 ＊	Q775	L-2	X831	J-1	
D12	B-3 ＊	○IC672	M-2	○Q206	F-2	Q776	L-3			
D14	B-4 ＊	○IC674	M-2	○Q207	E-1 ＊	Q777	L-3			
D101	H-2 ＊	○IC675	N-2	○Q209	F-3 ＊	Q778	L-3			
○D102	D-2 ＊	IC701	M-2	○Q210	E-2 ＊	Q801 N	L-2			
○D103	A-2 ＊	IC801 N	L-2	○Q211	D-1 ＊	Q802 N	K-2 ＊			
○D104	D-2	IC802 N	K-1	○Q212	E-1	Q803 N	J-1 ＊			
○D105	C-2	●IC803	L-1	○Q213	E-2 ＊	Q804 N	L-1 ＊			
○D106	A-2	IC831	J-2	○Q214	E-2 ＊	Q805 N	K-1 ＊			
D201	F-2 ＊	IC832	J-2	○Q215	B-2 ＊	Q806	K-2			
○D202	E-2 ＊	IC833	J-1	○Q216	B-2 ＊	Q807	J-1 ＊			
○D203	B-2 ＊	IC901	K-3	○Q217	B-2	○Q830	J-2			
○D204	E-2	IC902	J-3	○Q218	B-2 ＊	Q831	K-2			
○D205	E-2	IC903	J-3	○Q219	B-2 ＊	Q833	K-2			
○D206	B-2			○Q220	B-1	Q834	K-1			
○D521	R-4 ＊	○Q1	F-3 ＊	○Q221	B-2	○Q835	J-2			
○D671	N-3 ＊	Q2	F-3 ＊	○Q222	B-2 ＊	Q901	K-4			
D741	N-2	○Q3	F-3 ＊	◎Q223	G-1 ＊	Q902	J-3 ＊			
D742	M-2	Q4	F-2 ＊	○Q224	C-1					
D771	L-3	Q5	G-3 ＊	○Q225	C-1	○RB101	C-1			
D772	L-3	Q6	F-4	○Q226	G-2 ＊	○RB102	D-1			
D831	K-1 ＊	○Q7	H-3 ＊	Q302	A-4	○RB103	A-2			
D832	J-2 ＊	○Q10	C-1 ＊	Q303	A-4	○RB104	B-2			
D841	J-1 ＊	○Q11	C-2 ＊	Q304	B-4	○RB105	C-1			
		○Q12	C-2	Q402	A-4	RB801	K-1			
E101	H-1	○Q13	C-1	○Q521	P-3	RB802	L-1			
E201	F-1	○Q14	B-1	○Q522	P-4 ＊	RB803	K-1			
E303	C-2	Q15	F-3 ＊	○Q523	P-3 ＊					
○E501	N-3	Q16	G-3 ＊	○Q552	R-2	RV1	C-3			
E801	J-2	○Q17	D-1	○Q553	R-2	RV103	H-1			
		○Q18	D-1	○Q571	R-4	○RV104	H-1			
FL101	H-3	○Q19	C-1	○Q572	R-4 ＊	RV105	H-1			
FL201	G-3	Q20	E-3	○Q581	R-1	○RV106	D-1			
○FL551	R-3	Q21	E-3	○Q582	R-2	○RV107	D-1			
○FL631	N-2	○Q22	C-4	○Q601	P-2 ＊	RV203	F-1			
○FL671	N-3	Q23	B-4	○Q603	P-2	○RV204	F-1			
		Q24	B-4 ＊	○Q605	P-1 ＊	RV205	G-1			
IC3	D-3	Q25	B-3 ＊	○Q631	N-2	○RV206	C-1			
IC4	A-3	Q26	C-4	○Q633	N-2	○RV207	C-1			
IC5	B-3	Q27	B-3 ＊	○Q635	N-1	RV301	C-3			
IC6	B-3	Q101	H-2 ＊	○Q636	M-1	RV302	C-3			
IC7	C-3	○Q102	H-2 ＊	●Q637	M-1	RV401	D-4			
IC8	F-4 ＊	Q103	H-2	○Q638	M-1	RV402	C-3			
IC9	B-3	○Q104	G-1 ＊	○Q640	M-1 ＊	○RV501	R-3			
IC101	G-2	○Q105	H-2 ＊	○Q671	N-3	○RV571	P-4			
IC102	H-3	○Q106	H-2	○Q672	N-3	○RV601	N-1			
○IC103	H-3	○Q107	J-2 ＊	○Q681	N-1	○RV602	P-1			
IC201	F-2	◎Q108	J-1 ＊	○Q682	N-1	○RV671	N-3			
IC202	G-3	○Q109	H-3 ＊	Q701	M-3 ＊	RV831	K-2			
○IC203	F-3	○Q110	D-2 ＊	Q702	M-3	RV832	K-2			
IC301	A-3	○Q111	C-1 ＊	Q704	M-3	RV901	K-3			
IC302	A-3	○Q112	C-1	Q705	L-3 ＊	RV902	K-3			

＊ mark ; B SIDE mount
○ mark ; SVO-5800/5800P only
● mark ; SVO-5800 only
◎ mark ; SVO-5800P only
N mark ; SVO-5800/SVP-5600 only
P mark ; SVO-5800P/SVP-5600P only

NOTE :
C36は基板上のシルクの極性とは逆にマウントすること。
C36 is mounted reverse to indicating pole on board.

VA-148 (1/5), AH-40, AH-28

VA-148 (1/5) ; NORMAL AUDIO PROCESS/LTC AMP
AH-40 ; AUDIO HEAD 〈SVO-5800P〉
AH-28 ; AUDIO HEAD 〈SVP-5600P〉

〈PAL〉
① TP103 (H-2) PB (NORMAL) mode

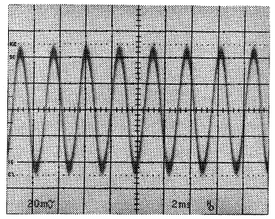

② TP105 (H-3) STOP (E-E)/REC (NORMAL) mode

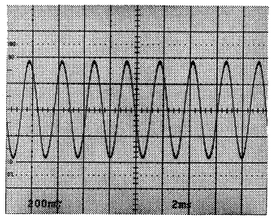

Measurement Condition
AUDIO IN (NORM) : 400 Hz, +4 dBm
STOP (E-E) mode : S-VHS
REC (S-VHS) mode
PB mode : KRV-31PS (NORMAL : 400 Hz)

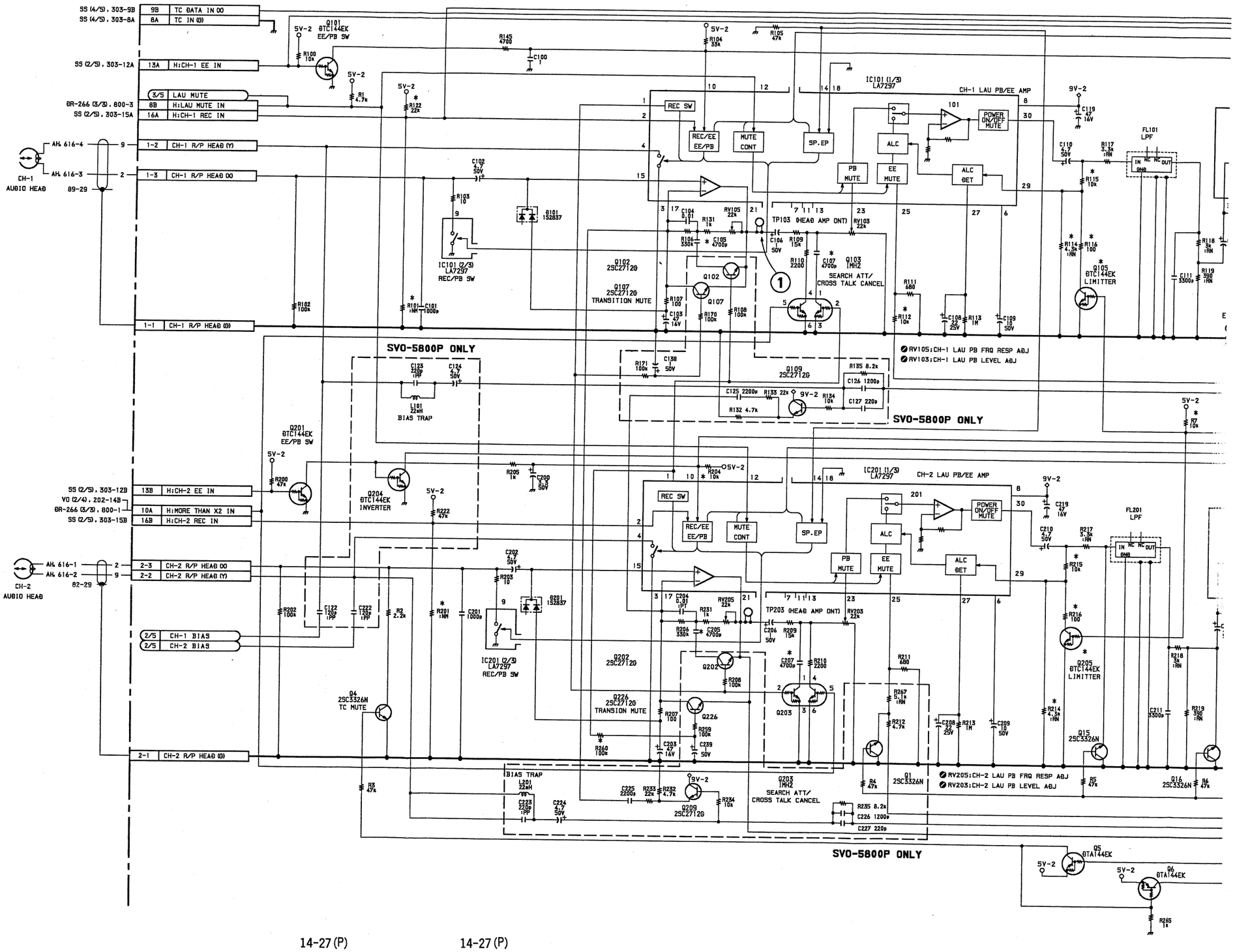

14-27 (P) 14-27 (P)

VA-148 (1/5), AH-40, AH-28

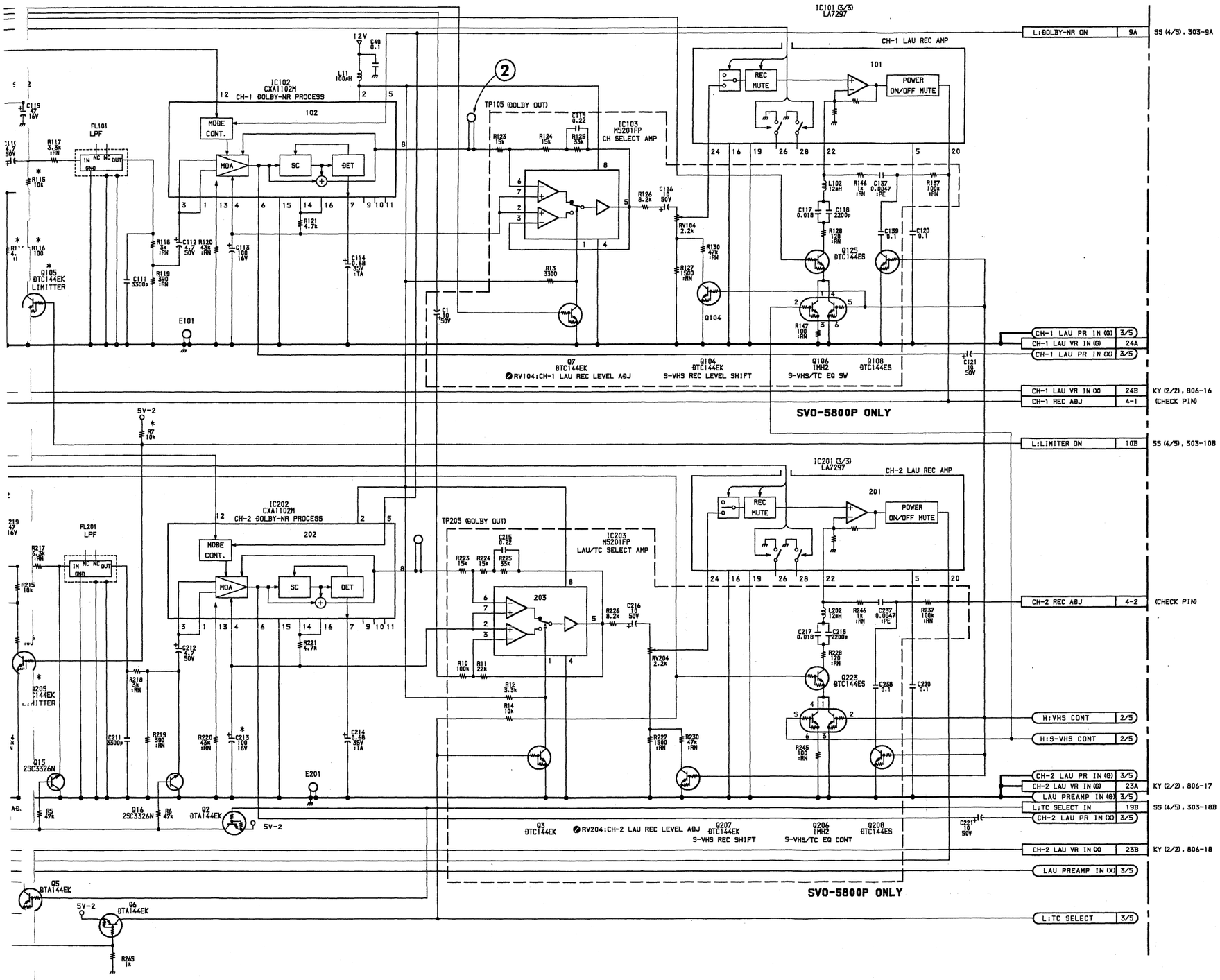

NOTE: *

	SVO-5800P	SVP-5600P
R7	10K	NO MOUNT
R101	NO MOUNT	0
R112	10K	NO MOUNT
R114	4300 :RN	10K
R115	10K	NO MOUNT
R116	100	NO MOUNT
R122	22K	NO MOUNT
R201	NO MOUNT	0
R204	10K	33K
R214	4300 :RN	10K
R215	10K	NO MOUNT
R216	100	NO MOUNT
R260	100K	NO MOUNT
C105	4700P	NO MOUNT
C107	4700P	NO MOUNT
C205	4700P	NO MOUNT
C207	4700P	NO MOUNT
Q105	DTC144EK	NO MOUNT
Q205	DTC144EK	NO MOUNT
A6	MOUNT	NO MOUNT
A7	MOUNT	NO MOUNT

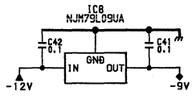

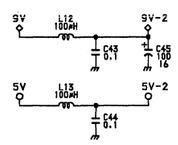

VA-148 (1/5)

1-653-692-11 (1)
SVO-5800P
SVP-5600P

VA-148 (2/5); NORMAL AUDIO PROCESS
AH-40; AUDIO ERASE HEAD

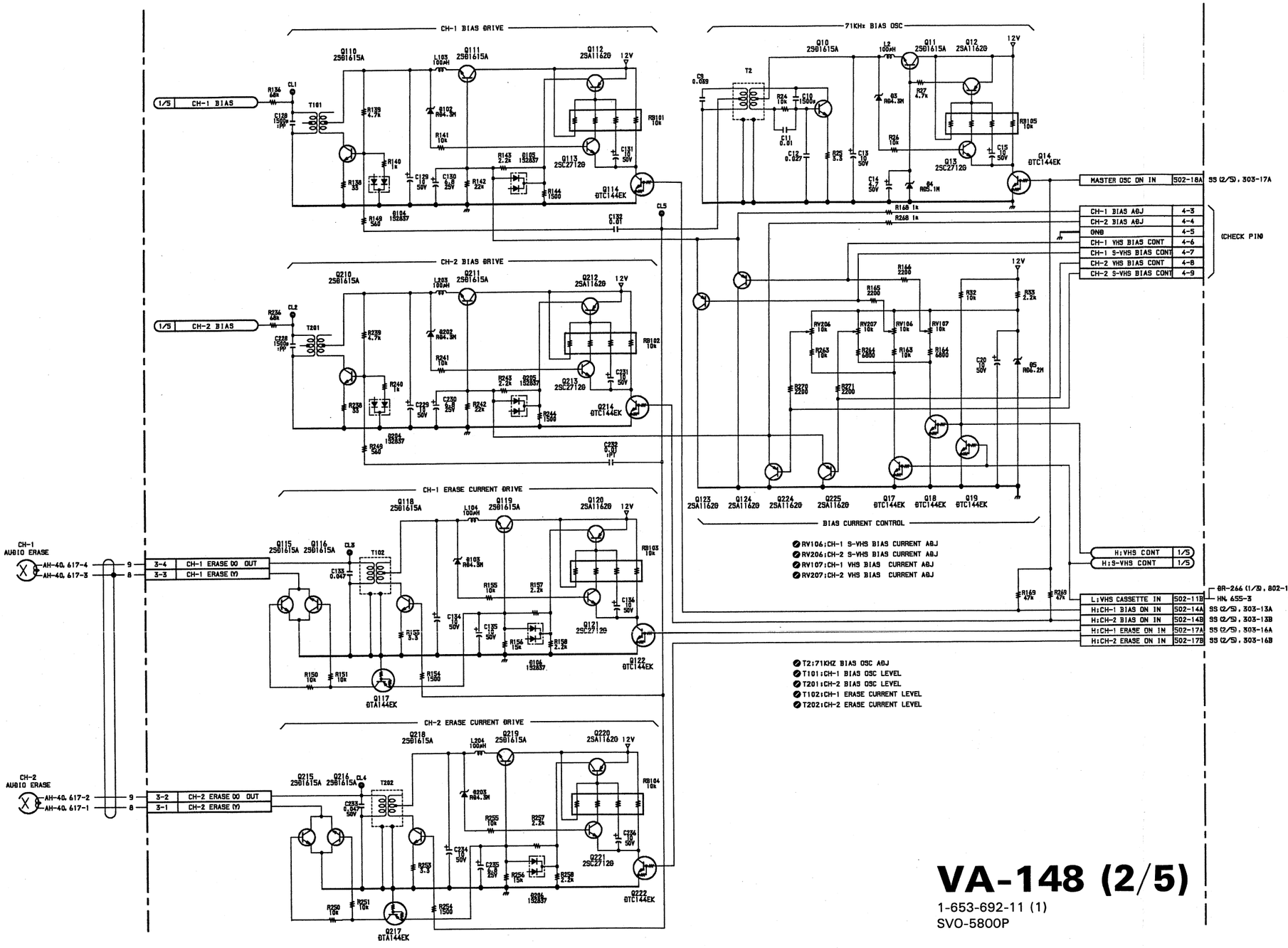

VA-148 (2/5)

1-653-692-11 (1)
SVO-5800P

14-29 (P) 14-29 (P)

A B C D E F G H

<PAL>

① CN502-7B pin PB (Hi-Fi) mode

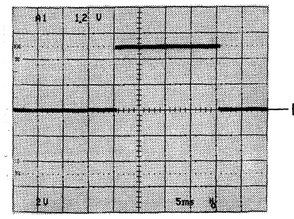

② CN502-5B pin PB (Hi-Fi) mode

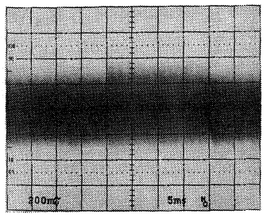

③ TP308 (C-3) STOP (E-E)/REC (Hi-Fi) mode

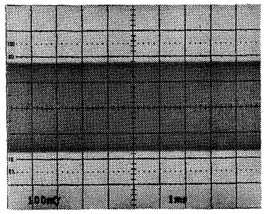

④ CN502-6B pin STOP (E-E)/REC (Hi-Fi) mode

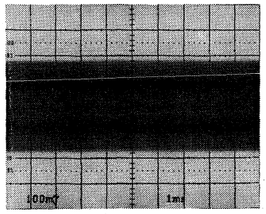

⑤ CN502-27B pin PB (Hi-Fi) mode

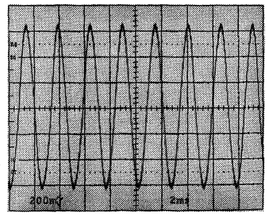

⑥ CN502-29B pin PB (NORMAL) mode

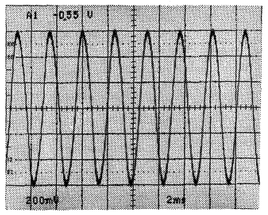

Measurement Condition

AUDIO IN (Hi-Fi) : 400 Hz, +4 dBm
STOP (E-E) mode : S-VHS
REC (S-VHS) mode
PB mode : KRV-31PS (NORMAL : 400 Hz)
PB mode : KRV-35PF (Hi-Fi)

VA-148 (3/5); FM AUDIO PROCESS/NORMAL AUDIO PROCESS

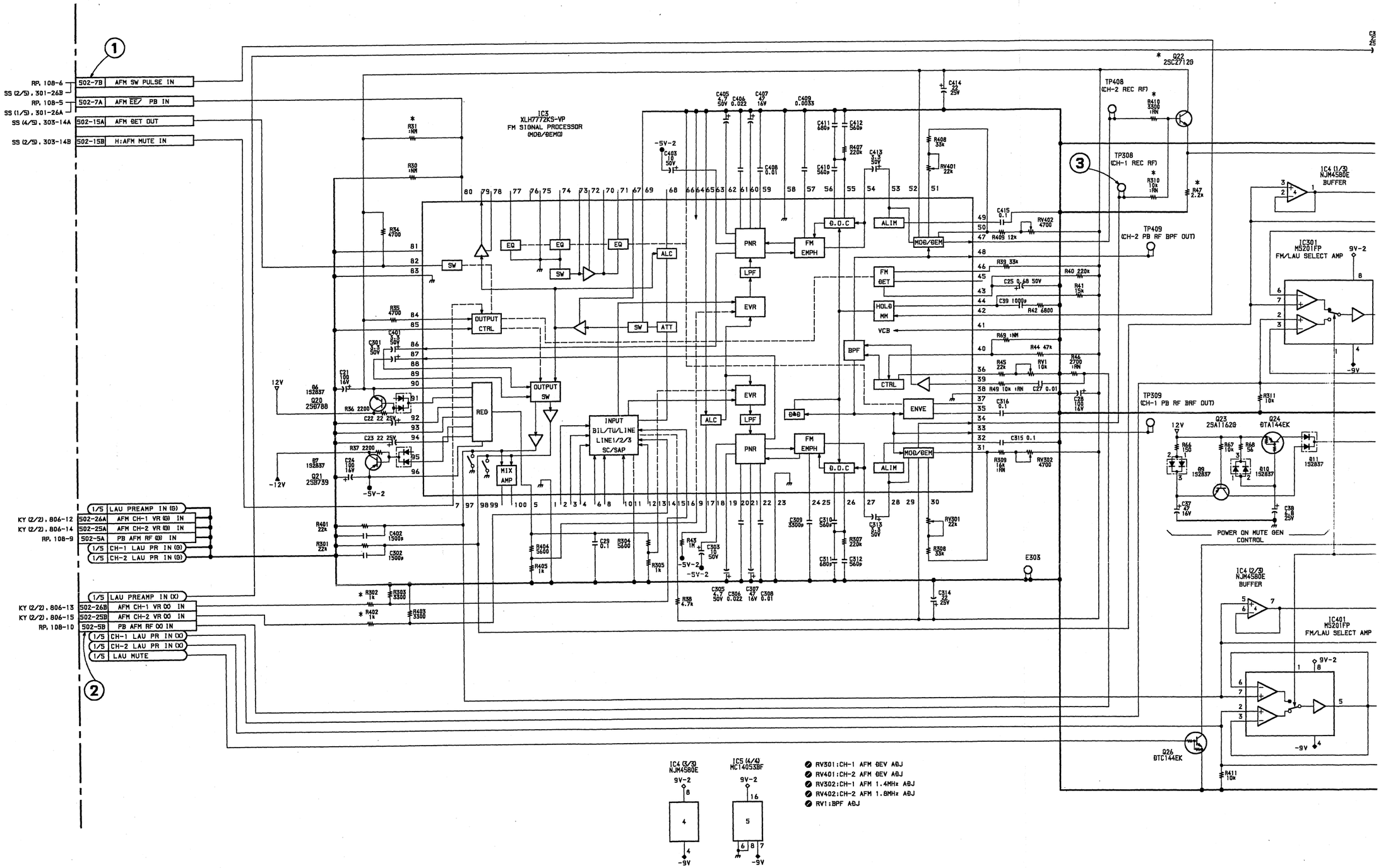

14-31 (P) 14-31 (P)

A B C D E F G H

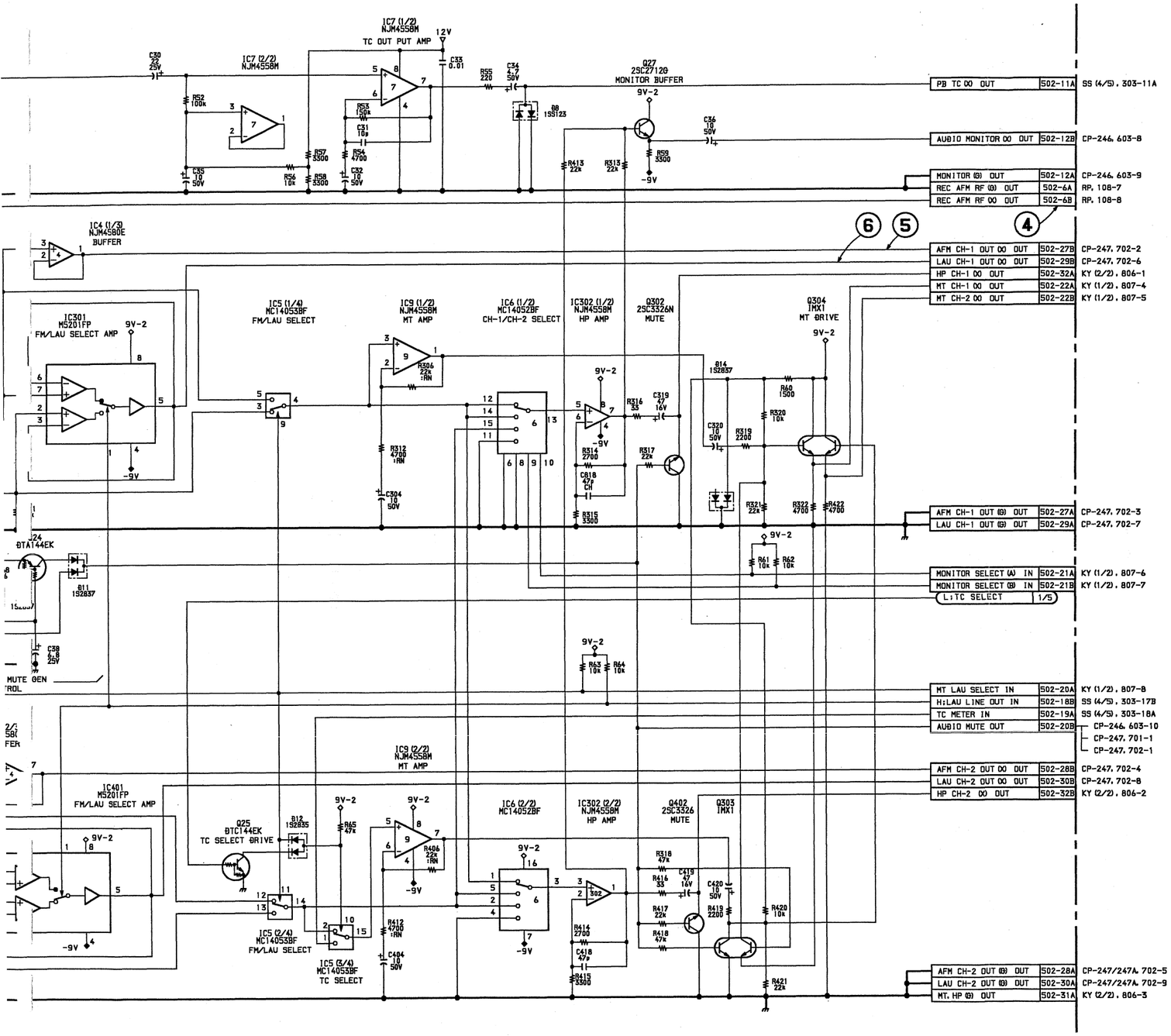

NOTE: *

	SVO-5800P	SVP-5600P
R31	NO MOUNT	1K
R47	2200	NO MOUNT
R502	1K	NO MOUNT
R310	10K :RN	NO MOUNT
R402	1K	NO MOUNT
R410	3300 :RN	NO MOUNT
Q22	2SC2712G	NO MOUNT

VA-148 (3/5)

1-653-692-11 (1)
SVO-5800P
SVP-5600P

14-31 (P) 14-31 (P)

I J K L M N O P

1 2 3 4 5

<PAL>

① CN501-6B pin STOP (E-E) mode

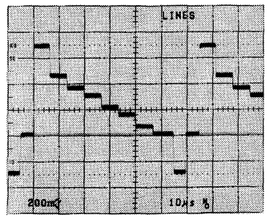

② CN501-9B pin STOP (E-E) mode

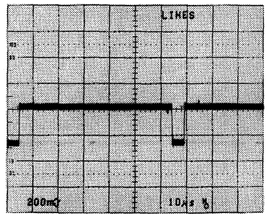

③ CN501-7B pin STOP (E-E) mode

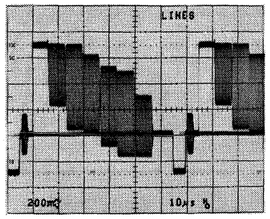

④ CN501-12B pin STOP (E-E) mode

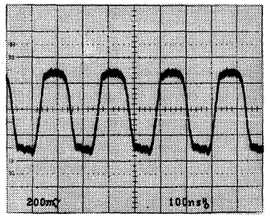

⑤ CN501-5B pin STOP (E-E) mode

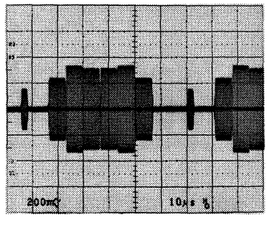

⑥ CN501-10B pin STOP (E-E) mode

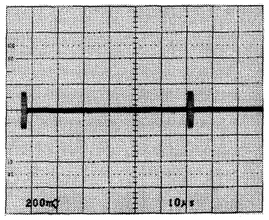

⑦ CN501-4A pin STOP (E-E) mode

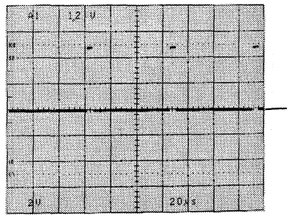

DC 0V

⑧ CN502-4A pin STOP (E-E) mode

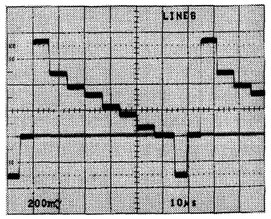

⑨ CN501-16B pin STOP (E-E) mode

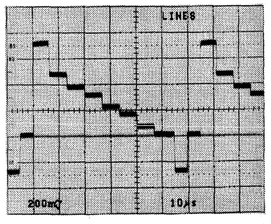

⑩ CN501-15B pin STOP (E-E) mode

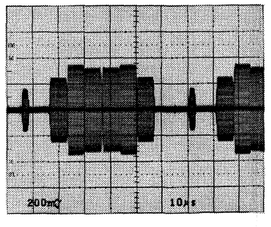

Measurement Condition

S-VIDEO IN : 75 % COLOR BARS
STOP (E-E) mode
②, ⑥ VIDEO IN SELECT : BLACK

VA-148 (4/5) ; VIDEO PROCESS & OUTPUT AMP

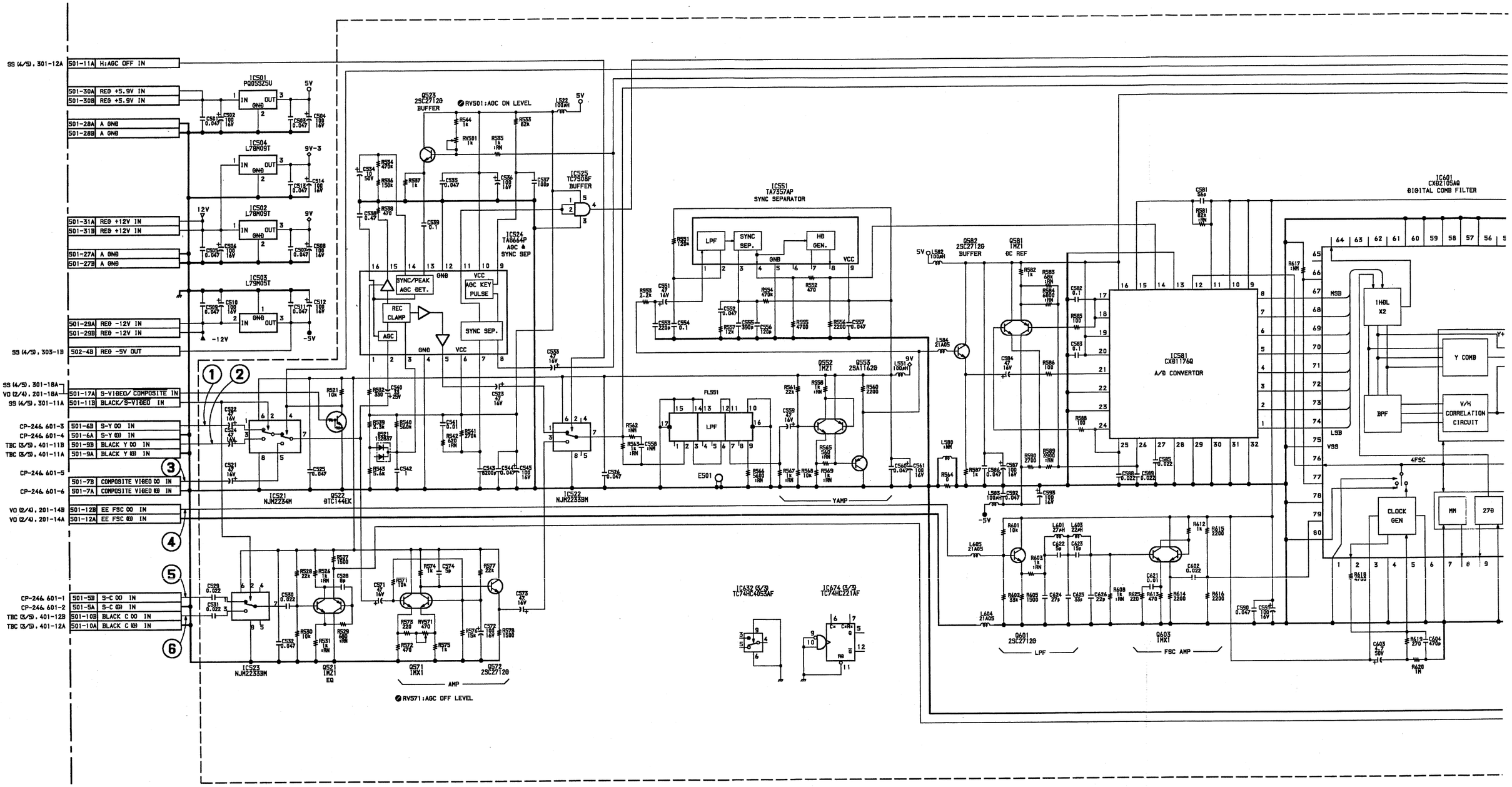

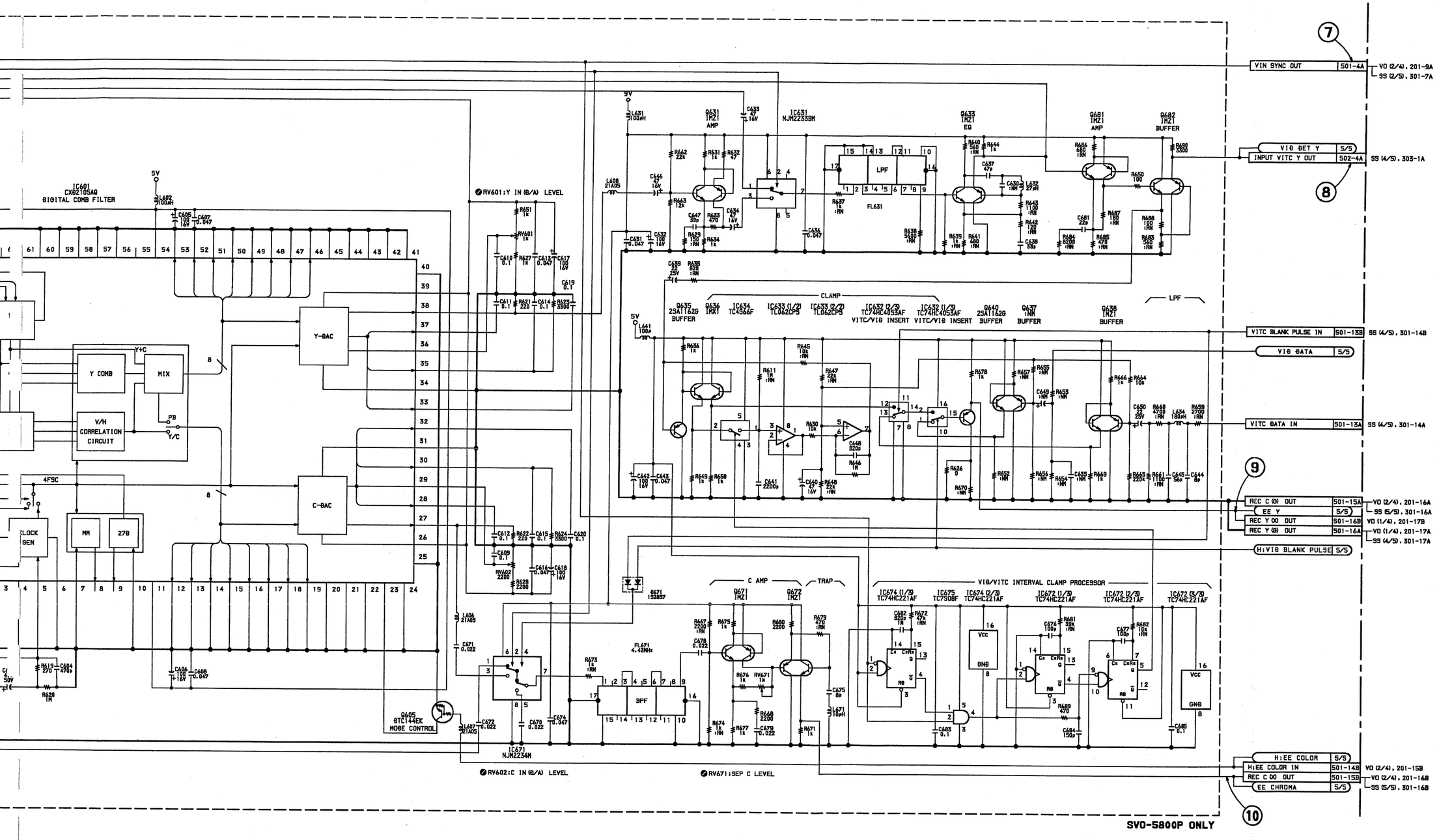

VD (2/4), 201-9A
SS (2/5), 301-7A
SS (4/5), 303-1A
SS (4/5), 301-14B
SS (4/5), 301-14A
VD (2/4), 201-16A
SS (5/5), 301-16A
VD (1/4), 201-17B
VD (1/4), 201-17A
SS (4/5), 301-17A
VD (2/4), 201-15B
VD (2/4), 201-16B
SS (5/5), 301-16B

VA-148 (4/5)

1-653-692-11 (1)
SVO-5800P

<PAL>

① CN501-19B pin PB mode

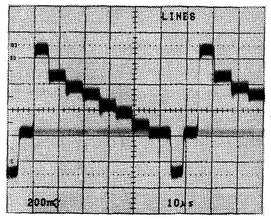

② CN501-20B pin PB mode

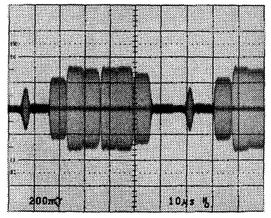

③ CN502-1B pin STOP (E-E) mode

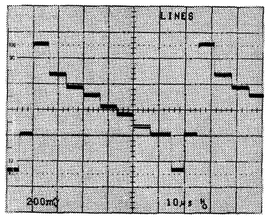

CN502-1B pin PB mode

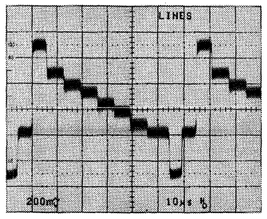

④ CN501-23B pin STOP (E-E) mode

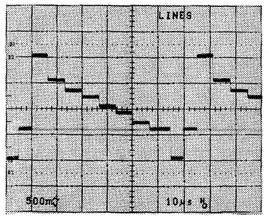

CN501-23B pin PB mode

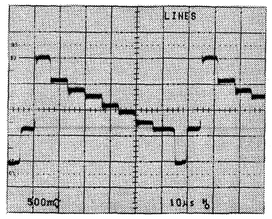

⑤ CN501-26B pin STOP (E-E) mode

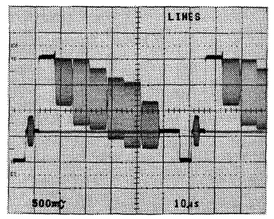

CN501-26B pin PB mode

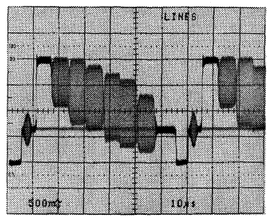

⑥ CN502-3B pin STOP (E-E) mode

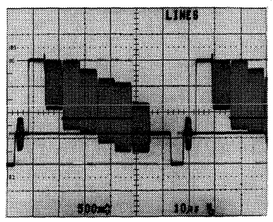

CN502-3B pin PB mode

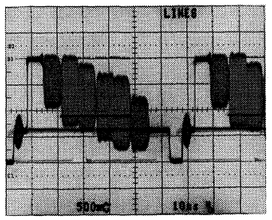

⑦ CN501-22B pin STOP (E-E) mode

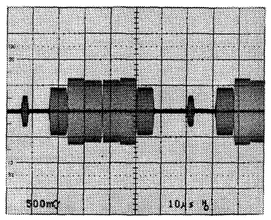

CN501-22B pin PB mode

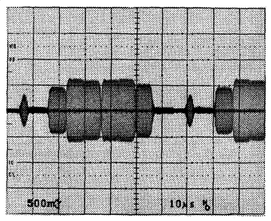

⑧ CN502-2B pin STOP (E-E) mode

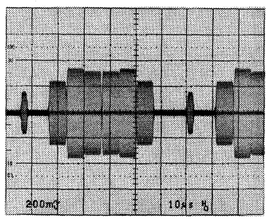

CN502-2B pin PB mode

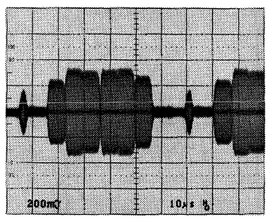

Measurement Condition

S-VIDEO IN : 75 % COLOR BARS
STOP (E-E) mode
PB (S-VHS) mode : KRV-45HPS

VA-148 (5/5) ; VIDEO PROCESS & OUTPUT AMP

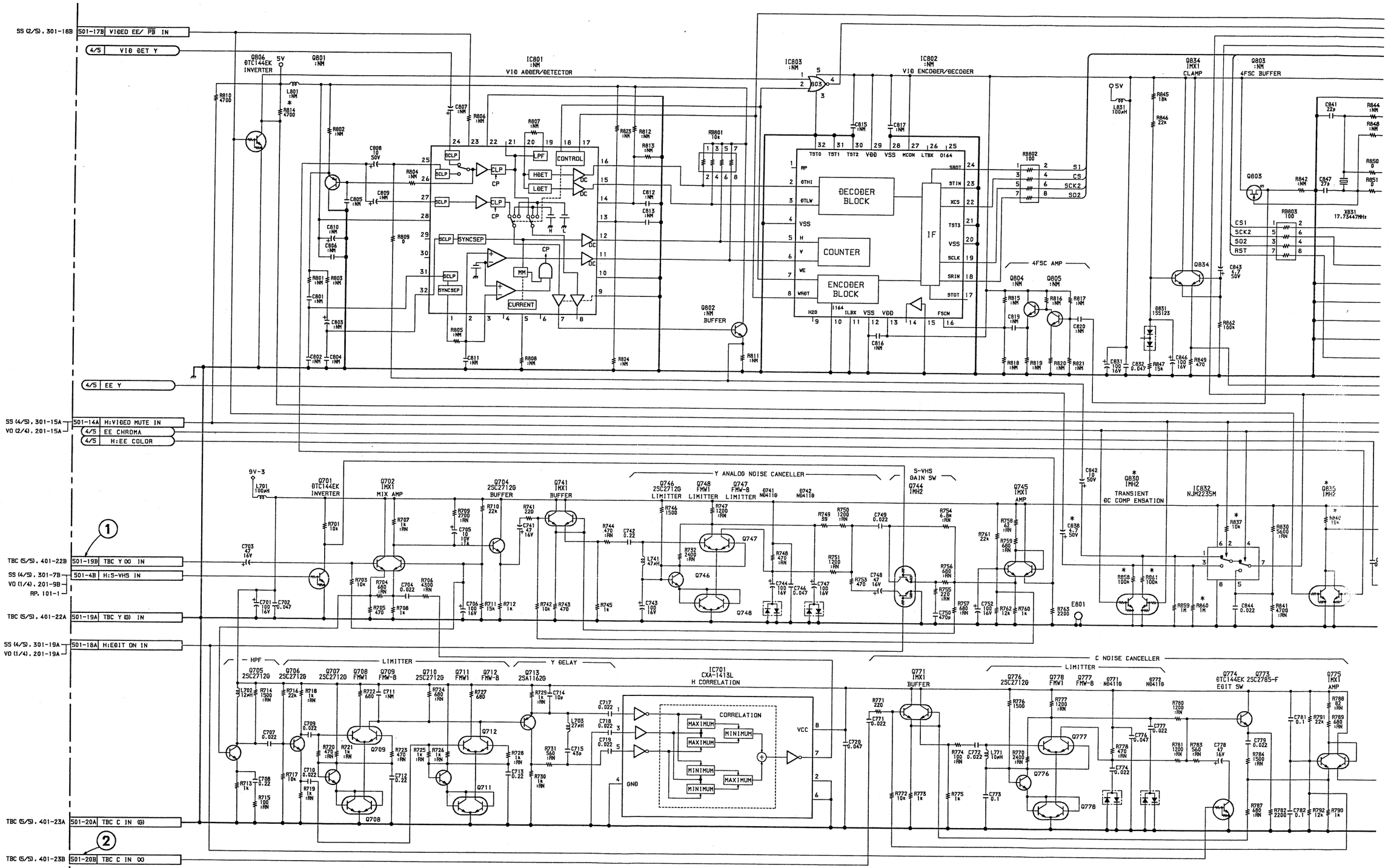

14-35 (P) 14-35 (P)

A B C D E F G H

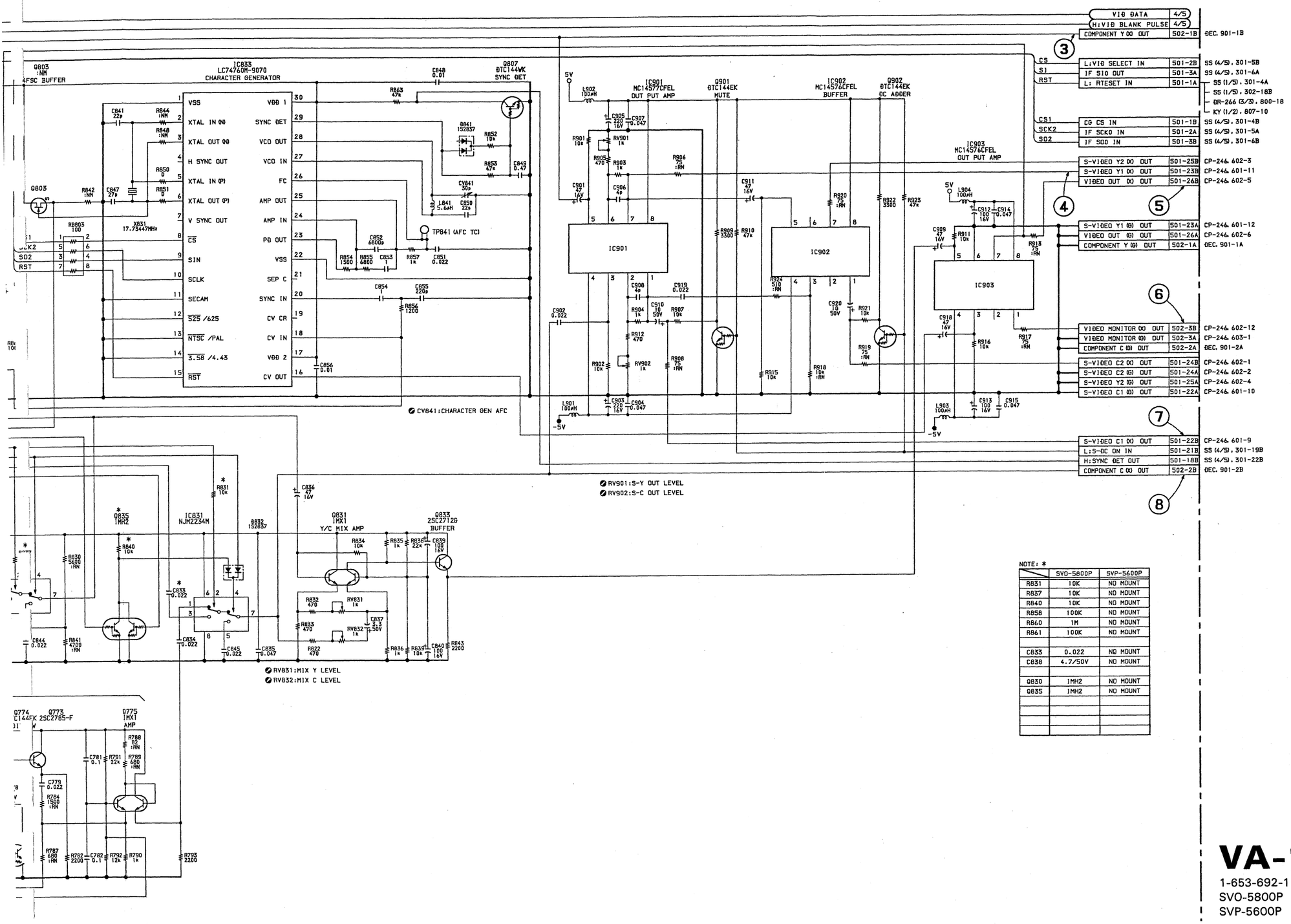

NOTE: *

	SVO-5800P	SVP-5600P
R831	10K	NO MOUNT
R837	10K	NO MOUNT
R840	10K	NO MOUNT
R858	100K	NO MOUNT
R860	1M	NO MOUNT
R861	100K	NO MOUNT
C833	0.022	NO MOUNT
C838	4.7/50V	NO MOUNT
Q830	1MH2	NO MOUNT
Q835	1MH2	NO MOUNT

VA-148 (5/5)

1-653-692-11 (1)
SVO-5800P
SVP-5600P

SS-58 ; SYSTEM & SERVO CONTROL/TIMECODE GENERATOR & READER

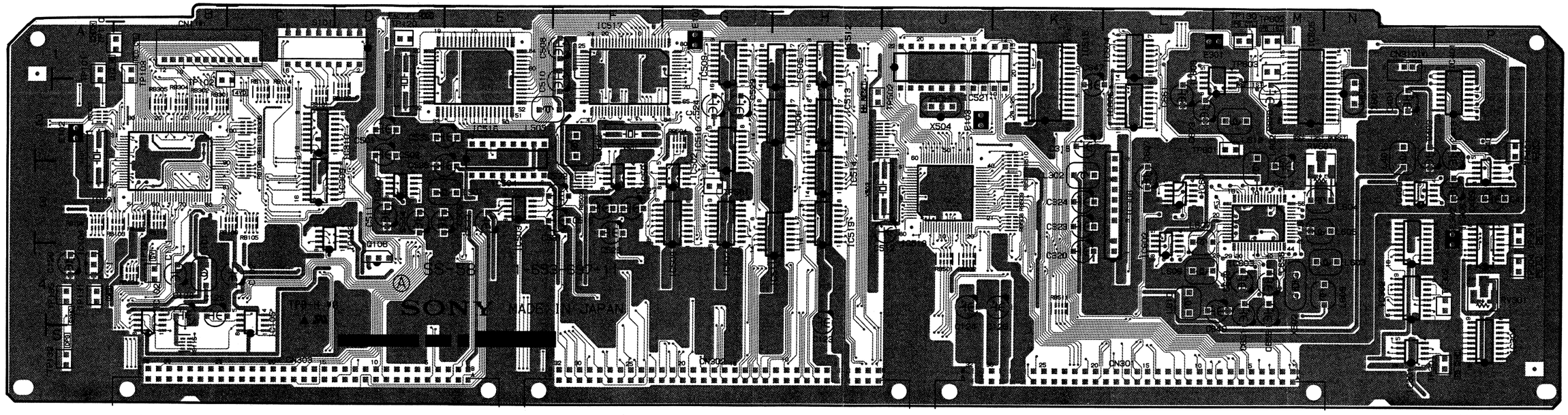

SS-58 — A SIDE —
1-653-697-11 (1)
SVO-5800/5800P
SVP-5600/5600P

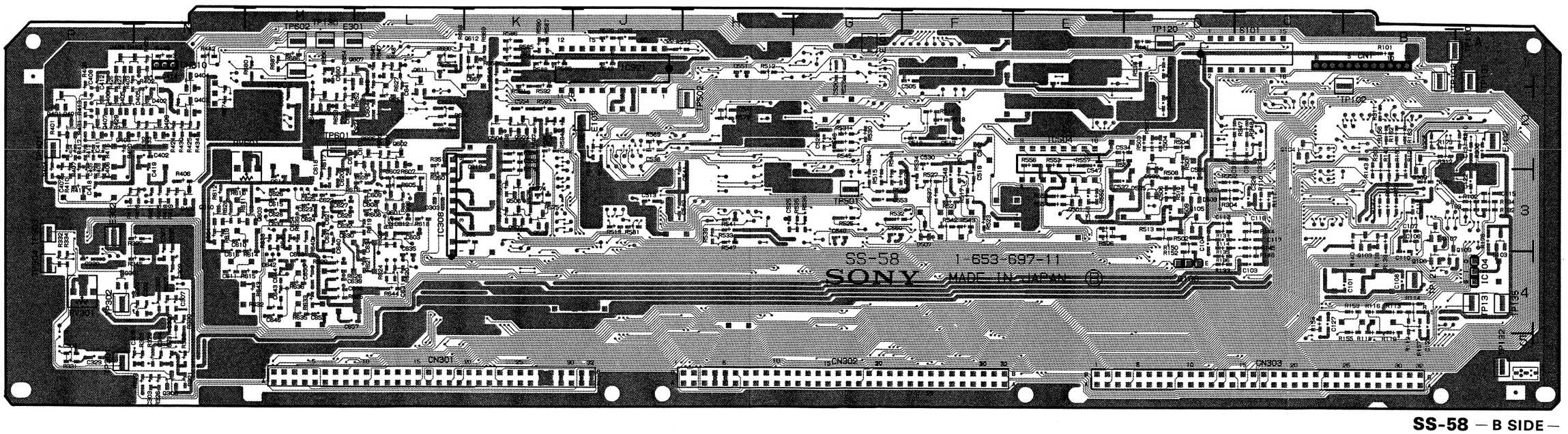

SS-58 — B SIDE —
1-653-697-11 (1)
SVO-5800/5800P
SVP-5600/5600P

SS-58
◎CN-1
CN3(
CN3(
CN3(
CN31
D103
D301
D303
D401
D402
○D403
○D404
○D405
D502
D503
D505
○D507
E101
E102
E103
E301
E302
IC10
IC1(
IC1
IC1
IC3
IC3
IC3
IC3
IC4
IC4
IC4
IC5
IC5
IC5
IC5
IC5
IC50
IC507
IC508
IC509
IC510
IC511
IC512
IC513
IC514
○IC515
IC516
IC517
IC519
IC520
IC521
IC601
IC602
IC603
IC604
IC605
IC606
IC608

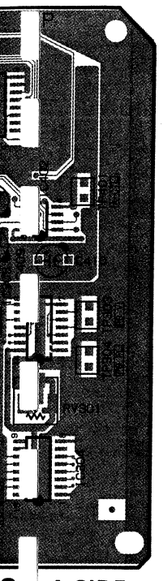

8 — A SIDE —
697-11 (1)
OC 5800P
OC 5600P

SS-58 (1-653-697-11)

◎CN-1	B-1	Q103	B-3 ＊	S101	C-1
CN301	L-5	Q104	C-2 ＊		
CN302	G-5	Q105	D-3 ＊	TP101	A-1
CN303	C-5	Q106	D-4	TP102	B-1
CN310	N-1	Q107	B-3 ＊	○TP103	B-1
		Q108	B-4 ＊	TP110	B-1
D103	A-3 ＊	Q109	B-4 ＊	◎TP120	D-1
D301	P-4 ＊	Q306	N-5 ＊	◎TP121	B-4
D303	L-3 ＊	Q309	B-2 ＊	TP130	M-1
D401	P-2 ＊	Q401	P-2 ＊	TP131	A-4
D402	N-2 ＊	Q402	N-3 ＊	TP132	A-5
○D403	P-1 ＊	○Q403	N-2 ＊	TP135	A-4
○D404	P-1 ＊	○Q404	N-1 ＊	TP301	P-5
○D405	P-2 ＊	○Q405	P-2 ＊	TP302	P-4
D502	D-2 ＊	○Q406	P-2 ＊	TP303	P-3
D503	D-3 ＊	○Q407	P-2 ＊	TP304 P	P-4
D505	D-3 ＊	○Q408	P-2 ＊	TP401	P-2
○D507	F-3 ＊	○Q409	N-2 ＊	TP501	G-3
		Q501 N	E-3 ＊	TP502	H-2
E101	G-1	Q503	K-2 ＊	TP601P	M-2
E102	A-2	Q504	K-2 ＊	◎TP602	M-1
E103	J-2	Q505	K-3 ＊	◎TP603	M-1
E301	M-1	Q506	K-3 ＊		
E302	P-3	Q507	K-3 ＊	X101	A-2
		Q601 P	L-3 ＊	X501	F-2
IC102	B-5	Q602 P	L-2 ＊	X502	D-2
IC103	D-4	Q603 P	M-3 ＊	X503	J-3
IC104	A-4	Q605 P	L-2 ＊	X504	J-2
IC105	C-5	Q607 P	L-1 ＊	X601 P	N-2
IC301	N-5	Q608 P	M-2 ＊	X602 P	M-4
IC302	N-4	Q610 P	N-3 ＊		
IC303	N-4	Q611 P	L-2 ＊		
IC304	P-5	Q612 P	K-1 ＊		
IC305	P-4				
IC308	L-4	RB101	C-2		
IC309	D-3	RB102	B-3		
IC310	D-2	RB103	B-3		
IC401	P-2	RB104	B-4		
IC402	P-3	RB105	C-3		
IC403	P-3	○RB106	C-3		
IC501	F-3	RB107	D-2		
IC502	G-3	RB108	A-3		
IC503	E-3	RB109	C-3		
IC504	E-3	RB110	C-2		
IC505	H-1	RB112	B-3		
IC506	H-2	RB113	C-2		
IC507	G-3	RB114	C-2		
IC508	G-3	RB115	B-5		
IC509	G-1	○RB301	B-2		
IC510	G-3	RB302	B-2		
IC511	H-4	○RB303	A-2		
IC512	H-1	○RB304	B-2		
IC513	H-2	RB305	B-2		
IC514	H-3	RB306	C-2		
○IC515	K-2	RB501	J-4		
IC516	E-1	RB502	J-4		
IC517	F-1	RB503	F-3		
IC519	H-3	RB504	G-2		
IC520	D-3	RB505	J-2		
IC521	J-2	RB506	J-2		
IC601 P	L-3	RB507	K-3		
IC602 P	L-4	RB508	K-3		
IC603 P	M-3	○RB509	K-3		
IC604 P	L-1	RB510	K-2		
IC605 P	N-2	RB511	K-4		
IC606 P	L-2				
IC608 P	M-2	RV301	P-4		
		RV601 P	M-3		

＊ mark ; B SIDE mount
○ mark ; SVO-5800/5800P only
◎ mark ; SVO-5800P only
N mark ; SVO-5800/SVP-5600 only
P mark ; SVO-5800P/SVP-5600P only

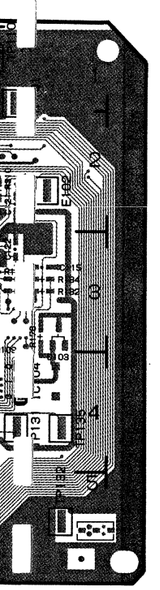

8 — B SIDE —
9 11 (1)
0(5800P
00/5600P

SS-58 (1/5)

SS-58 (1/5) ; SYSTEM & SERVO CONTROL

〈NTSC〉

① TP130 (M-1) PB mode

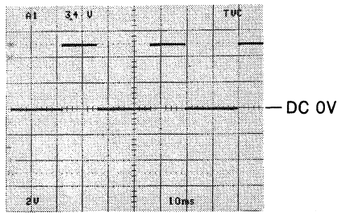

② TP103 (B-1) REC mode

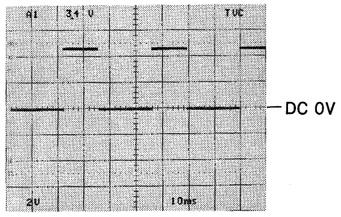

③ TP132 (A-5) PB mode

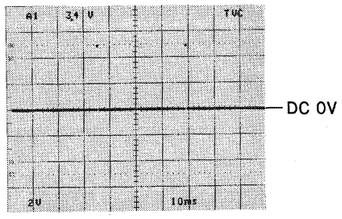

④ TP131 (A-4) PB mode

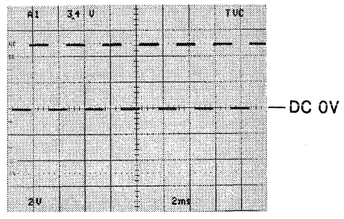

〈PAL〉

① TP130 (M-1) PB mode

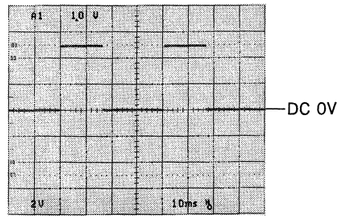

② TP103 (B-1) REC mode

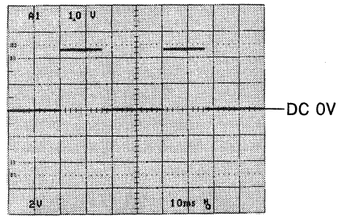

③ TP132 (A-5) PB mode

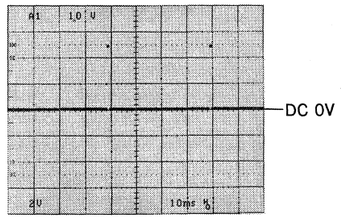

④ TP131 (A-4) PB mode

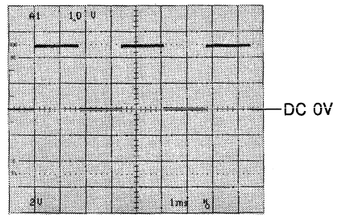

Measurement Condition
PB (S-VHS) mode : KRV-51HN

Measurement Condition
PB (S-VHS) mode : KRV-45HPS

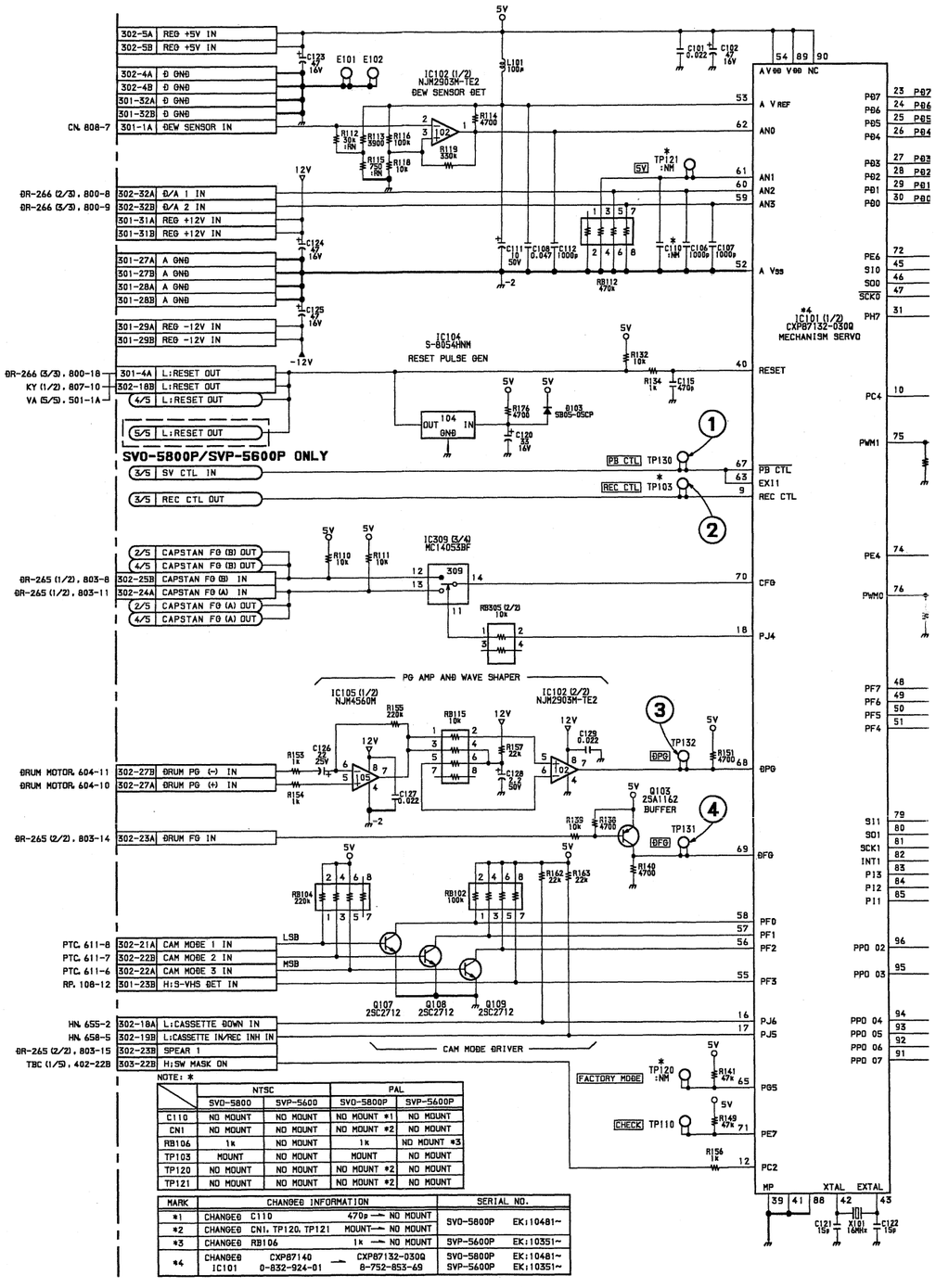

NOTE: *

	NTSC		PAL	
	SVD-5800	SVP-5600	SVD-5800P	SVP-5600P
C110	NO MOUNT	NO MOUNT	NO MOUNT *1	NO MOUNT
CN1	NO MOUNT	NO MOUNT	NO MOUNT *2	NO MOUNT
RB106	1k	NO MOUNT	1k	NO MOUNT *3
TP103	MOUNT	NO MOUNT	MOUNT	NO MOUNT
TP120	NO MOUNT	NO MOUNT	NO MOUNT *2	NO MOUNT
TP121	NO MOUNT	NO MOUNT	NO MOUNT *2	NO MOUNT

MARK	CHANGED INFORMATION		SERIAL NO.	
*1	CHANGED C110	470p → NO MOUNT	SVD-5800P	EK:10481~
*2	CHANGED CN1, TP120, TP121	MOUNT → NO MOUNT	SVP-5600P	EK:10351~
*3	CHANGED RB106	1k → NO MOUNT	SVP-5600P	EK:10351~
*4	CHANGED IC101 CXP87140 0-832-924-01	→ CXP87132-030Q 8-752-853-69	SVD-5800P SVP-5600P	EK:10481~ EK:10351~

14-37

A | B | C | D | E | F | G | H

SS-58 (1/5)

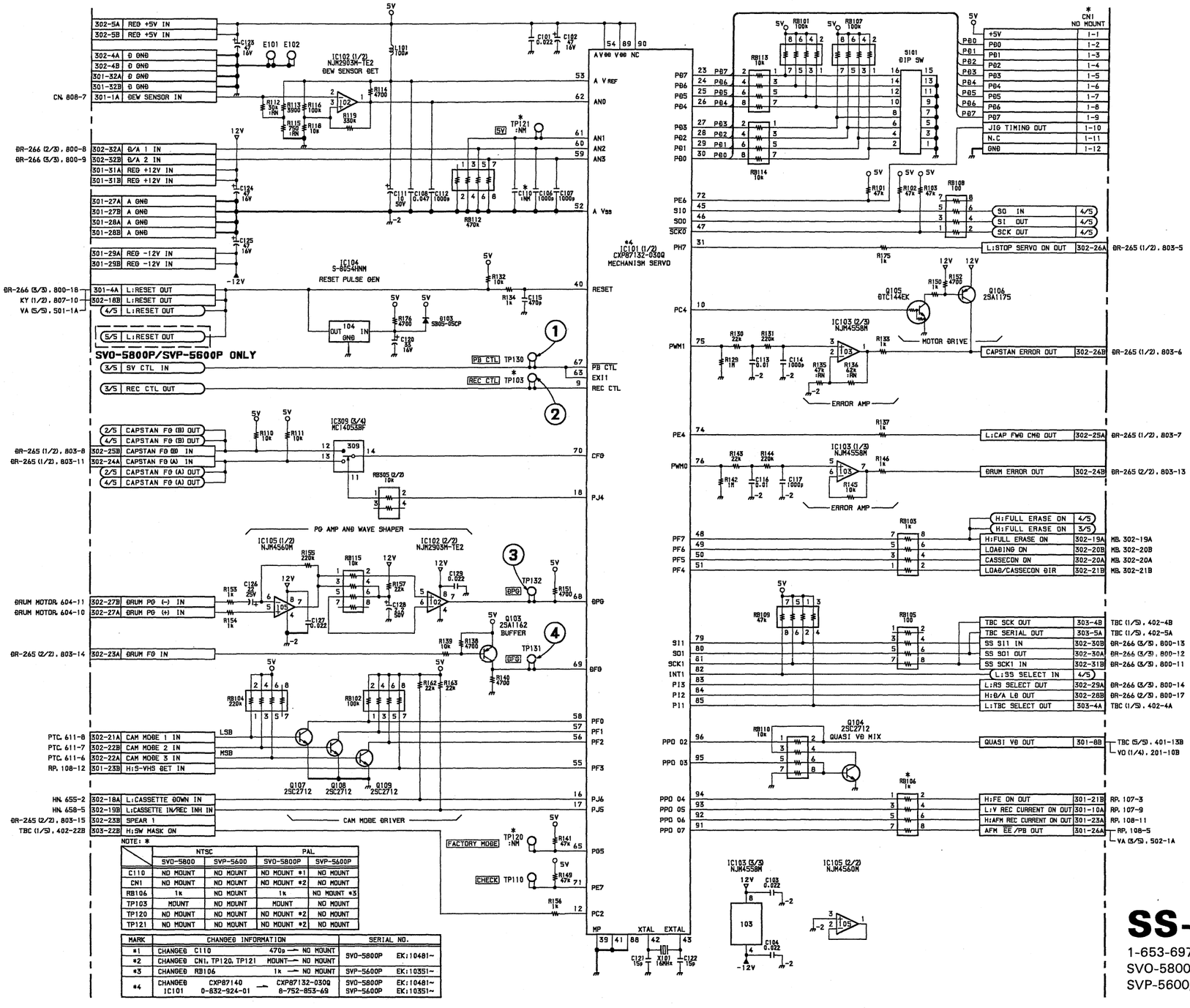

NOTE: *

	NTSC		PAL	
	SVØ-5800	SVP-5600	SVØ-5800P	SVP-5600P
C110	NØ MØUNT	NØ MØUNT	NØ MØUNT *1	NØ MØUNT
CN1	NØ MØUNT	NØ MØUNT	NØ MØUNT *2	NØ MØUNT
RB106	1k	NØ MØUNT	1k	NØ MØUNT *3
TP103	MØUNT	NØ MØUNT	MØUNT	NØ MØUNT
TP120	NØ MØUNT	NØ MØUNT	NØ MØUNT *2	NØ MØUNT
TP121	NØ MØUNT	NØ MØUNT	NØ MØUNT *2	NØ MØUNT

MARK	CHANGEØ INFØRMATIØN		SERIAL NØ.	
*1	CHANGEØ C110	470p → NØ MØUNT	SVØ-5800P	EK:10481~
*2	CHANGEØ CN1, TP120, TP121	MØUNT → NØ MØUNT		
*3	CHANGEØ RB106	1k → NØ MØUNT	SVP-5600P	EK:10351~
*4	CHANGEØ CXP87140 IC101 Ø-832-924-01	→ CXP87132-030Q 8-752-853-69	SVØ-5800P SVP-5600P	EK:10481~ EK:10351~

SS-58 (1/5)

1-653-697-11 (1)
SVØ-5800/5800P
SVP-5600/5600P

14-37

SS-58 (2/5); SYSTEM & SERVO CONTROL

<NTSC>
① TP303 (P-3) REC/PB mode

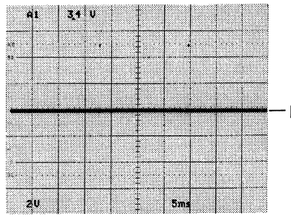

DC 0V

② TP135 (A-4) REC/PB mode

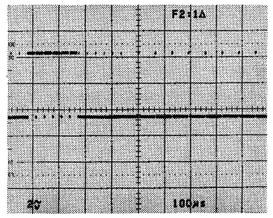

③ TP101 (A-1) PB mode

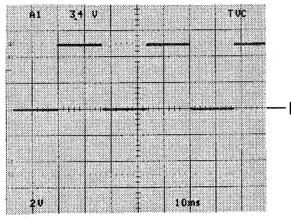

DC 0V

④ TP102 (B-1) PB mode

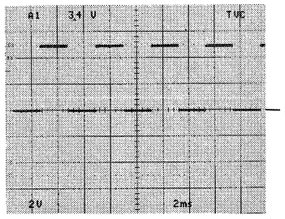

DC 0V

<PAL>
① TP303 (P-3) REC/PB mode

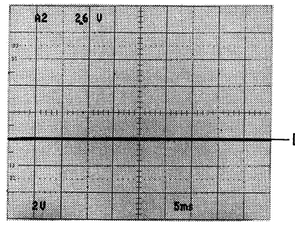

DC 0V

② TP135 (A-4) REC/PB mode

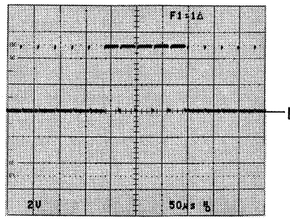

DC 0V

③ TP101 (A-1) PB mode

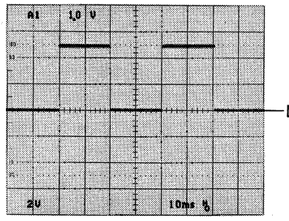

DC 0V

④ TP102 (B-1) PB mode

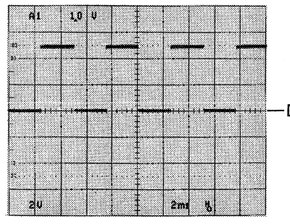

DC 0V

Measurement Condition
S-VIDEO IN: 75 % COLOR BARS
(SETUP 7.5%)
REC (S-VHS) mode
PB (S-VHS) mode: KRV-51HN

Measurement Condition
S-VIDEO IN: 75 % COLOR BARS
REC (S-VHS) mode
PB (S-VHS) mode: KRV-45HPS

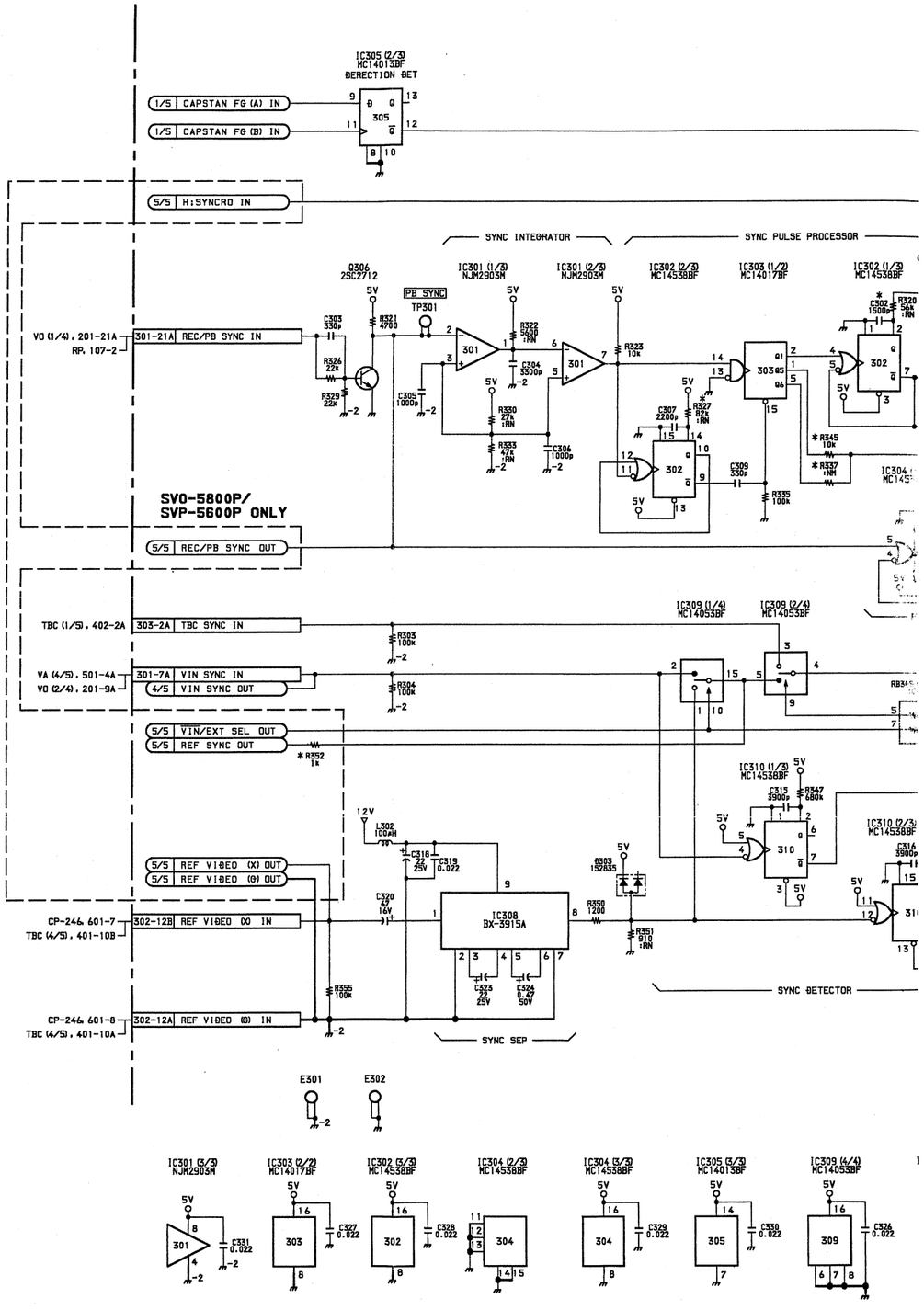

SS-58 (2/5)

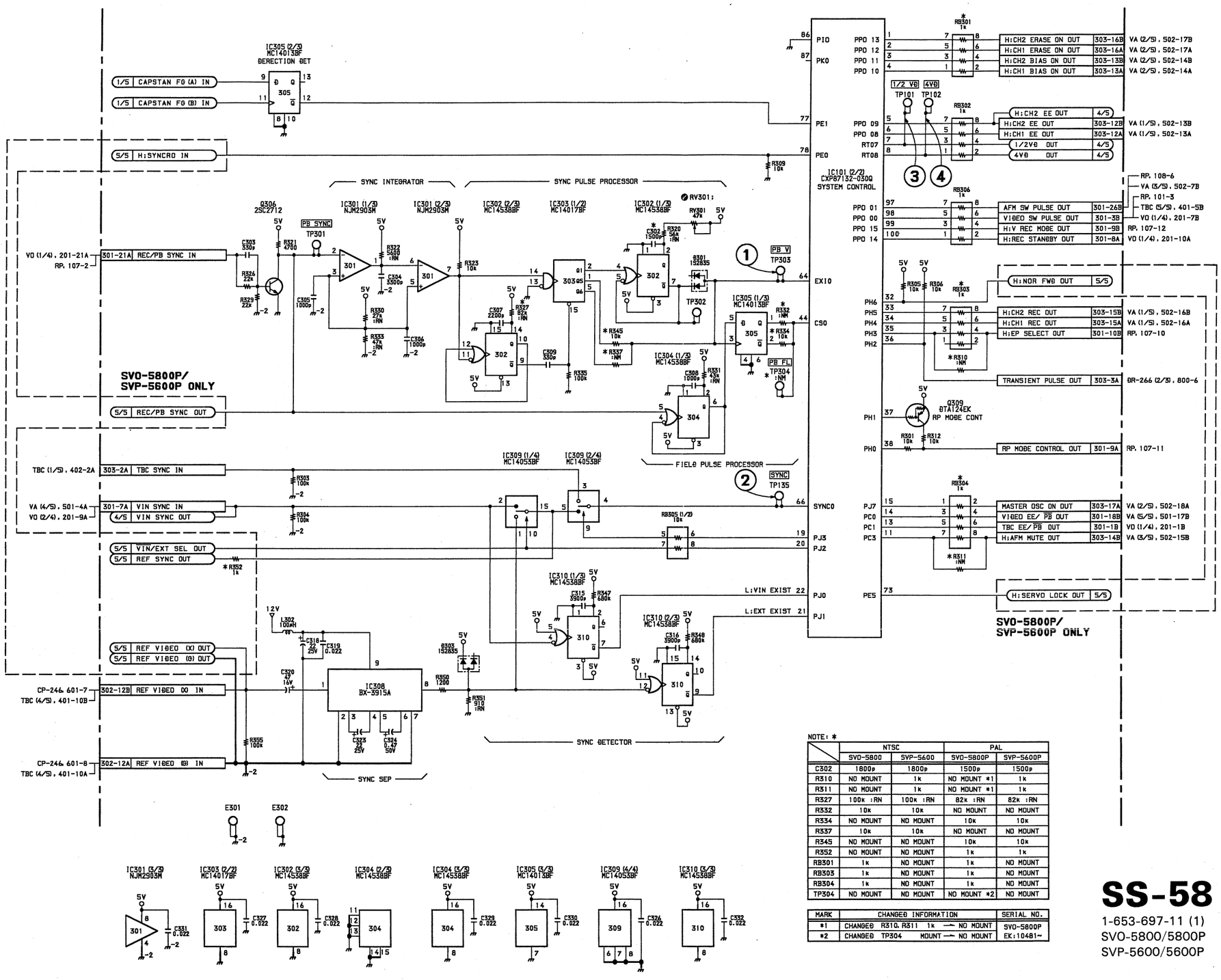

NOTE: *

	NTSC		PAL	
	SVO-5800	SVP-5600	SVO-5800P	SVP-5600P
C302	1800p	1800p	1500p	1500p
R310	NO MOUNT	1k	NO MOUNT *1	1k
R311	NO MOUNT	1k	NO MOUNT *1	1k
R327	100k :RN	100k :RN	82k :RN	82k :RN
R332	10k	10k	NO MOUNT	NO MOUNT
R334	NO MOUNT	NO MOUNT	10k	10k
R337	10k	10k	NO MOUNT	NO MOUNT
R345	NO MOUNT	NO MOUNT	10k	10k
R352	NO MOUNT	NO MOUNT	1k	1k
RB301	1k	NO MOUNT	1k	NO MOUNT
RB303	1k	NO MOUNT	1k	NO MOUNT
RB304	1k	NO MOUNT	1k	NO MOUNT
TP304	NO MOUNT	NO MOUNT	NO MOUNT *2	NO MOUNT

MARK	CHANGED INFORMATION	SERIAL NO.
*1	CHANGED R310, R311 1k → NO MOUNT	SVO-5800P
*2	CHANGED TP304 MOUNT → NO MOUNT	EK:10481~

SS-58 (2/5)

1-653-697-11 (1)
SVO-5800/5800P
SVP-5600/5600P

14-39

SS-58 (3/5) ; CTL REC & PB AMP
AH-40 ; CTL HEAD <SVO-5800/5800P>
AH-28 ; CTL HEAD <SVP-5600/5600P>

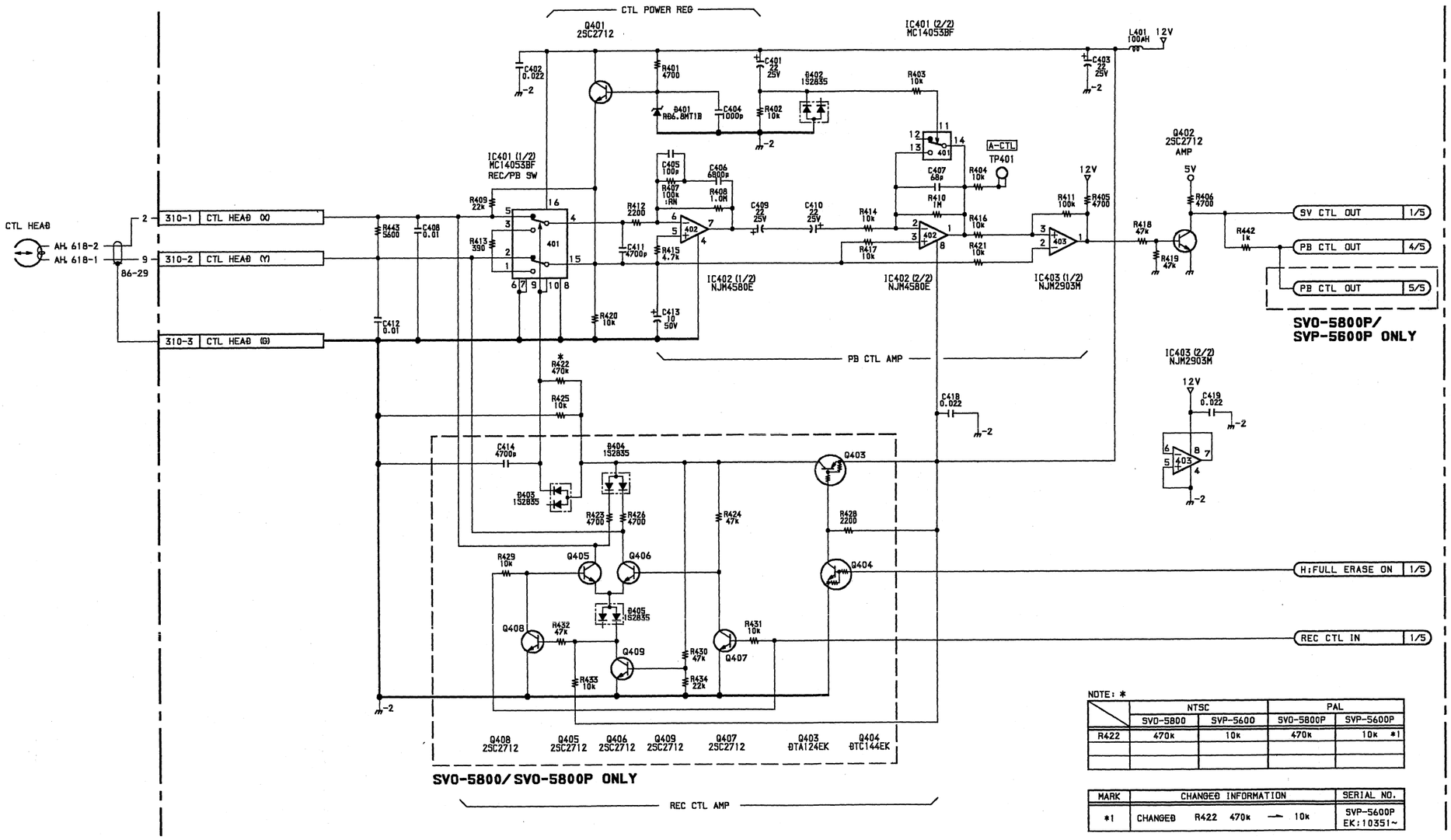

NOTE: *

	NTSC		PAL	
	SVO-5800	SVP-5600	SVO-5800P	SVP-5600P
R422	470k	10k	470k	10k *1

MARK	CHANGED INFORMATION	SERIAL NO.
*1	CHANGED R422 470k → 10k	SVP-5600P EK:10351~

SS-58 (3/5)

1-653-697-11 (1)
SVO-5800/5800P
SVP-5600/5600P

SS-58 (4/5) ; SYSTEM CONTROL/TIMECODE GENERATOR & READER

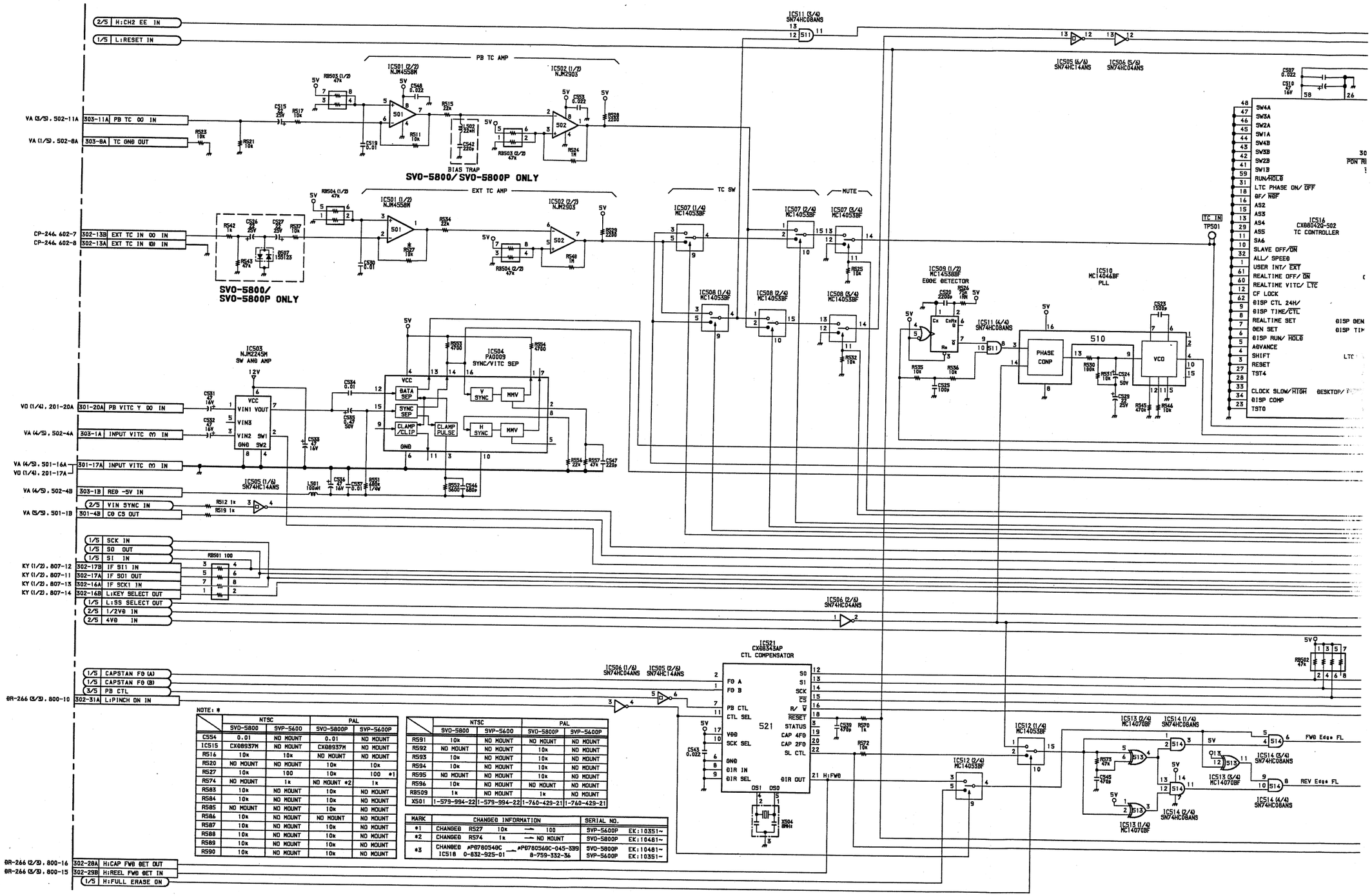

A B C D E F G H

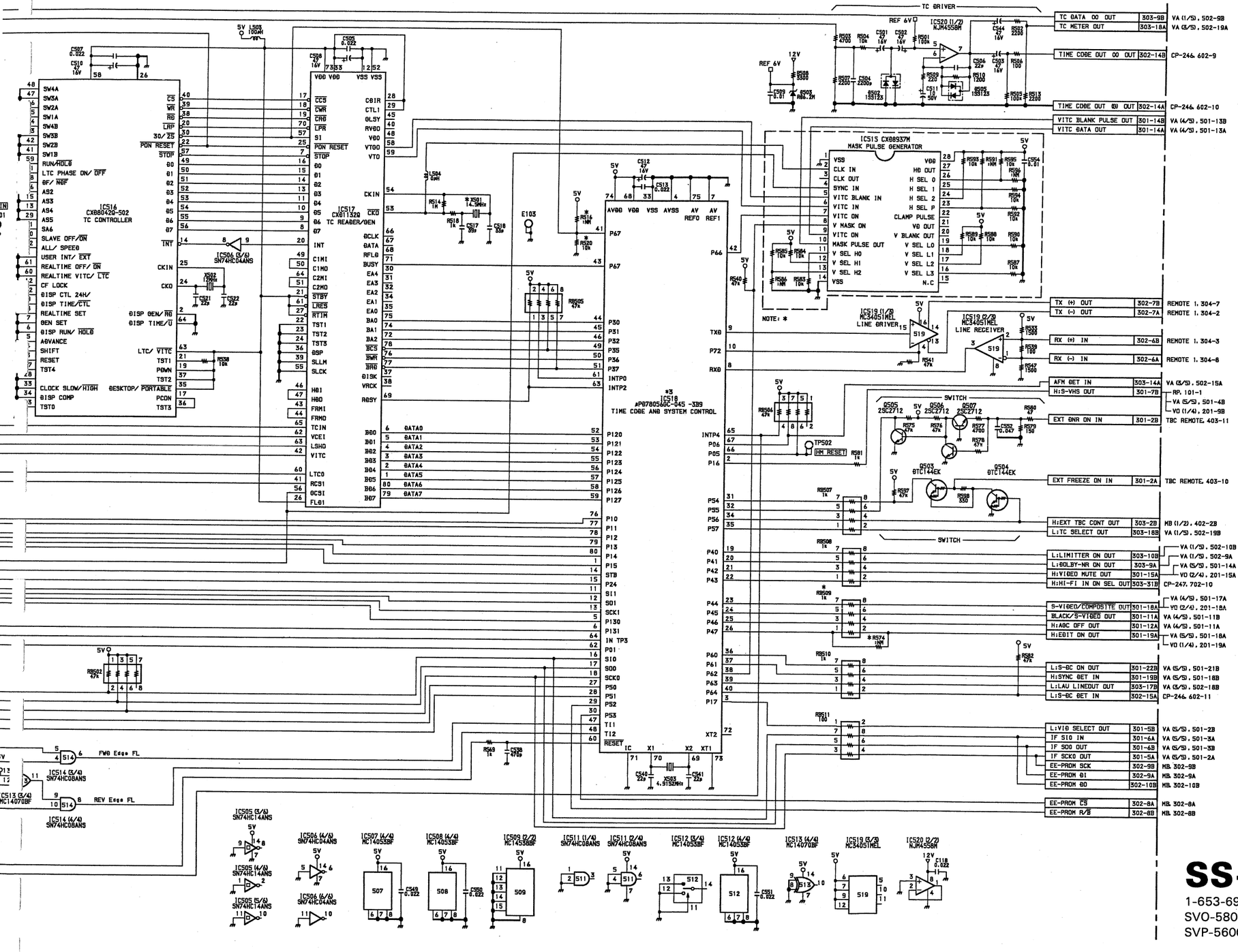

SS-58 (4/5)

1-653-697-11 (1)
SVO-5800/5800P
SVP-5600/5600P

SS-58 (5/5) ; COLOR FRAMING

〈PAL〉
① TP601 (M-2) PB mode

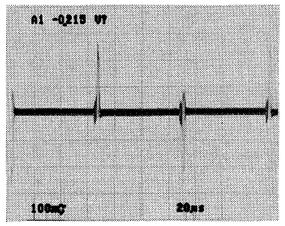

Measurement Condition
PB (S-VHS) mode : KRV-45HPS

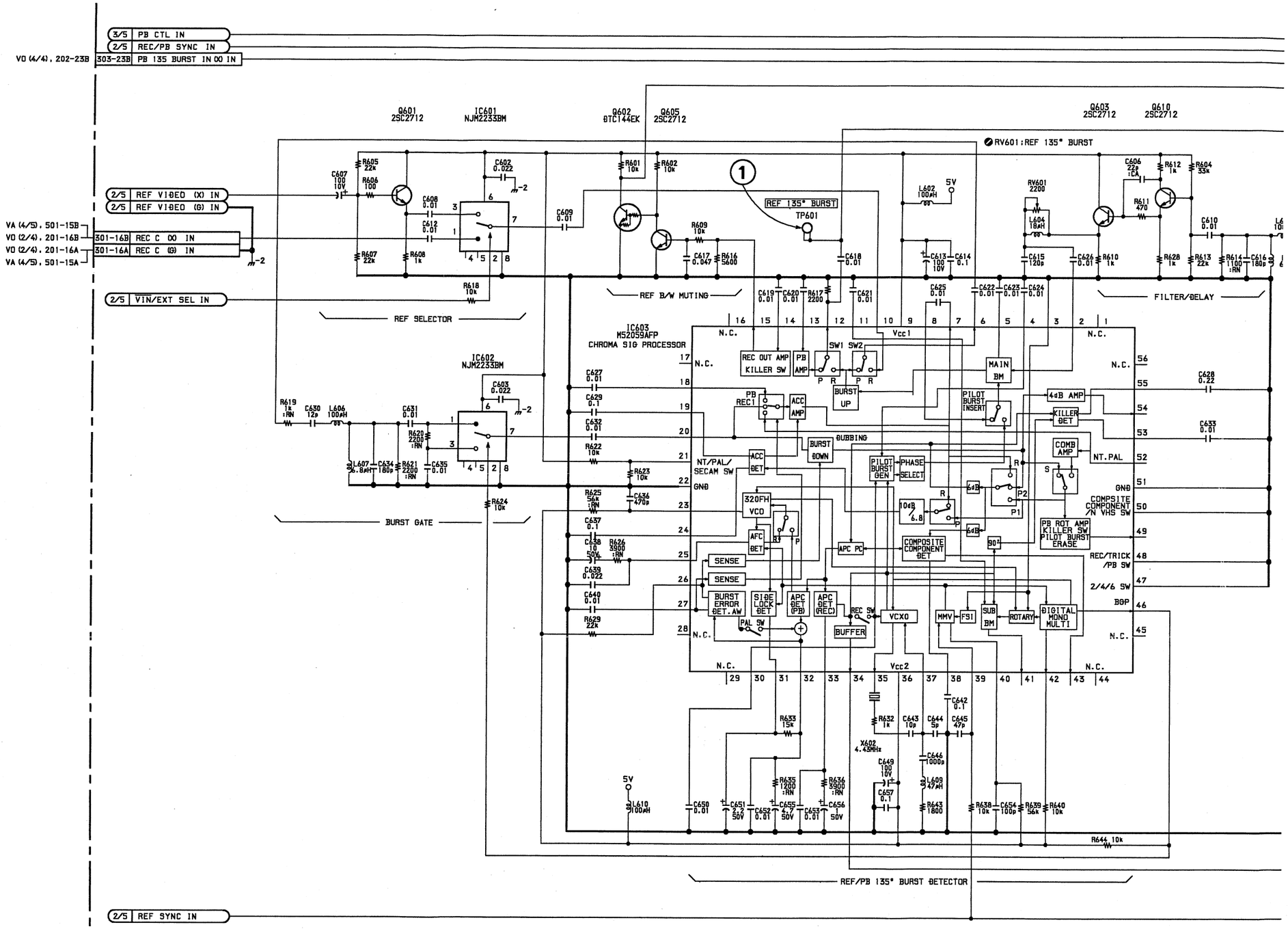

A | B | C | D | E | F | G | H

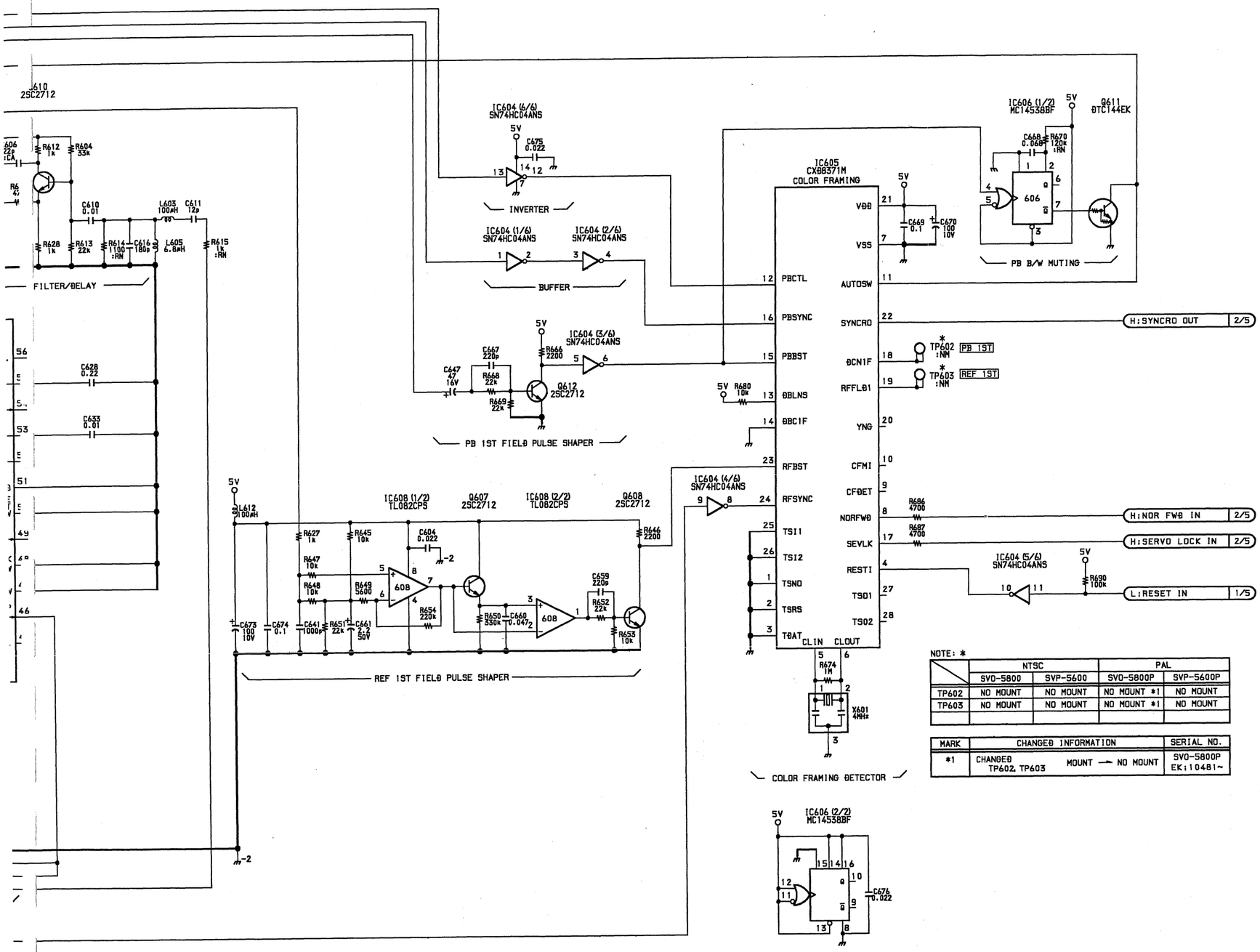

NOTE: *

	NTSC		PAL	
	SVO-5800	SVP-5600	SVO-5800P	SVP-5600P
TP602	NO MOUNT	NO MOUNT	NO MOUNT *1	NO MOUNT
TP603	NO MOUNT	NO MOUNT	NO MOUNT *1	NO MOUNT

MARK	CHANGED INFORMATION	SERIAL NO.
*1	CHANGED TP602, TP603 MOUNT → NO MOUNT	SVO-5800P EK:10481~

SS-58 (5/5)

1-653-697-11 (1)
SVO-5800P
SVP-5600P

DR-265 ; DRUM & CAPSTAN DRIVER & FG AMP, BRAKE SOLENOID DRIVER

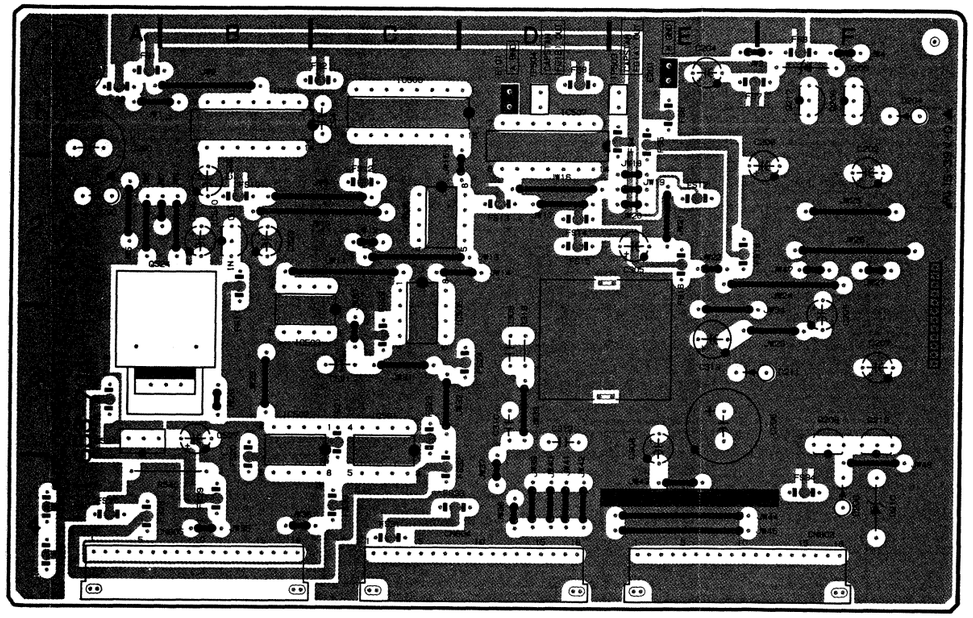

DR-265 — A SIDE —
1-653-704-11 (1)
SVO-5800/5800P
SVP-5600/5600P

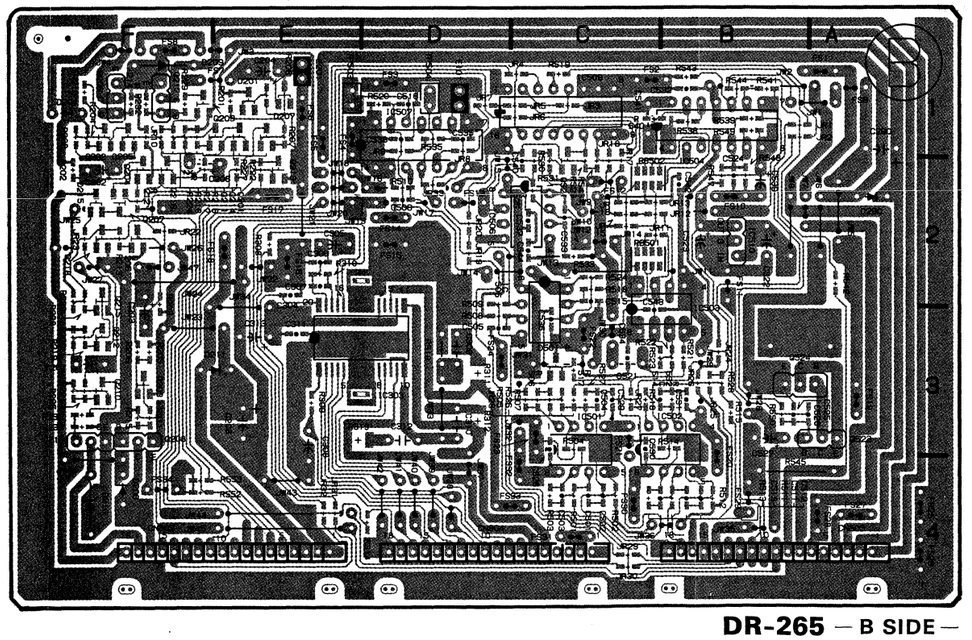

DR-265 — B SIDE —
1-653-704-11 (1)
SVO-5800/5800P
SVP-5600/5600P

DR-265 (1-653-704-11)

CN803	E-4
CN804	D-4
CN805	B-4
D201	E-1 *
D204	F-1
D205	F-1 *
D206	F-4
D207	E-1 *
D209	F-1
D210	F-4
D211	E-3
D215	F-2 *
D290	A-2
D501	C-3 *
E101	D-1
E201	E-1
IC303	E-3 *
IC501	C-3
IC502	C-3
IC503	C-2
IC504	B-1
IC505	C-2
IC506	C-2
IC507	D-1
IC509	D-1
IC510	B-2
Q201	E-1 *
Q202	F-1 *
Q203	F-3 *
Q204	F-2 *
Q205	F-2 *
Q206	F-1
Q207	F-2 *
Q208	F-3
Q209	F-1 *
Q210	F-3 *
Q211	E-1 *
Q212	F-3 *
Q213	E-2 *
Q214	E-1 *
Q215	F-2 *
Q216	F-2 *
Q217	F-1
Q218	F-2 *
Q219	F-3
Q521	C-2 *
Q523	A-3
Q524	B-3
RB501	C-2 *
RB502	C-2 *
TP503	E-1
TP504	D-1

* mark ; B SIDE mount

DR-265 (1-653-704-11)

CN803	E-4
CN804	D-4
CN805	B-4
D201	E-1 *
D204	F-1
D205	F-1 *
D206	F-4
D207	E-1 *
D209	F-1
D210	F-4
D211	E-3
D215	F-2 *
D290	A-2
D501	C-3 *
E101	D-1
E201	E-1
IC303	E-3 *
IC501	C-3
IC502	C-3
IC503	C-2
IC504	B-1
IC505	C-2
IC506	C-2
IC507	D-1
IC509	D-1
IC510	B-2
Q201	E-1 *
Q202	F-1 *
Q203	F-3 *
Q204	F-2 *
Q205	F-2 *
Q206	F-1
Q207	F-2 *
Q208	F-3
Q209	F-1 *
Q210	F-3 *
Q211	E-1 *
Q212	F-3 *
Q213	E-2 *
Q214	E-1 *
Q215	F-2 *
Q216	F-2 *
Q217	F-1
Q218	F-2 *
Q219	F-3
Q521	C-2 *
Q523	A-3
Q524	B-3
RB501	C-2 *
RB502	C-2 *
TP503	E-1
TP504	D-1

* mark ; B SIDE mount

DR-265 (1/2); CAPSTAN DRIVER & FG AMP

〈NTSC〉

① TP504 (D-1) PB mode

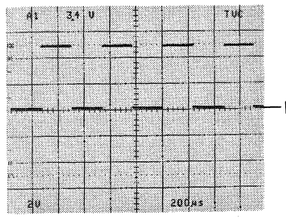

② TP503 (E-1) PB mode

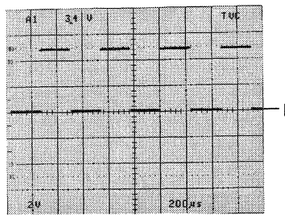

Measurement Condition

PB (S-VHS) mode: KRV-51HN

〈PAL〉

① TP504 (D-1) PB mode

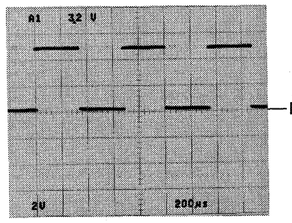

② TP503 (E-1) PB mode

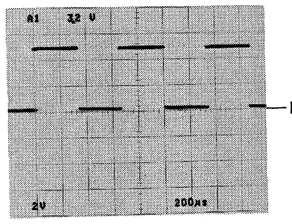

Measurement Condition

PB (S-VHS) mode: KRV-45HPS

注意1：⚠印のついた部品は安全性を維持するために重要な部品です。従って交換する時は必ず指定の部品を使って下さい。

NOTE:
The ⚠-marked components are critical to safety.
Replace only with same components as specified.

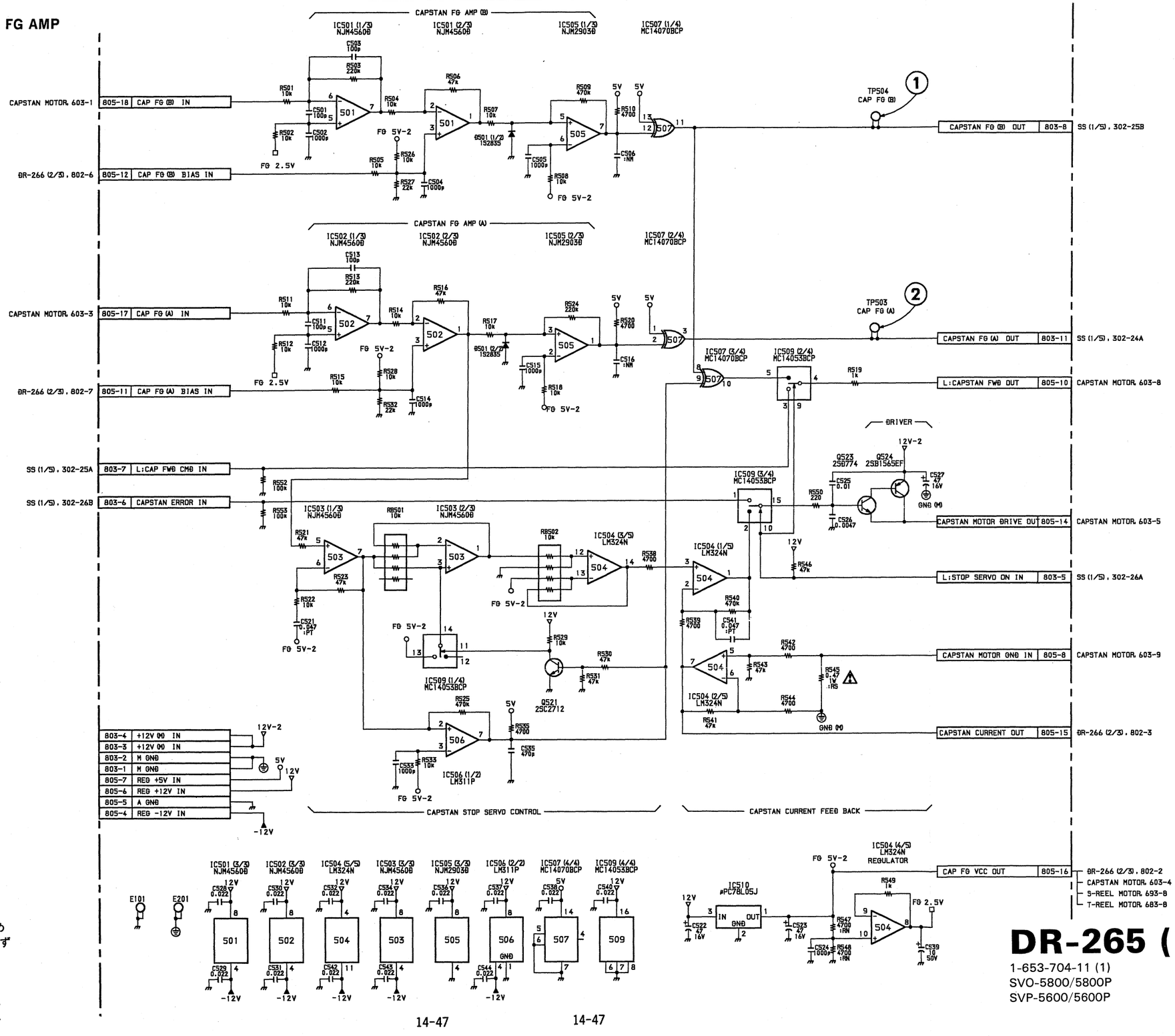

DR-265 (1/2)

1-653-704-11 (1)
SVO-5800/5800P
SVP-5600/5600P

DR-265 (2/2) ; DRUM & BRAKE SOLENOID DRIVER

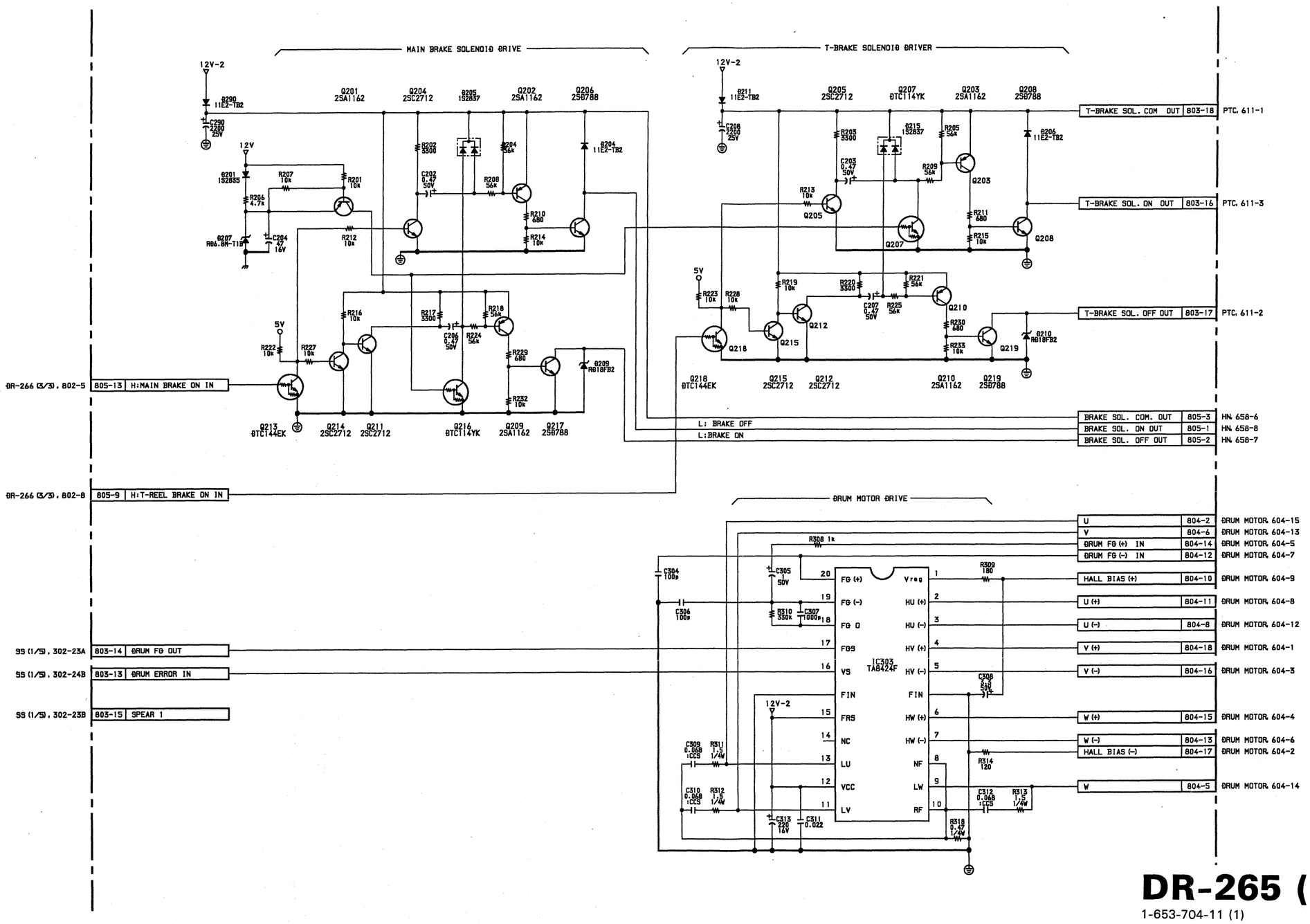

DR-265 (2/2)

1-653-704-11 (1)
SVO-5800/5800P
SVP-5600/5600P

DR-266 ; REEL DRIVER & SERVO CONTROL FG AMP, TENSION SENSOR AMP

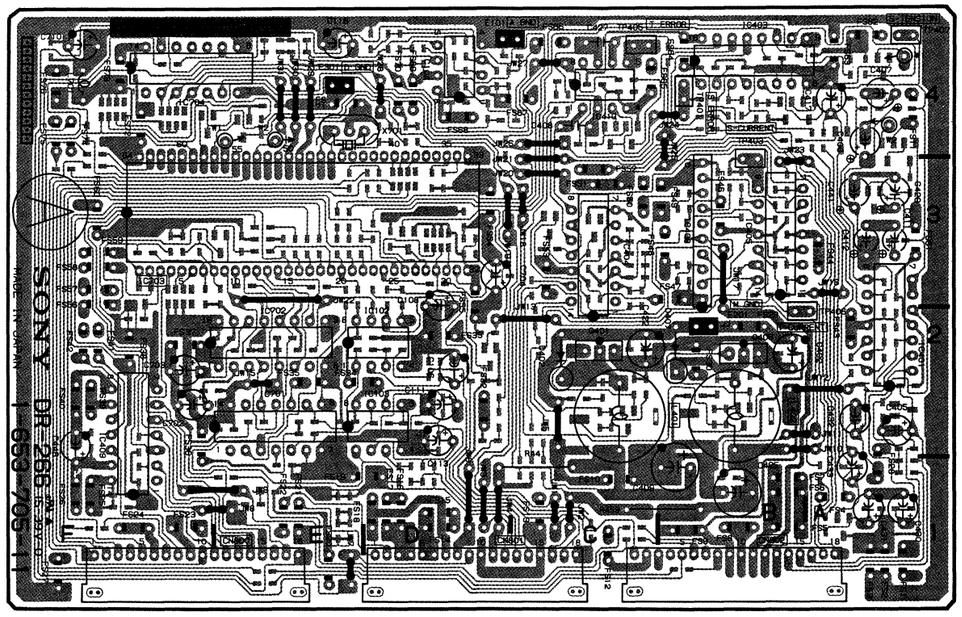

DR-266 — A SIDE —
1-653-705-11 (1)
SVO-5800/5800P
SVP-5600/5600P

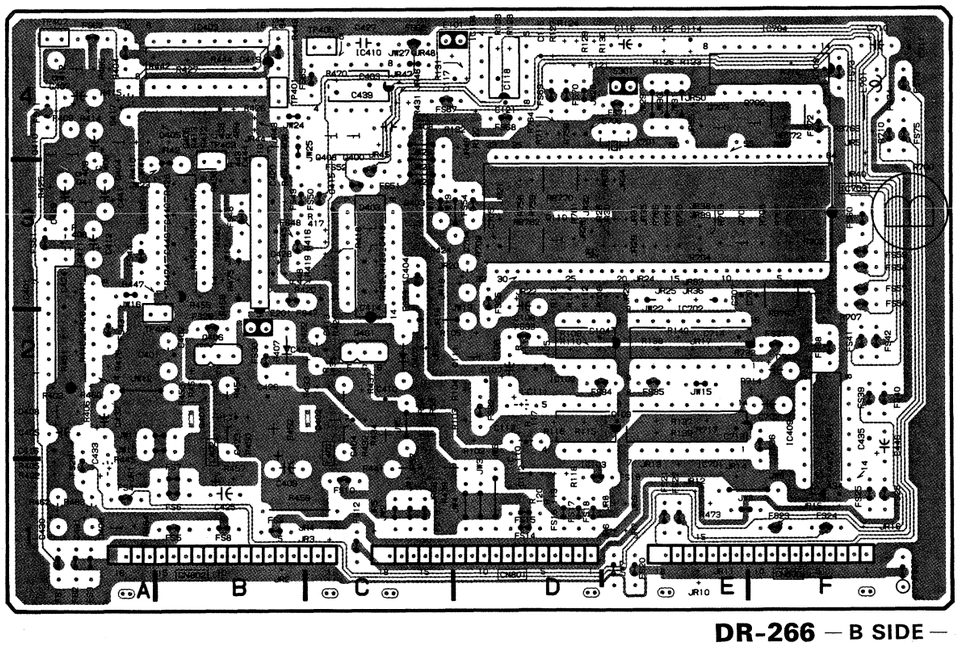

DR-266 — B SIDE —
1-653-705-11 (1)
SVO-5800/5800P
SVP-5600/5600P

DR-266 (1-653-705-11)

CN800	F-1
CN801	D-1
CN802	B-1
D402	C-2
D403	C-3 *
D405	A-4 *
D406	A-1 *
D407	B-2
D408	A-2 *
D701	F-3 *
E101	D-4
E201	B-2
E301	E-4
IC102	E-2
IC103	E-2
IC104	D-4
IC401	A-2
IC403	B-4
IC404	C-3
IC405	B-3
IC408	B-3
IC409	F-1
IC410	C-4
IC701	E-2
IC702	E-2
IC704	F-4
Q110	D-3 *
Q111	D-2 *
Q400	C-4 *
Q401	C-2
Q402	C-2 *
Q403	C-3 *
Q404	A-4 *
Q405	B-4 *
Q406	B-2
Q407	B-2 *
Q408	C-4 *
Q409	A-4 *
Q410	A-4 *
Q411	A-3 *
Q412	A-4 *
Q701	E-3 *
Q702	F-4 *
Q703	E-4 *
RB762	D-3 *
RB763	F-4 *
RB767	F-3 *
RB770	D-3 *
RB772	F-4 *
TP401	B-4
TP403	B-4
TP405	C-4
TP406	B-2
TP407	A-4
X701	E-4

* mark; B SIDE mount

DR-266 (1/3) ; FG AMP, REEL FG AMP

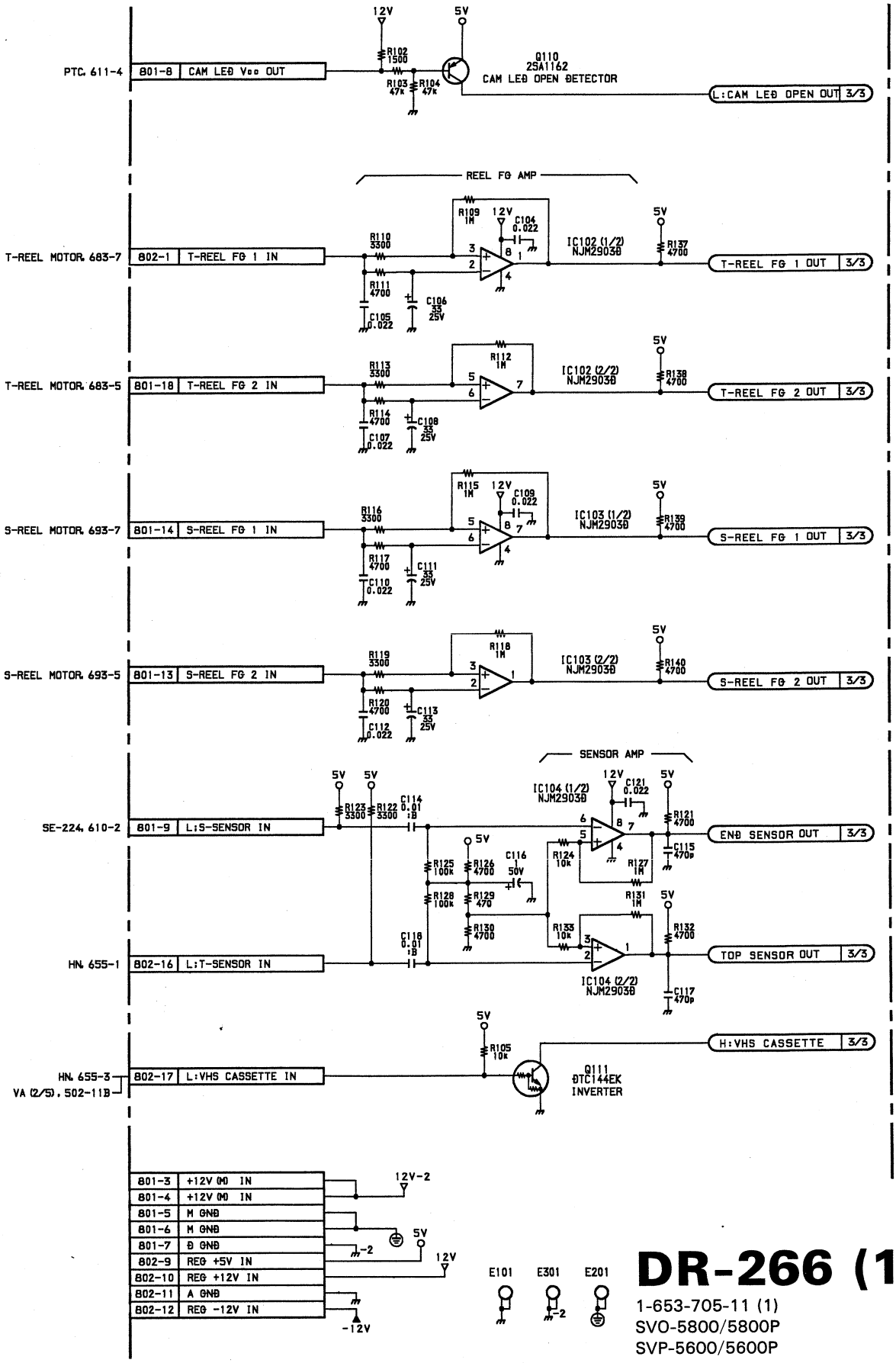

DR-266 (1/3)

1-653-705-11 (1)
SVO-5800/5800P
SVP-5600/5600P

DR-266 (2/3); REEL DRIVER/TENSION SENSOR AMP

<NTSC/PAL>

① TP401 (B-4) PB mode

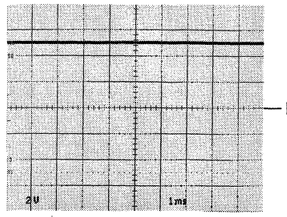

DC 0V

⑥ TP406 (B-2) PB mode

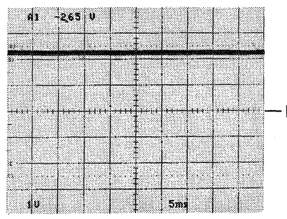

DC 0V

② CN801-11 pin PB mode

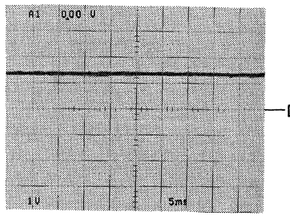

DC 0V

Measurement Condition

PB (S-VHS) mode: KRV-51HN <NTSC>

PB (S-VHS) mode: KRV-45HPS <PAL>

③ TP403 (B-4) PB mode

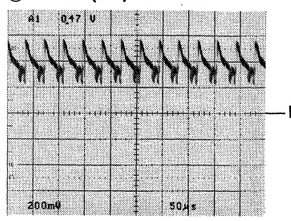

DC 0V

④ TP405 (C-4) PB mode

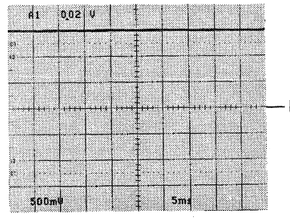

DC 0V

⑤ CN801-16 pin PB mode

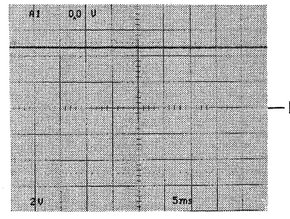

DC 0V

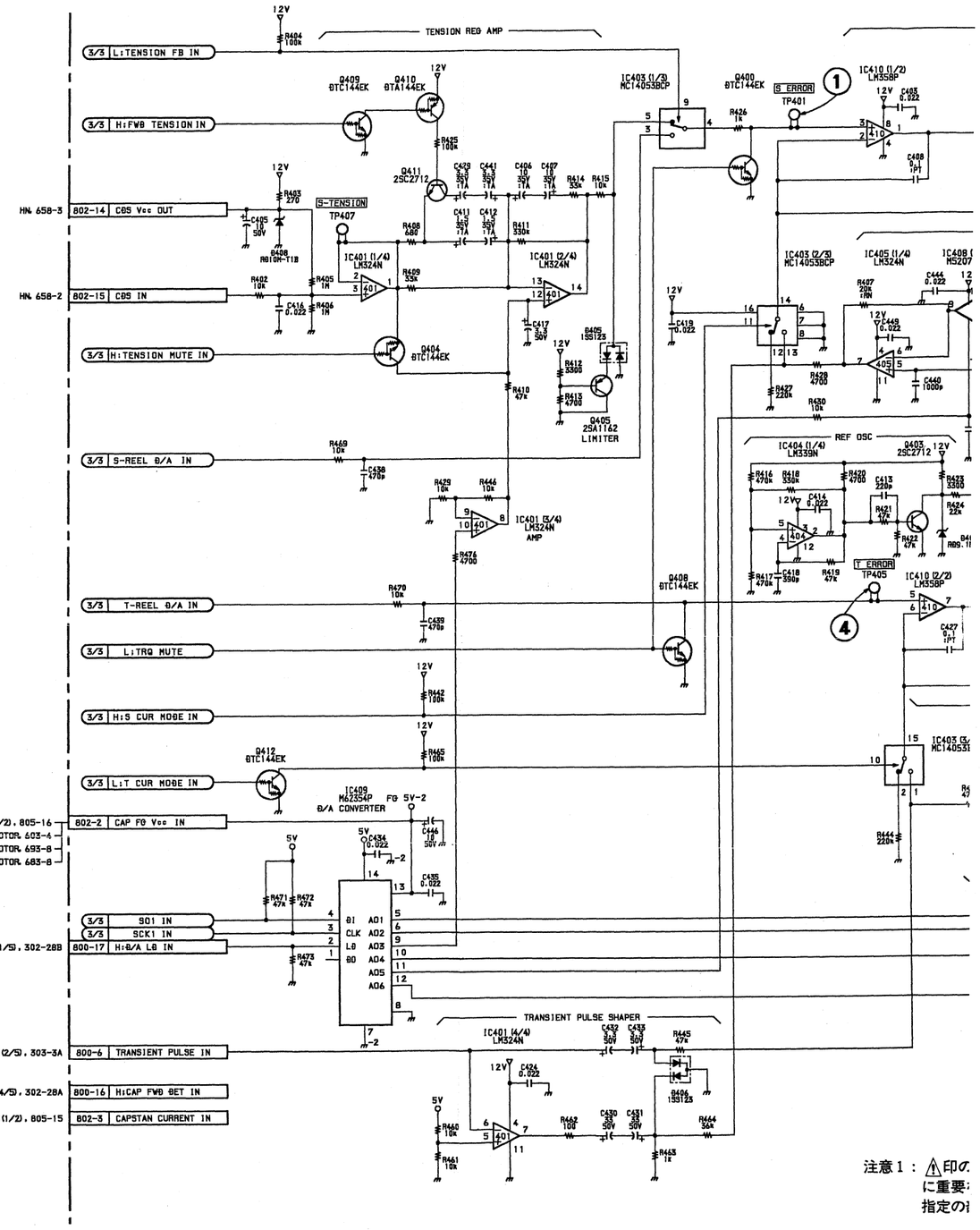

注意1：⚠印の
に重要
指定の

NOTE:
The ⚠-marked
Replace only wi

DR-266 (2/3)

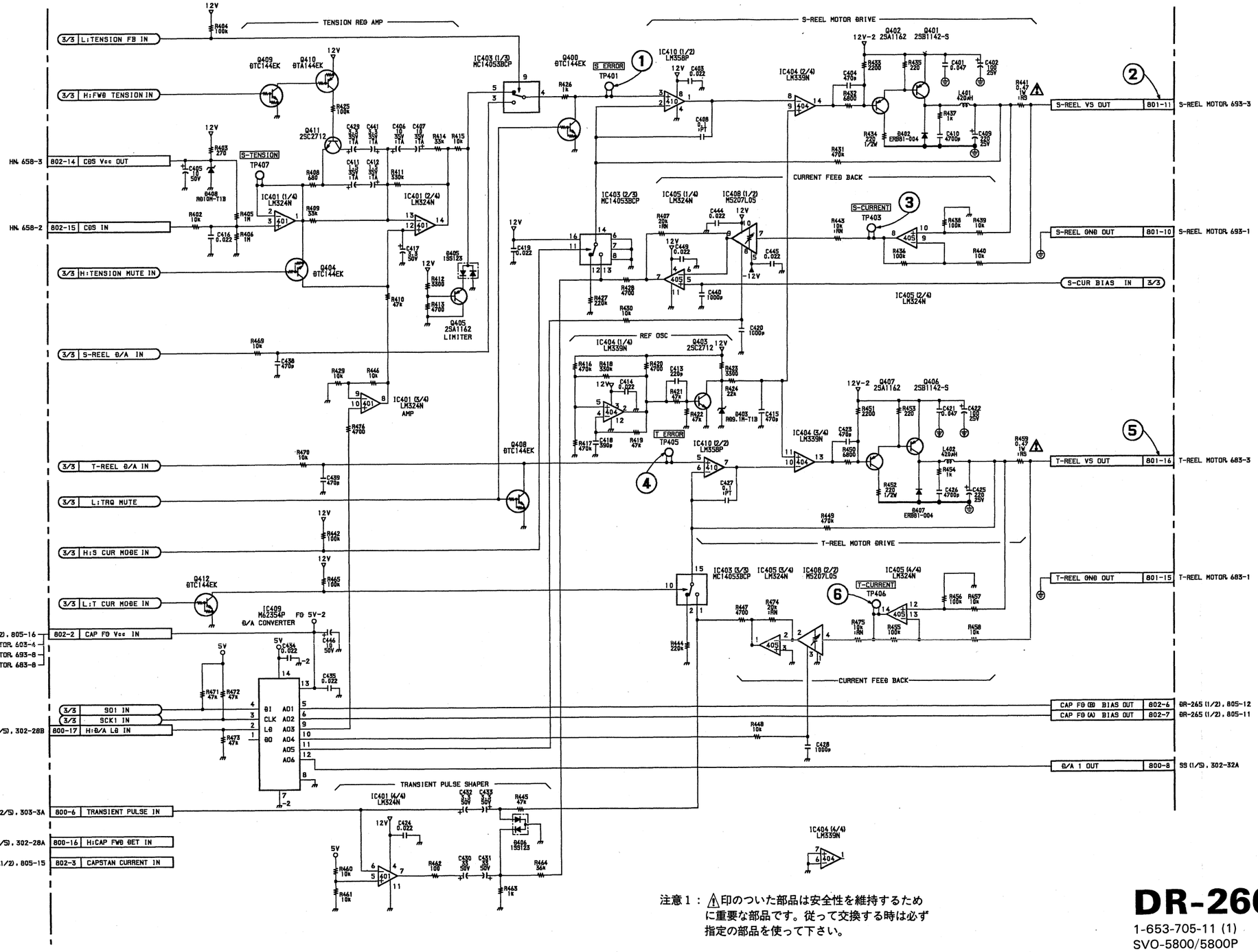

注意1：⚠印のついた部品は安全性を維持するために重要な部品です。従って交換する時は必ず指定の部品を使って下さい。

NOTE:
The ⚠-marked components are critical to safety.
Replace only with same components as specified.

DR-266 (2/3)

1-653-705-11 (1)
SVO-5800/5800P
SVP-5600/5600P

14-53

DR-266 (3/3) ; REEL SERVO CONTROL

① IC701-11 pin PB mode

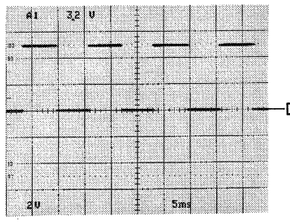

DC 0V

② IC701-3 pin PB mode

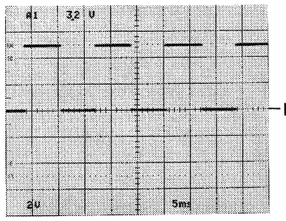

DC 0V

Measurement Condition
PB (S-VHS) mode : KRV-51HN

<PAL>
① IC701-11 pin PB mode

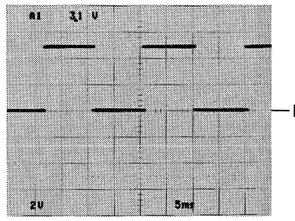

DC 0V

② IC701-3 pin PB mode

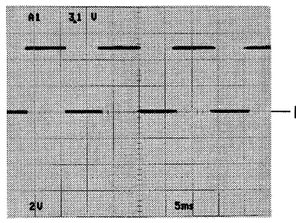

DC 0V

Measurement Condition
PB (S-VHS) mode : KRV-45HPS

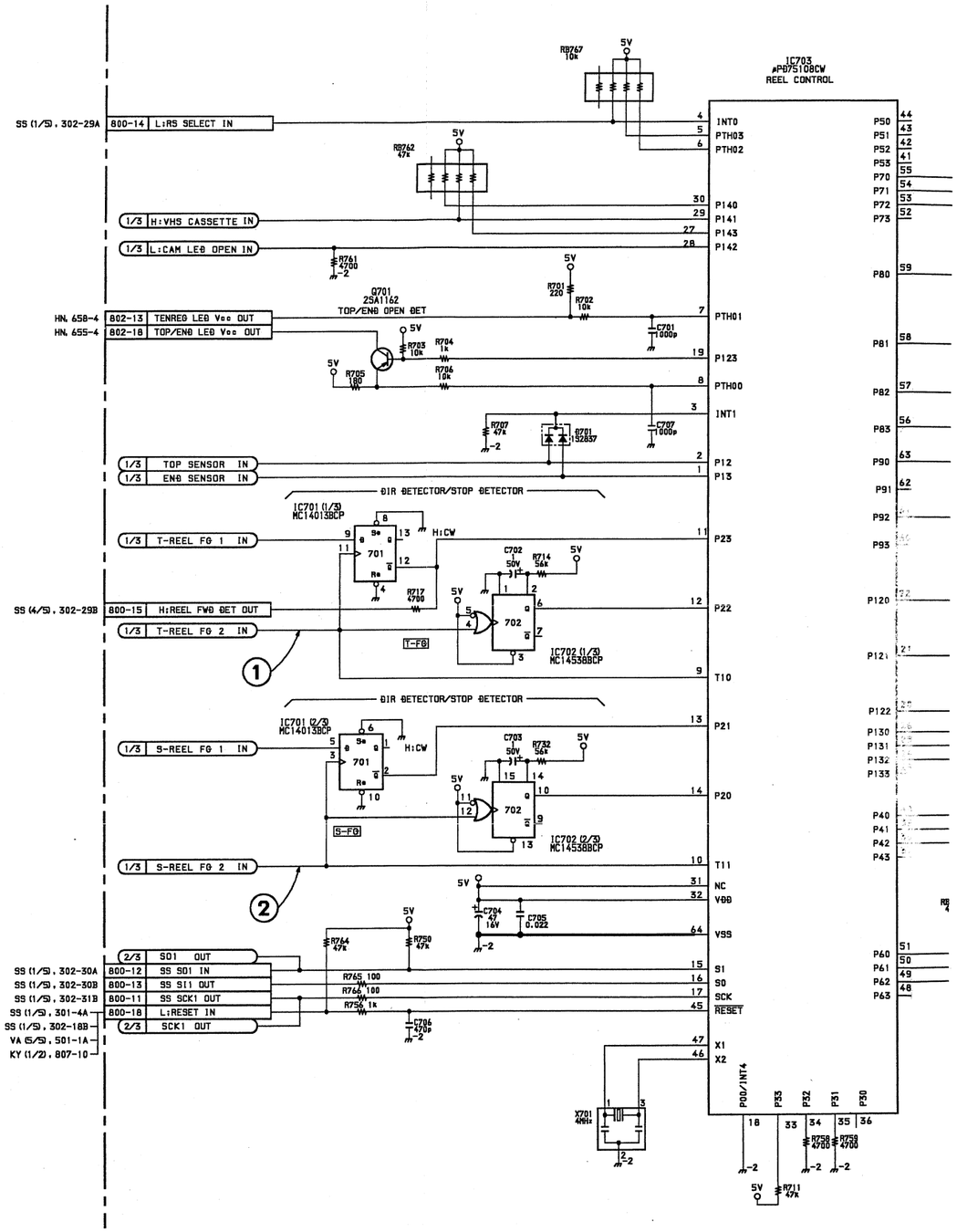

A | B | C | D | E | F | G | H

DR-266 (3/3)

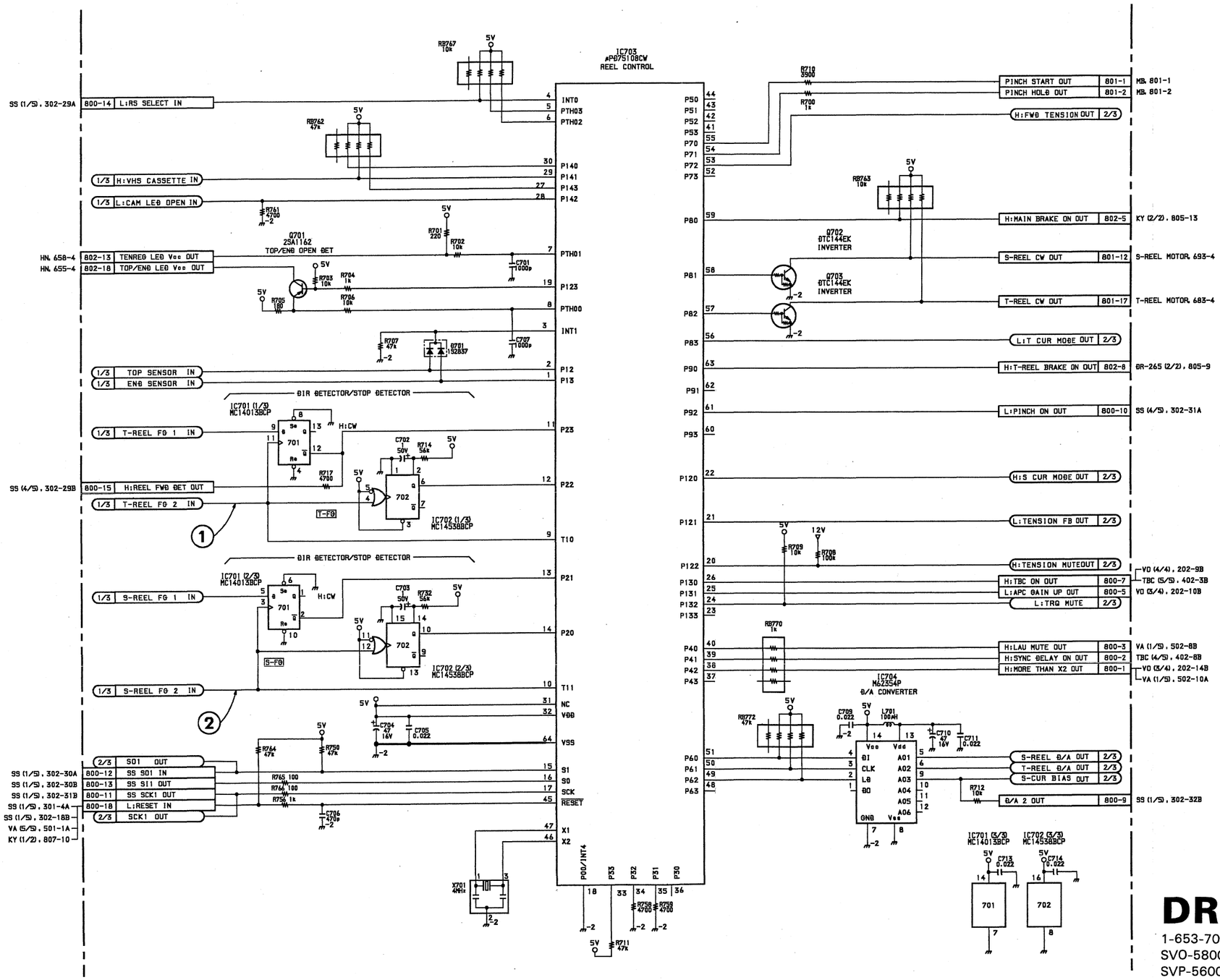

DR-266 (3/3)

1-653-705-11 (1)
SVO-5800/5800P
SVP-5600/5600P

KY-303 ; FUNCTION KEY/LED/SWITCH

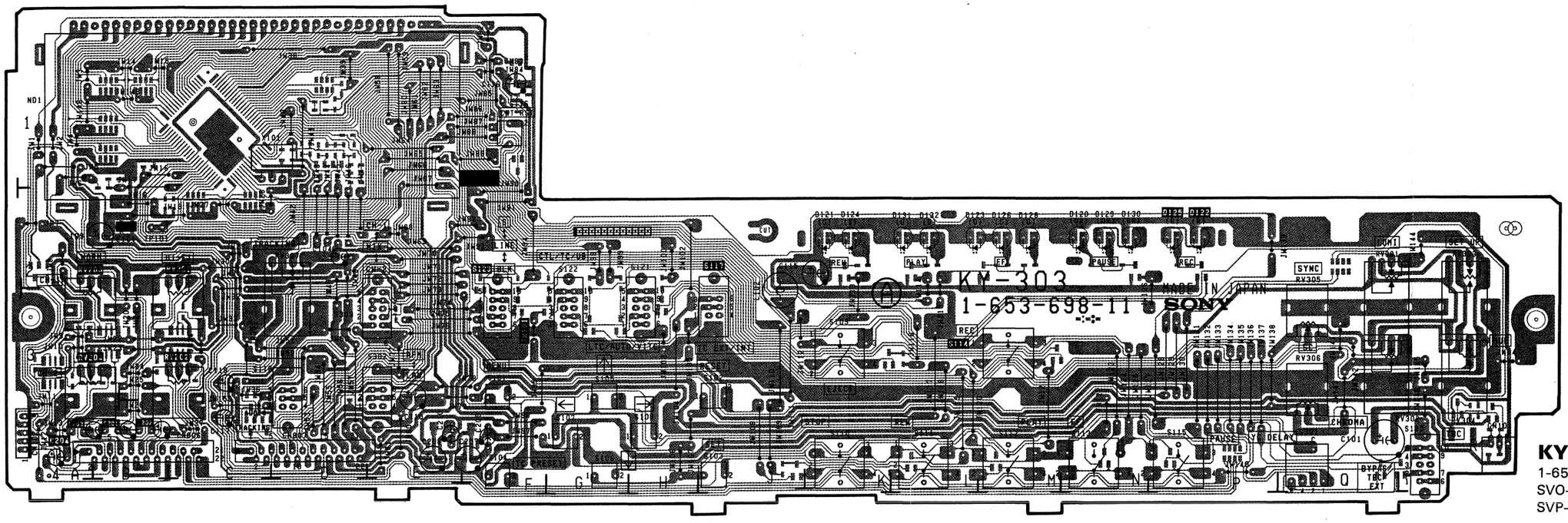

KY-303 — A SIDE —
1-653-698-11 (1)
SVO-5800/5800P
SVP-5600/5600P

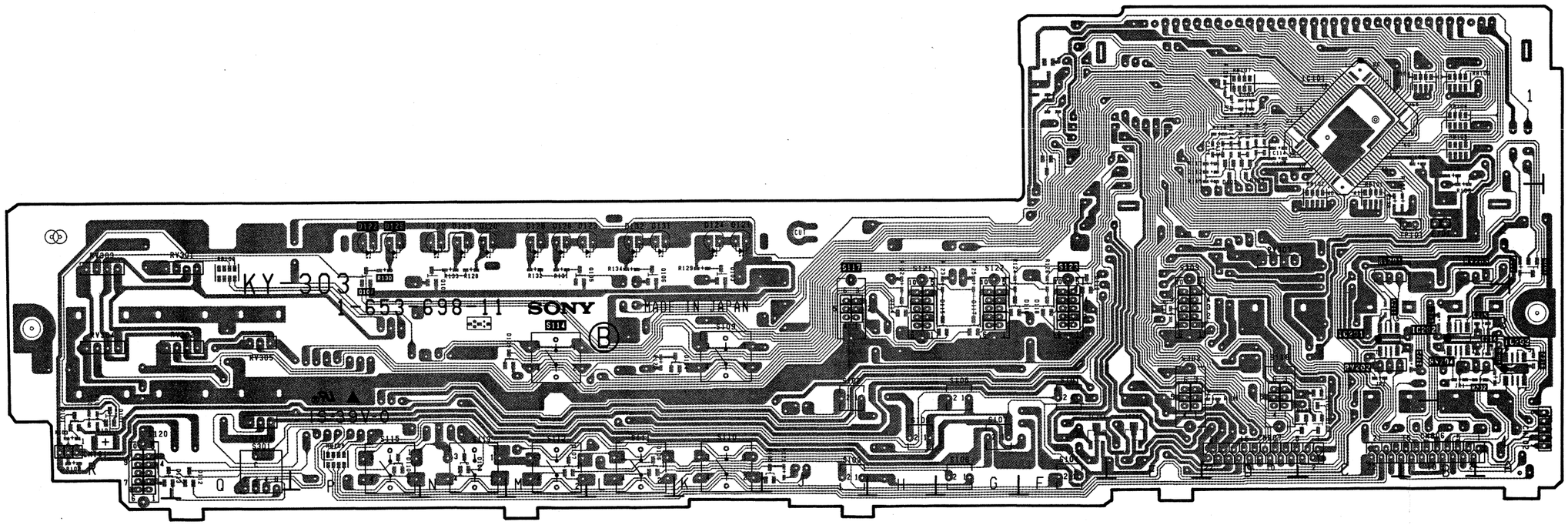

KY-303 — B SIDE —
1-653-698-11 (1)
SVO-5800/5800P
SVP-5600/5600P

KY-303

CN101
CN102
CN806
CN807

D101
D102
D103
D104
D105
D106
D107
D108
D109
D110
D111
D112
D113
D114
D115
D116
D117
D118
D119
D120
D121
○D122
D123
D124
○D125
D126
D127
D128
D129
D130
D131
D132

E101

○IC201
○IC202
○IC203
IC204
IC205

ND1

Q101
Q102
Q103
○Q104
Q105
Q106
Q107
Q108
Q132
○Q201

RB101
RB102
RB103
RB104
RB105
RB106
RB107
RB108
RB109

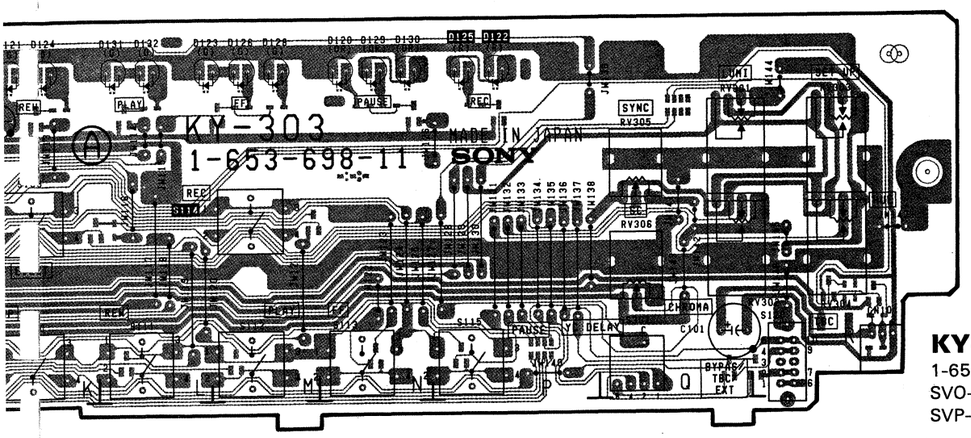

KY-303 — A SIDE —
1-653-698-11 (1)
SVO-5800/5800P
SVP-5600/5600P

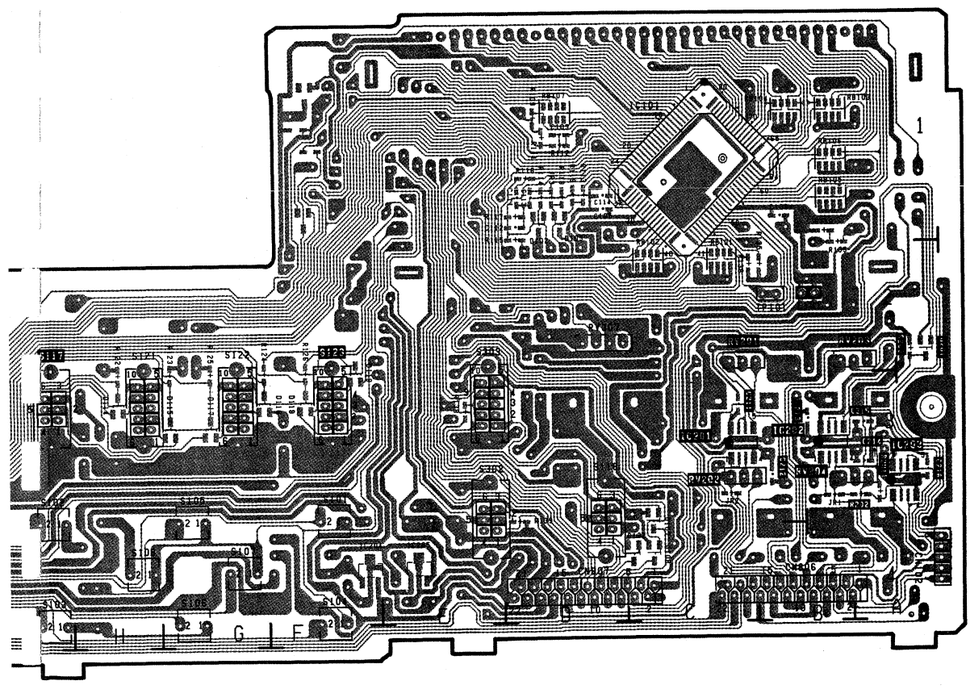

KY-303 — B SIDE —
1-653-698-11 (1)
SVO-5800/5800P
SVP-5600/5600P

KY-303 (1-653-698-11)

CN101	R-4		○RV201	C-3	
CN102	A-4		○RV202	C-3	
CN806	B-4		○RV203	A-3	
CN807	D-4		○RV204	A-3	
			RV301	Q-3	
D101	R-4	*	RV302	Q-3	
D102	D-1	*	RV303	R-3	
D103	D-1	*	RV304	R-3	
D104	K-3	*	RV305	Q-3	
D105	J-4	*	RV306	Q-3	
D106	L-4	*	RV307	D-3	
D107	M-4	*			
D108	N-4	*	S101	F-3	
D109	M-3	*	S102	J-3	
D110	P-4	*	S103	J-4	
D111	F-1	*	S104	F-4	
D112	Q-4	*	S105	G-3	
D113	R-4	*	S106	G-4	
D114	H-3	*	S107	G-4	
D115	G-3	*	S108	H-4	
D116	G-3	*	S109	K-3	
D117	G-3	*	S110	K-4	
D118	F-3	*	S111	L-4	
D119	F-2	*	S112	M-4	
D120	N-2		S113	N-4	
D121	K-2		○S114	M-3	
○D122	P-2		S115	P-4	
D123	L-2		S116	F-1	
D124	K-2		○S117	J-3	
○D125	P-2		S118	D-3	
D126	M-2		S120	R-4	
D127	F-1	*	S121	H-3	
D128	M-2		S122	G-3	
D129	N-2		○S123	F-3	
D130	N-2		S301	Q-4	
D131	L-2		S302	E-3	
D132	L-2		S303	E-3	
E101	B-2		TP101	B-2	
○IC201	C-3	*	X101	D-1	
○IC202	B-3	*			
○IC203	A-3	*			
IC204	F-4	*			
IC205	E-4	*			
ND1	C-1				
Q101	R-4	*			
Q102	N-2	*			
Q103	K-2	*			
○Q104	P-2	*			
Q105	M-2	*			
Q106	L-2	*			
Q107	C-3	*			
Q108	C-4	*			
Q132	C-4	*			
○Q201	A-2	*			
RB101	C-2	*			
RB102	C-2	*			
RB103	B-1	*			
RB104	B-1	*			
RB105	B-1	*			
RB106	B-1	*			
RB107	D-1	*			
RB108	Q-2	*			
RB109	P-4	*			

* mark ; B SIDE mount
○ mark ; SVO-5800/5800P only

KY-303 (1/2) ; FUNCTION KEY/LED/SWITCH
RM-145 ; CONTROL-S REMOTE CONTROL JACK

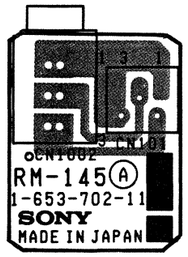

RM-145 — A SIDE —
1-653-702-11 (1)
SVO-5800/5800P
SVP-5600/5600P

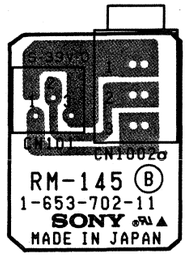

RM-145 — B SIDE —
1-653-702-11 (1)
SVO-5800/5800P
SVP-5600/5600P

RM-145

1-653-702-11 (1)
SVO-5800/5800P
SVP-5600/5600P

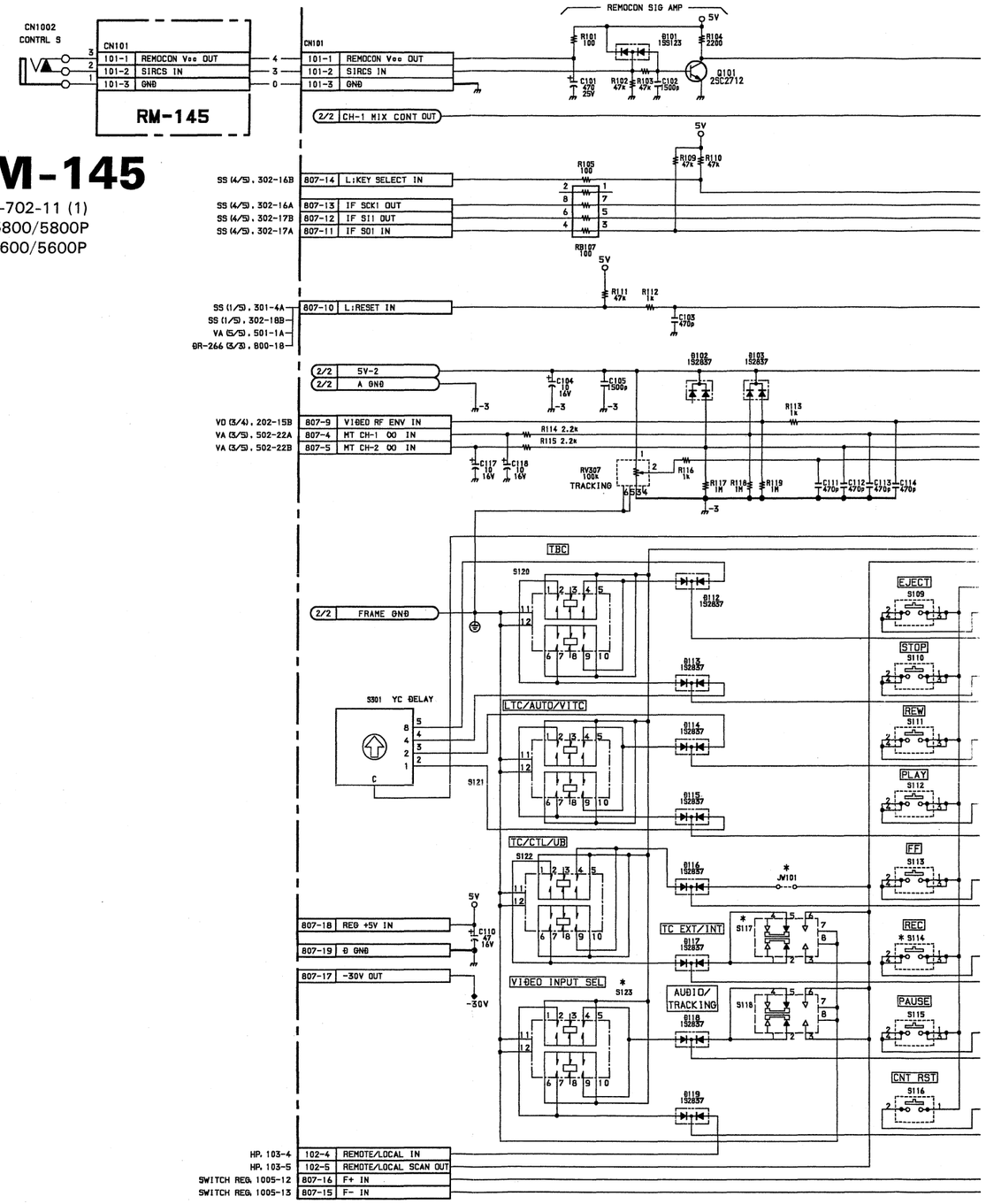

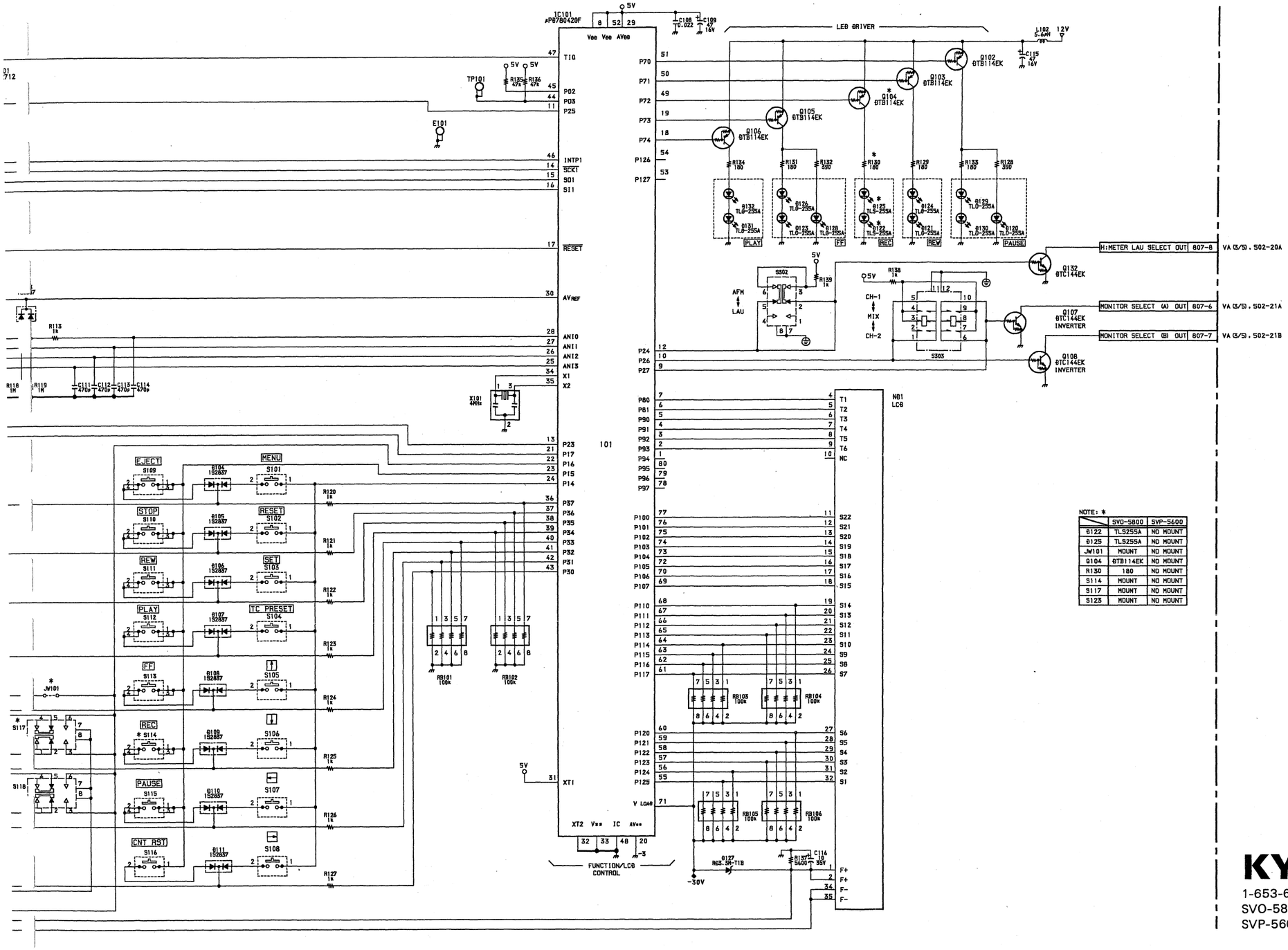

NOTE: *

	SVO-5800	SVP-5600
D122	TLS255A	NO MOUNT
D125	TLS255A	NO MOUNT
JW101	MOUNT	NO MOUNT
Q104	DTB114EK	NO MOUNT
R130	180	NO MOUNT
S114	MOUNT	NO MOUNT
S117	MOUNT	NO MOUNT
S123	MOUNT	NO MOUNT

KY-303 (1/2)

1-653-698-11 (1)
SVO-5800/5800P
SVP-5600/5600P

KY-303 (2/2), HP-64

KY-303 (2/2); FUNCTION KEY/LED SWITCH
HP-64; HEADPHONE JACK/LEVEL/CONTROL & REMOTE SW

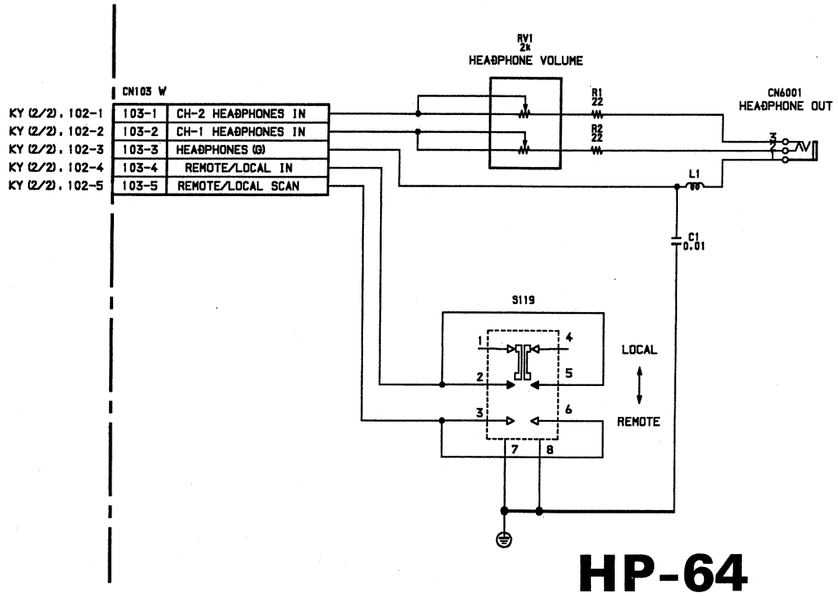

HP-64
1-653-700-11 (1)
SVO-5800/5800P
SVP-5600/5600P

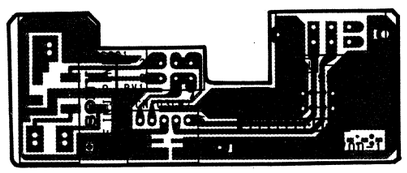

HP-64 — A SIDE —
1-653-700-11 (1)
SVO-5800/5800P
SVP-5600/5600P

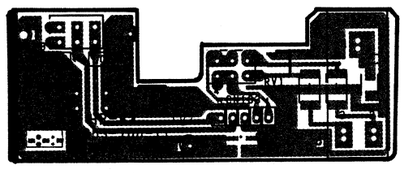

HP-64 — B SIDE —
1-653-700-11 (1)
SVO-5800/5800P
SVP-5600/5600P

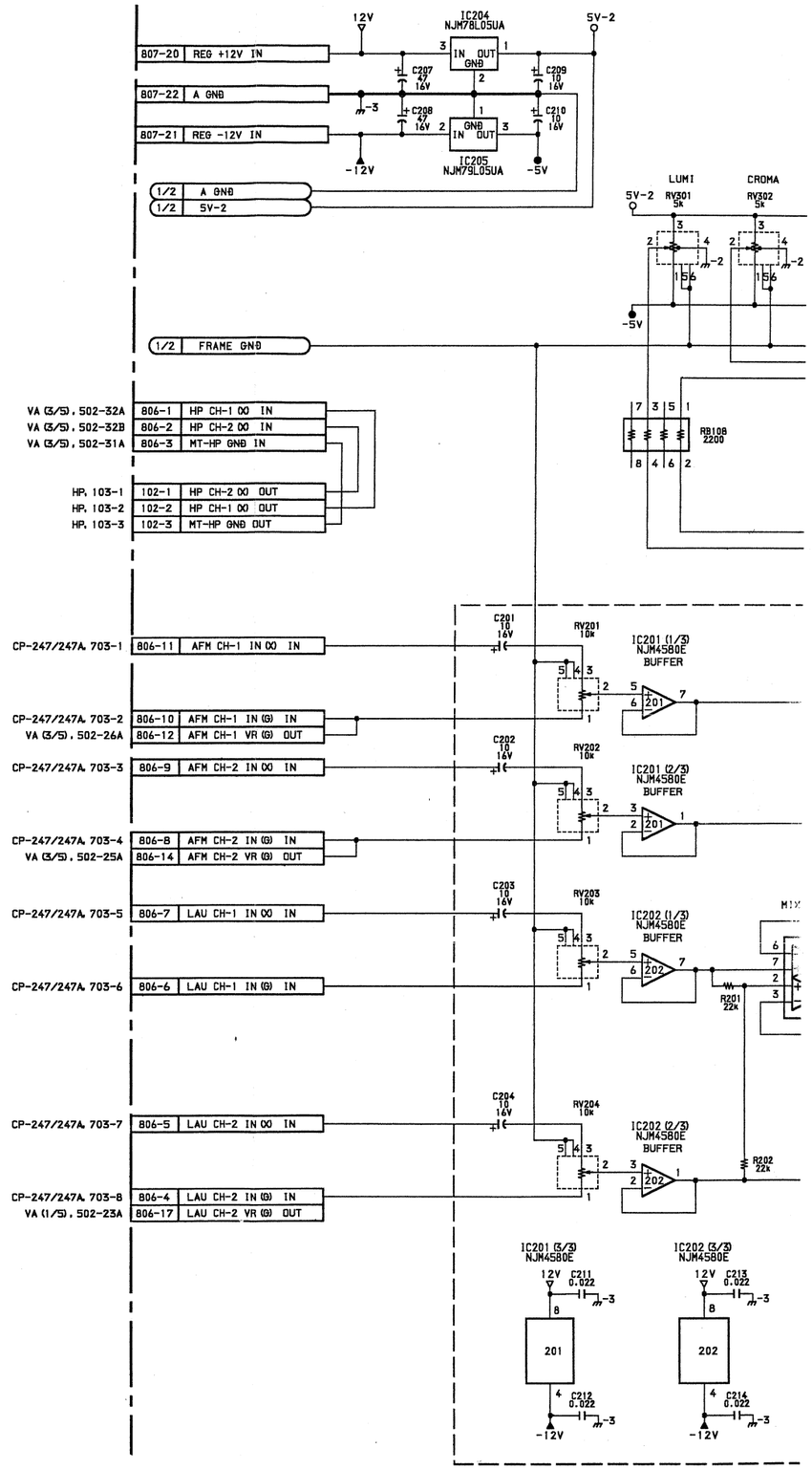

14-59

A | B | C | D | E | F | G | H

KY-303 (2/2), HP-64

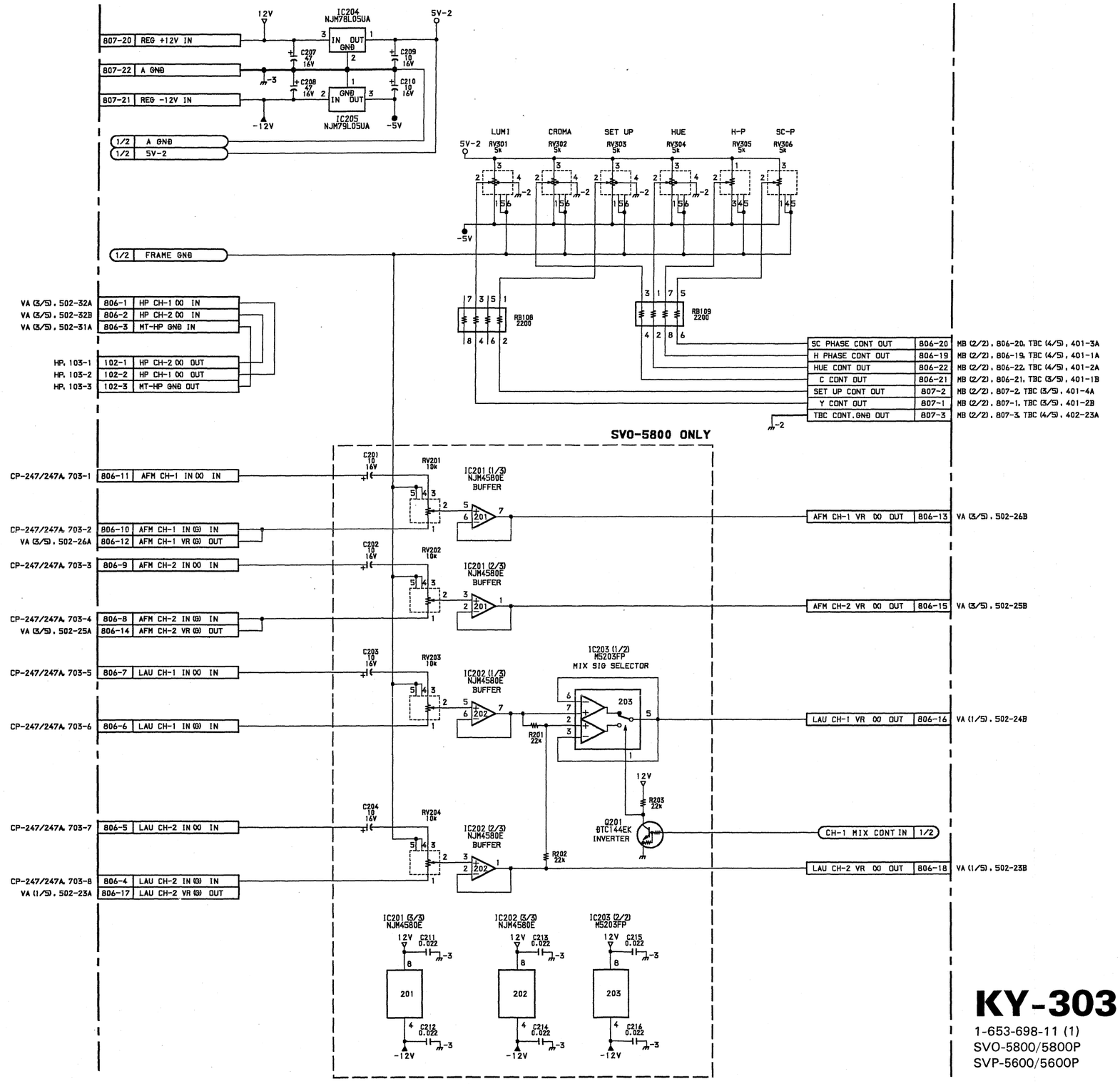

KY-303 (2/2)

1-653-698-11 (1)
SVO-5800/5800P
SVP-5600/5600P

CP-246 ; VIDEO & TIMECODE INPUT/OUTPUT CONNECTOR

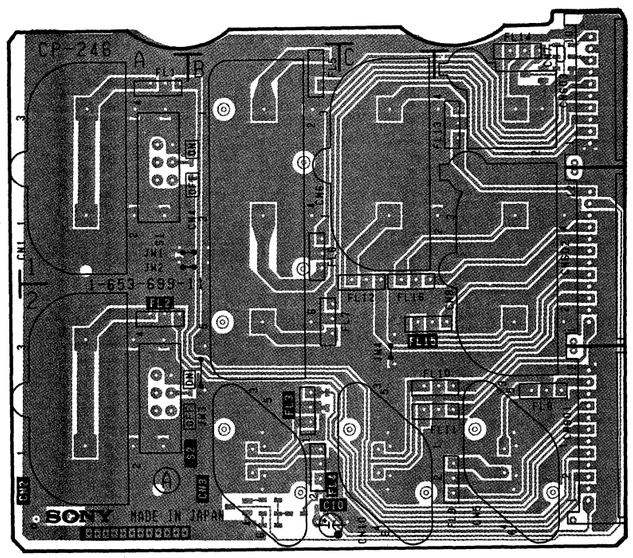

CP-246 — A SIDE —
1-653-699-11 (1)
SVO-5800/5800P
SVP-5600/5600P

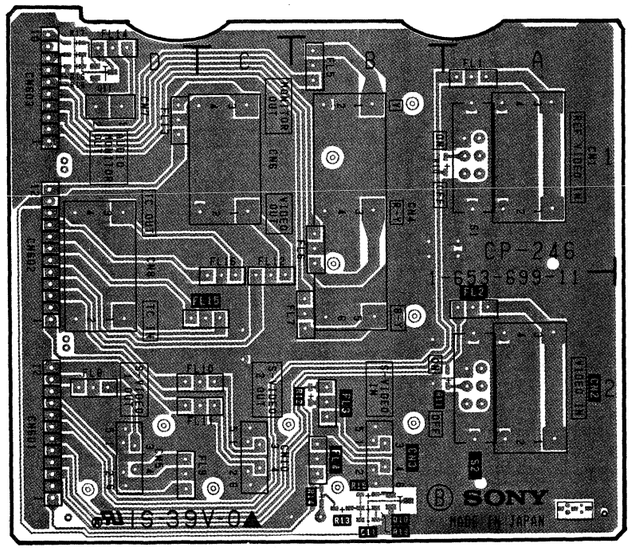

CP-246 — B SIDE —
1-653-699-11 (1)
SVO-5800/5800P
SVP-5600/5600P

CP-246 (1-653-699-11)

CN1	A-1
○CN2	A-2
○CN3	B-2
CN4	B-1
CN5	D-2
CN6	C-1
CN7	D-1
CN8	D-1
CN10	C-2
CN601	D-2
CN602	D-1
CN603	D-1
FL1	A-1
○FL2	A-2
○FL3	B-2
○FL4	B-2
FL5	B-1
FL6	B-1
FL7	B-2
FL8	D-2
FL9	D-2
FL10	C-2
FL11	C-2
FL12	C-2
FL13	D-1
FL14	D-1
○FL15	C-2
FL16	C-2
○Q10	B-2 *
Q11	D-1 *
S1	A-1
○S2	A-2

* mark ; B SIDE mount
○ mark ; SVO-5800/5800P only

CP-246 ; VIDEO & TIMECODE INPUT/OUTPUT CONNECTOR

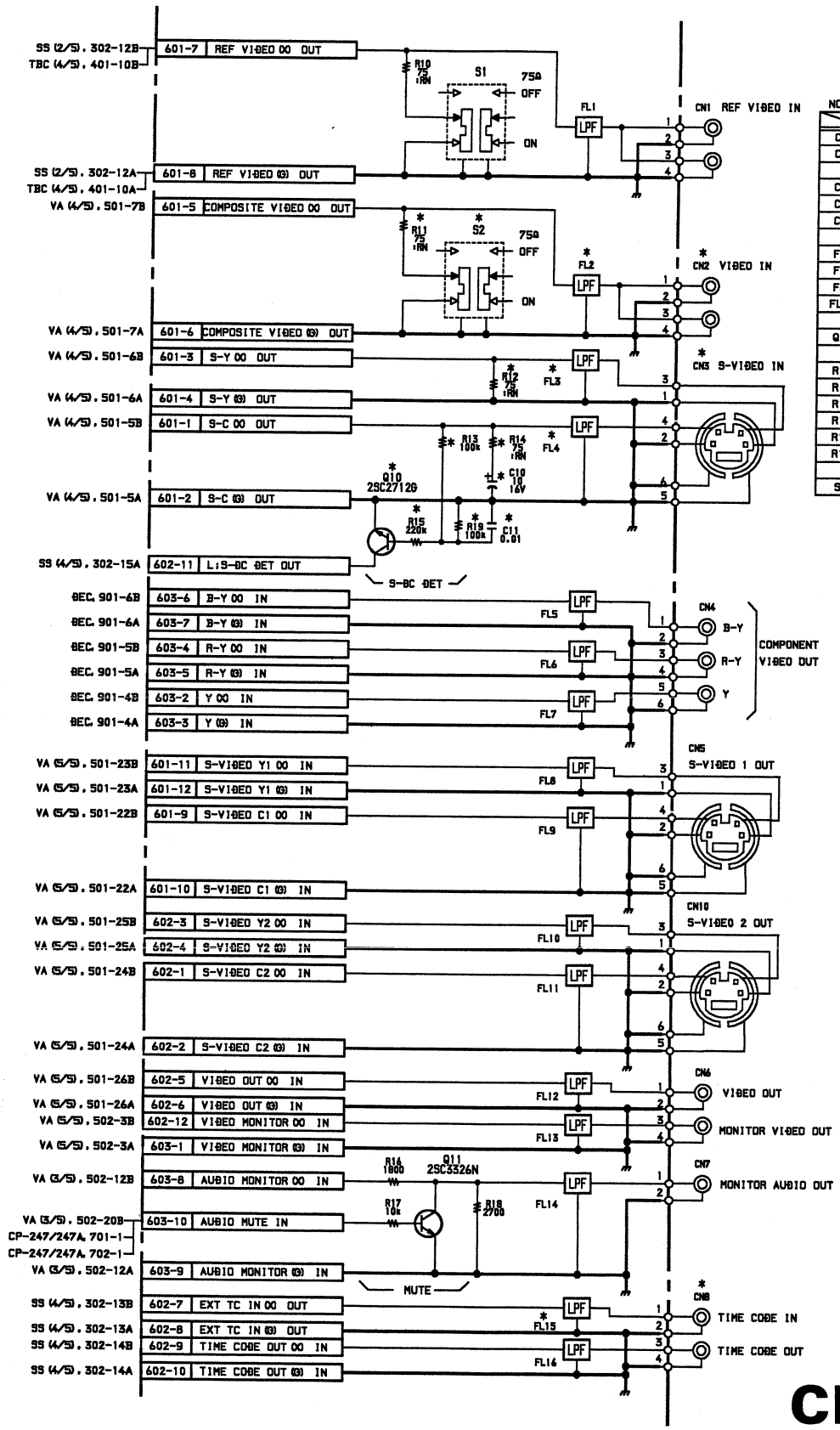

NOTE: *

	SVO-5800	SVP-5600
C10	10/16V	NO MOUNT
C11	0.01	NO MOUNT
CN2	MOUNT	NO MOUNT
CN3	MOUNT	NO MOUNT
CN8	2PIN BNC	1PIN BNC
FL2	MOUNT	NO MOUNT
FL3	MOUNT	NO MOUNT
FL4	MOUNT	NO MOUNT
FL15	MOUNT	NO MOUNT
Q10	2SC2712G	NO MOUNT
R11	75 :RN	NO MOUNT
R12	75 :RN	NO MOUNT
R13	100K	NO MOUNT
R14	75 :RN	NO MOUNT
R15	220K	NO MOUNT
R19	100K	NO MOUNT
S2	MOUNT	NO MOUNT

CP-246

1-653-699-11 (1)
SVO-5800/5800P
SVP-5600/5600P

A B C D

CP-247 ; AUDIO INPUT/OUTPUT CONNECTOR

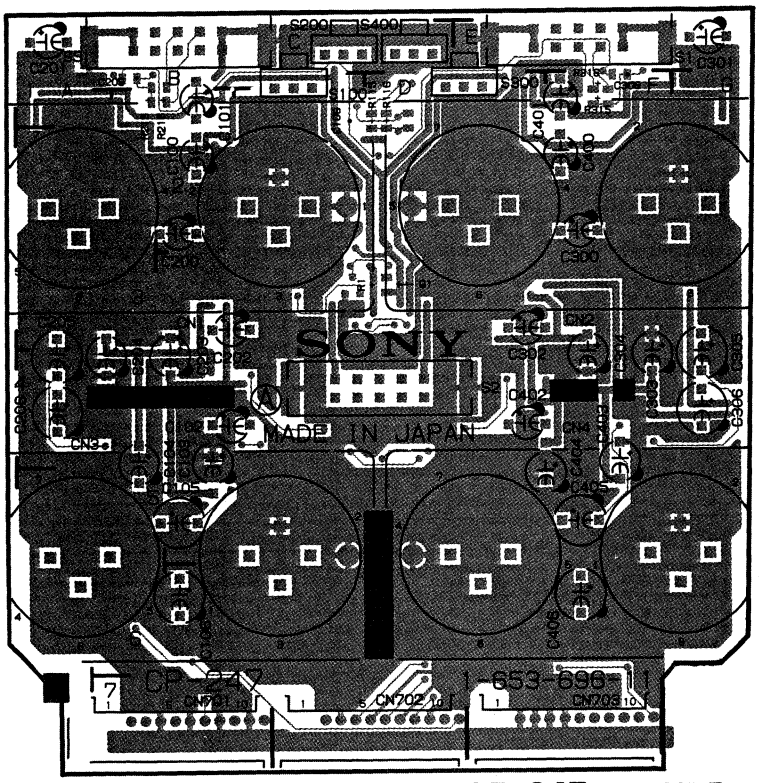

CP-247 — A SIDE —
1-653-696-11 (1)
SVO-5800/5800P
SVP-5600/5600P

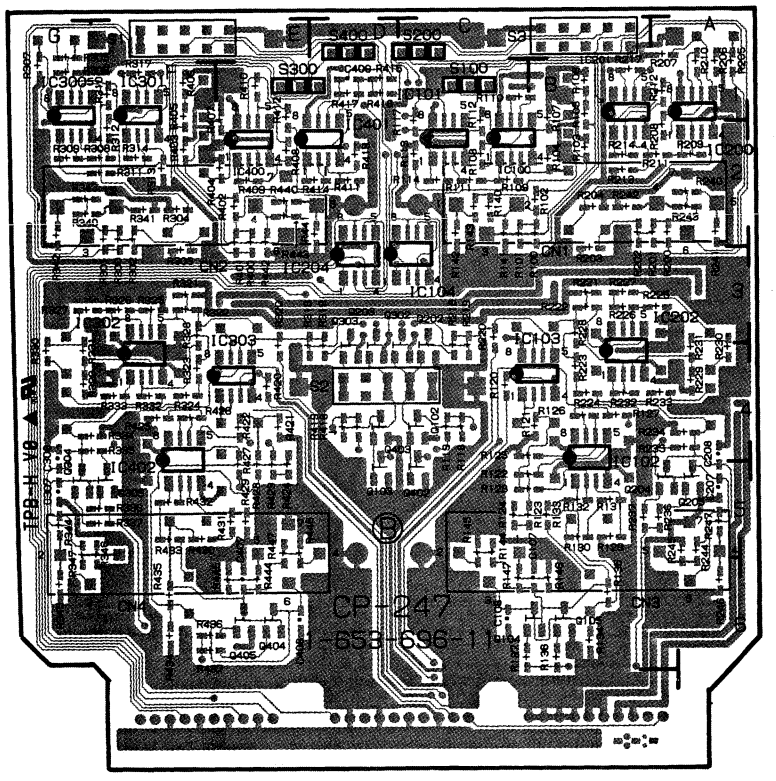

CP-247 — B SIDE —
1-653-696-11 (1)
SVO-5800/5800P
SVP-5600/5600P

CP-247 (1-653-696-11)

○CN1	B-2
○CN2	F-2
CN3	B-5
CN4	F-5
CN701	B-7
CN702	D-7
CN703	F-7
○IC100	C-2 *
○IC101	C-2 *
IC102	B-5 *
IC103	C-4 *
○IC104	D-3 *
○IC200	A-2 *
○IC201	B-2 *
IC202	B-4 *
○IC204	D-3 *
○IC300	G-2 *
○IC301	F-2 *
IC302	F-4 *
IC303	E-4 *
○IC400	E-2 *
○IC401	E-2 *
IC402	F-5 *
○Q1	D-3
Q102	C-4 *
Q103	D-5 *
Q104	C-6 *
Q105	B-6 *
Q202	C-3 *
Q203	D-3 *
Q204	A-5 *
Q205	A-5 *
Q302	D-3 *
Q303	D-3 *
Q304	G-5 *
Q305	F-5 *
Q402	C-5 *
Q403	D-4 *
Q404	E-6 *
Q405	E-6 *
○S1	F-1
S2	D-4
○S3	B-1
○S100	C-1
○S200	C-1
○S300	E-1
○S400	D-1

* mark ; B SIDE mount
○ mark ; SVO-5800/5800P only

CP-247 ; AUDIO INPUT/OUTPUT CONNECTOR

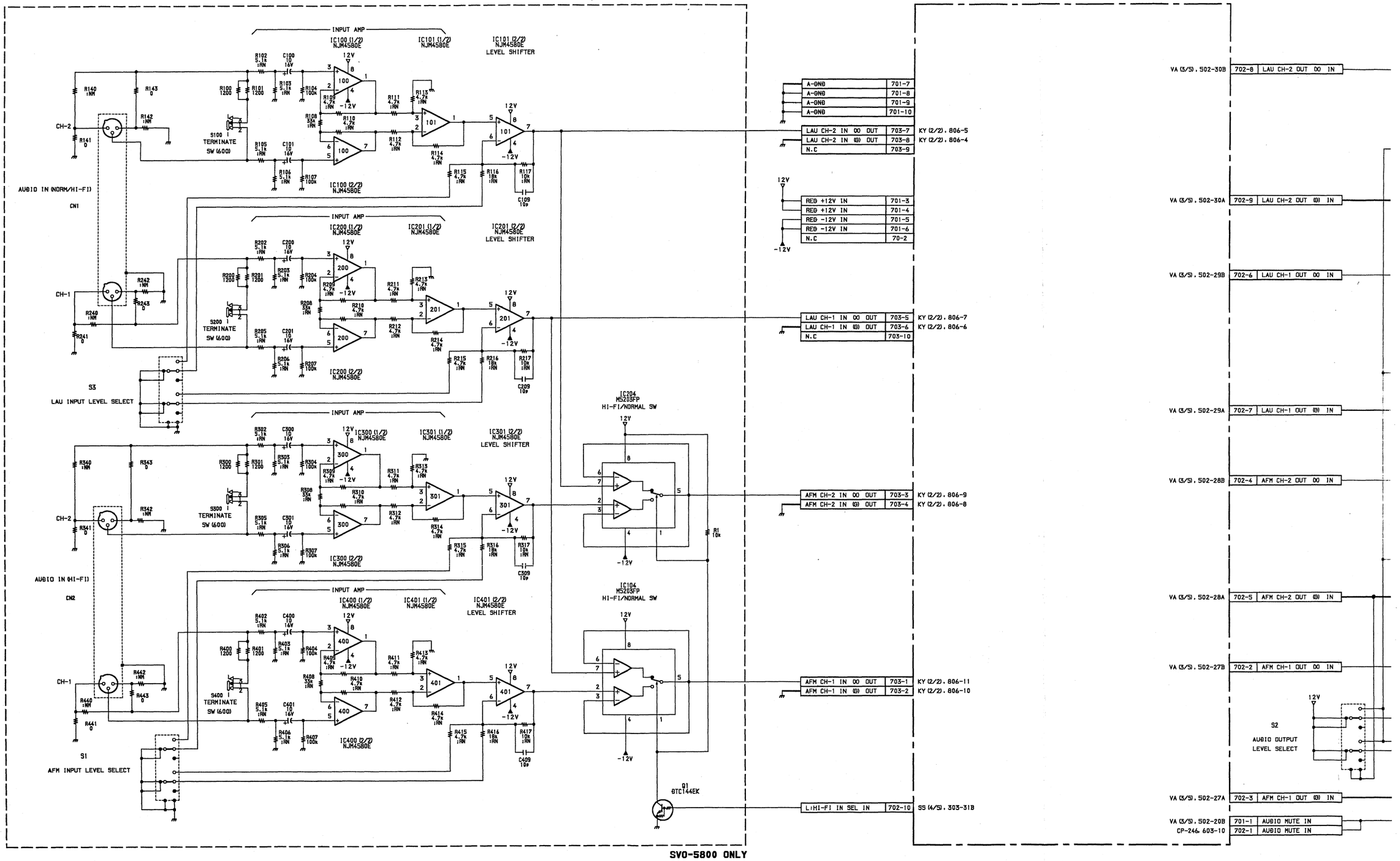

SVO-5800 ONLY

A | B | C | D | E | F | G | H

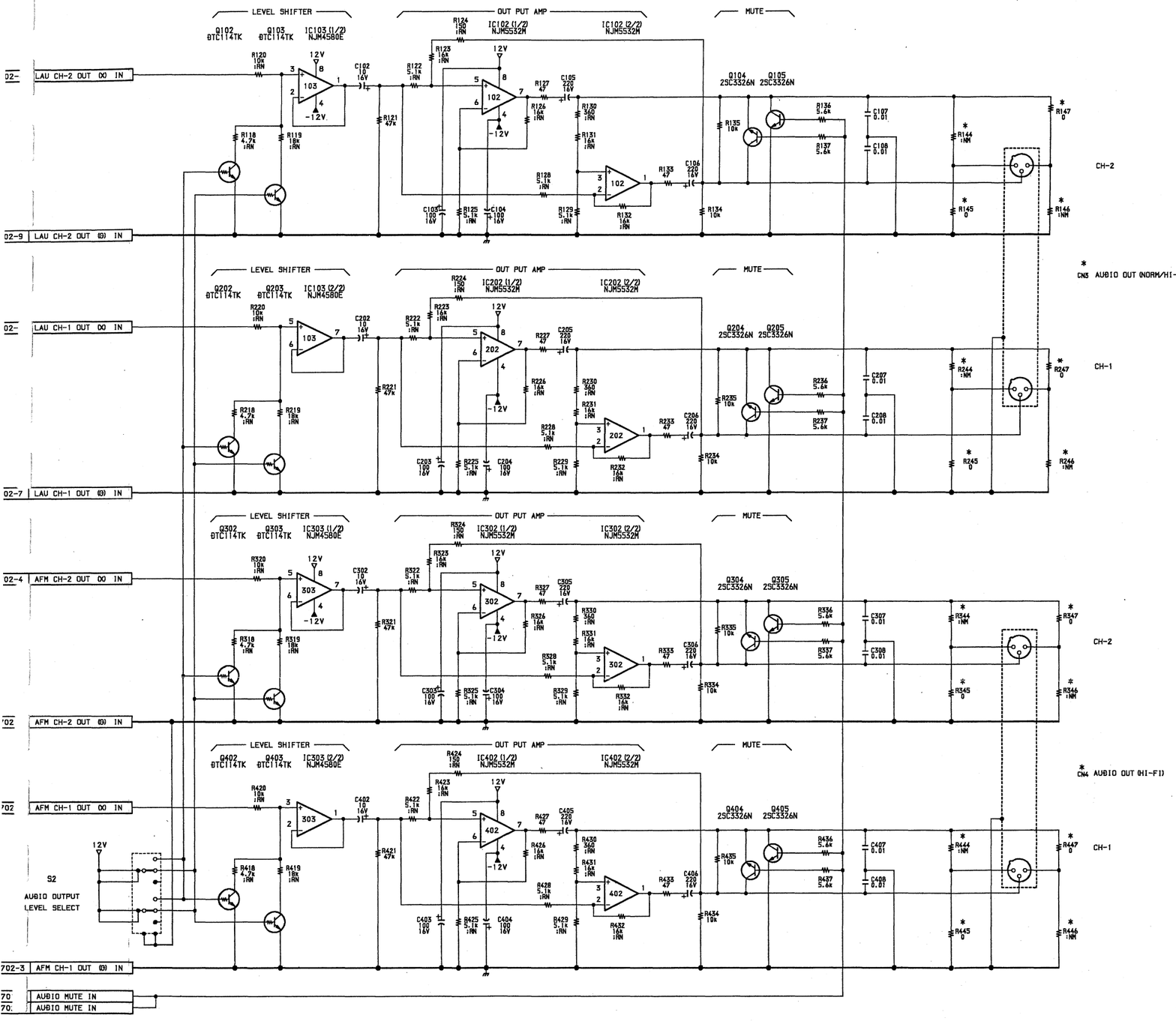

NOTE: *

	SVO-5800 (UC/EK)	SVO-5800 (J)	SVP-5600 (UC/EK)	SVP-5600 (J)
CN1	1-750-786-11	1-750-785-11	NO MOUNT	NO MOUNT
CN2	1-750-786-11	1-750-785-11	NO MOUNT	NO MOUNT
CN3	1-750-785-11	1-750-786-11	1-750-785-11	1-750-786-11
CN4	1-750-785-11	1-750-786-11	1-750-785-11	1-750-786-11
R144	0	NO MOUNT	0	NO MOUNT
R145	NO MOUNT	0	NO MOUNT	0
R146	0	NO MOUNT	0	NO MOUNT
R147	NO MOUNT	0	NO MOUNT	0
R244	0	NO MOUNT	0	NO MOUNT
R245	NO MOUNT	0	NO MOUNT	0
R246	0	NO MOUNT	0	NO MOUNT
R247	NO MOUNT	0	NO MOUNT	0
R344	0	NO MOUNT	0	NO MOUNT
R345	NO MOUNT	0	NO MOUNT	0
R346	0	NO MOUNT	0	NO MOUNT
R347	NO MOUNT	0	NO MOUNT	0
R444	0	NO MOUNT	0	NO MOUNT
R445	NO MOUNT	0	NO MOUNT	0
R446	0	NO MOUNT	0	NO MOUNT
R447	NO MOUNT	0	NO MOUNT	0

CP-247

1-653-696-11 (1)
SVO-5800/5800P
SVP-5600/5600P

MB-535; MOTHER BOARD

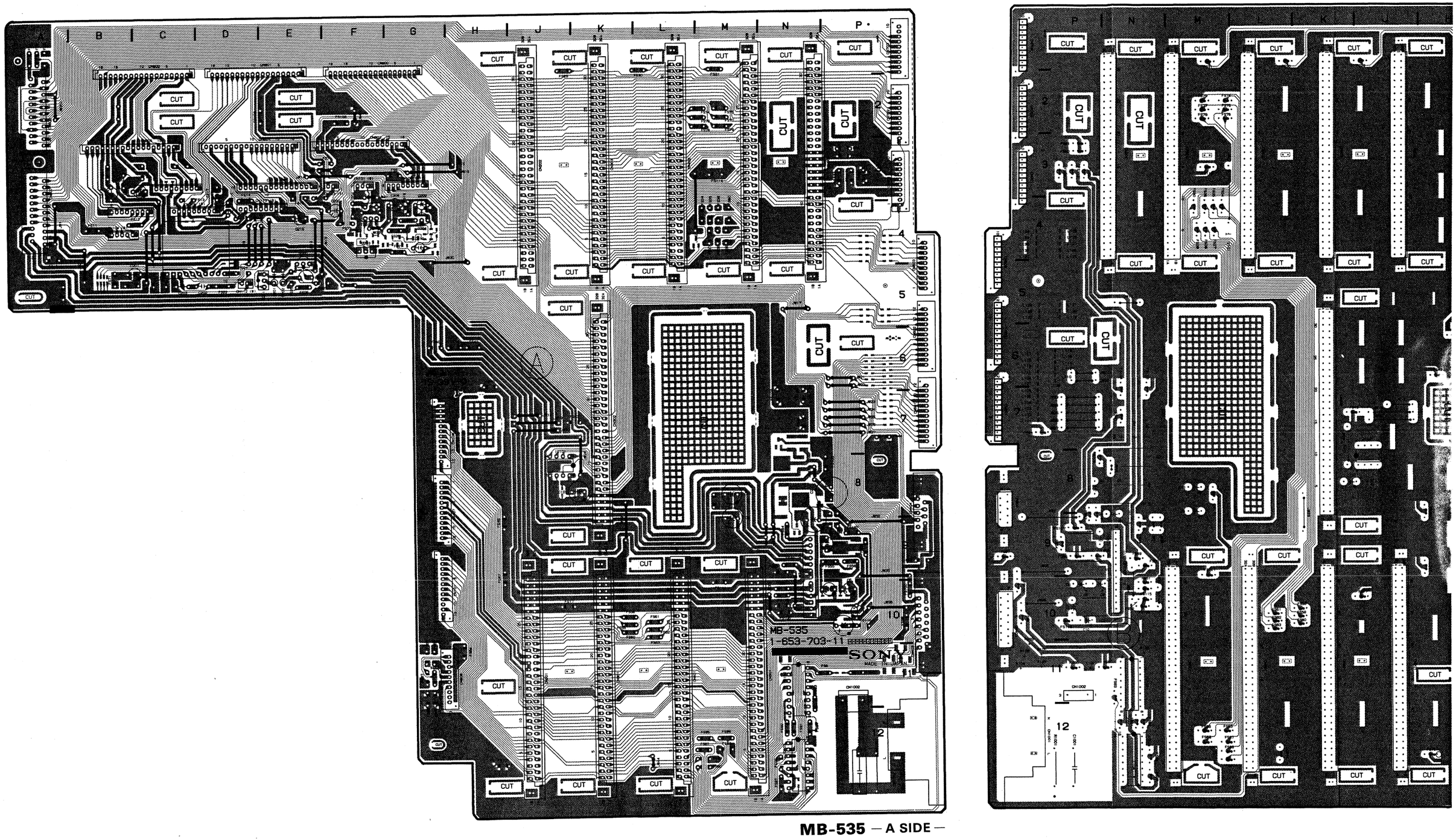

MB-535 — A SIDE —
1-653-703-11 (1)
SVO-5800/5800P
SVP-5600/5600P

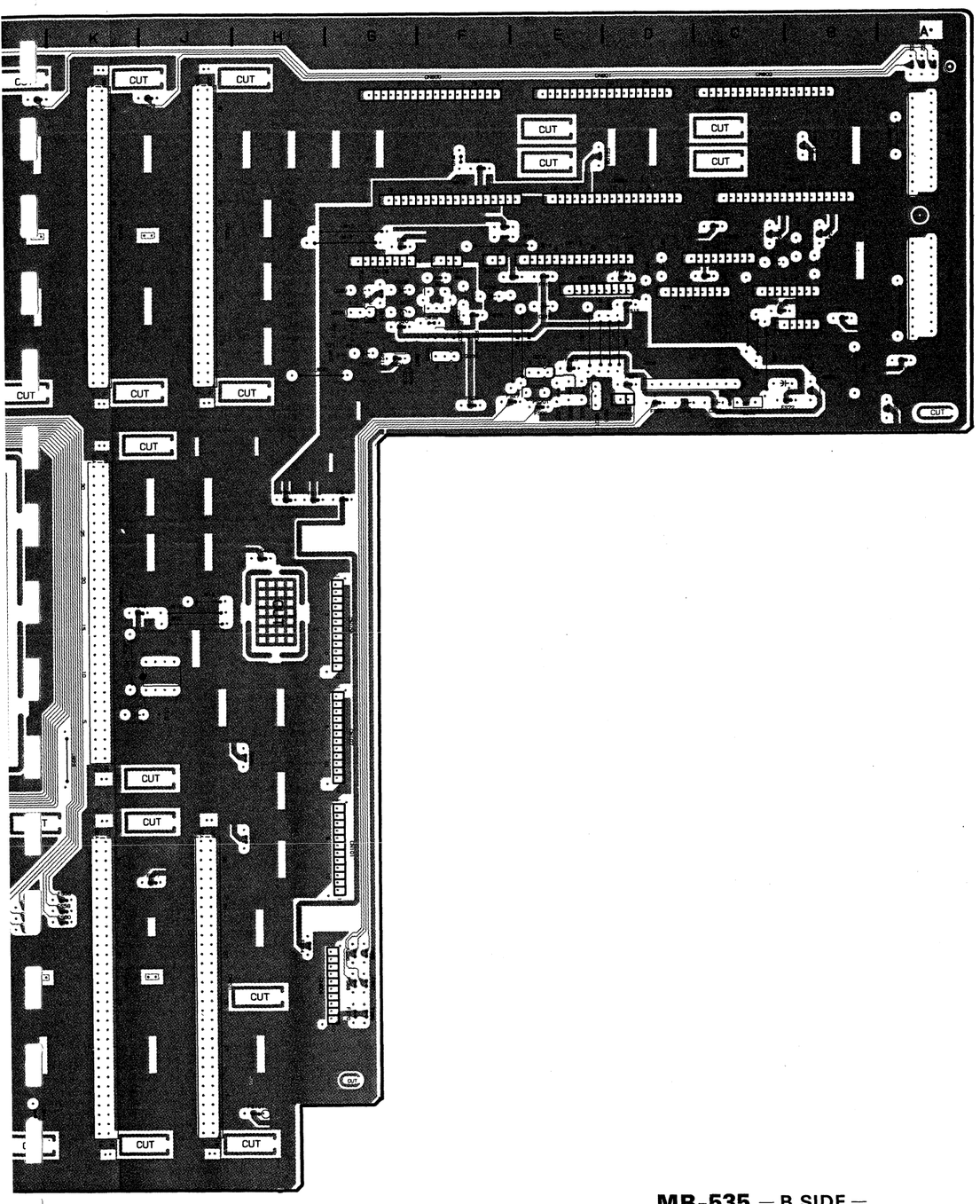

MB-535 — B SIDE —
1-653-703-11 (1)
SVO-5800/5800P
SVP-5600/5600P

MB-535 (1-653-703-11)

CN101	G-9	Q206	G-4 *
CN104	B-4	Q207	G-4 *
CN105	B-4		
CN106	G-3	RB201	B-5 *
CN107	G-8		
CN108	G-7	T201	F-4
CN112	D-5		
CN113	E-3		
CN114	C-3	* mark; B SIDE mount	
CN115	E-3		
CN116	C-4		
CN123	F-3		
CN131	F-3		
CN201	J-11		
CN202	J-3		
CN301	K-11		
CN302	K-7		
CN303	K-3		
CN401	L-11		
CN402	L-3		
CN403	P-10		
CN404	P-8		
CN501	M-11		
CN502	M-3		
CN601	P-7		
CN602	P-6		
CN603	P-5		
CN701	P-3		
CN702	P-2		
CN703	P-1		
CN800	F-1		
CN801	D-1		
CN802	C-1		
CN803	F-2		
CN804	D-2		
CN805	B-2		
CN806	A-2		
CN807	A-3		
CN808	G-11		
CN901	N-3		
CN1001	P-12		
CN1002	P-11		
CN1003	P-9		
D1	N-9 *		
D2	N-7 *		
D201	E-5		
D202	E-5		
D203	G-4 *		
IC1	P-9 *		
IC2	P-10 *		
IC3	P-9 *		
IC101	J-7		
IC102	N-11		
IC103	N-12		
IC201	C-4		
PS201	E-5		
PS202	C-5		
Q1	N-8 *		
Q2	N-8 *		
Q101	M-4 *		
Q201	E-5		
Q202	E-4		
Q203	F-4		
Q204	G-4		
Q205	G-4 *		

MB-535 (1/5); MOTHER BOARD

*CN1001 AC IN LET

CN1002

AC IN (L) OUT	1	CN1002 (1/3)
N.C	2	CN1002 (2/3)
AC IN (N) OUT	3	CN1002 (3/3)

R1001 1M, C1003 0.022 250V

CN1003

1	A GND	
2	B GND	
3	A GND	
4	REG -12V	
5	REG +5.9V	
6	REG +5.9V	
7	REG +12V	
8	REG +12V	
9	+12V PW	
10	M GND	
11	REG -30V	
12	F+	302-2A, 2B, 807-16
13	F-	302-3A, 3B, 807-15

Q1 2SB1204T-FA, Q2 2SB1204T-FA, R1 2200, R2 2200, R3 330, R4 330, C10 470 16V, C11 100 35V, C1 1000 16V, C2 1000 35V, C3 470 16V, C9 470 16V, C4 100 16V, C5 0.047, C6 100 16V, C7 0.047, C8 100 16V, 5.9V, 12V, 12V-2, -12V, -30V, 5V, IC1 PQ05SZ1U

CN403 TBC REMOTE

1	EXT TBC CONT H-P OUT	
2	EXT TBC CONT HUE OUT	
3	EXT TBC CONT SC-P OUT	
4	EXT TBC CONT Y OUT	
5	EXT TBC CONT SET UP OUT	
6	EXT TBC CONT C OUT	
7	REMOTE REG -9V	
8	B GND	
9	FRAME GND	
10	EXT FREEZ ON OUT	301-2A
11	EXT GNR ON OUT	301-2B
12	N.C	
13	N.C	
14	N.C	
15	REMOTE REG +9V	

CN304 REMOTE 1 (9P)

1	FRAME GND	
2	TX (-) IN	302-7A
3	RX (+) OUT	302-6B
4	B GND	
5	N.C	
6	B GND	
7	TX (+) IN	302-7B
8	RX (-) OUT	302-6A
9	FRAME GND	

RP-74

CN101

1	H:S-VHS IN	201-9B, 301-7B, 401-9B, 501-4B
2	C ROT OUT	201-7A, 301-3A, 401-5A
3	VIDEO SW PULSE IN	201-7B, 301-3B, 401-5B
4	PB CHROMA RF (G) OUT	201-6A
5	PB CHROMA RF (C) OUT	201-6B
6	PB Y RF (G) OUT	201-5A
7	PB Y RF (C) OUT	201-5B
8	PB S-VHS Y RF (G) OUT	201-4A
9	PB S-VHS Y RF (C) OUT	201-4B
10	N.C	
11	REC RF (G) IN	201-2A
12	REC RF (C) IN	201-2B

RP-74

CN107

1	GO PULSE IN	201-22A, 301-22A, 401-24A
2	REC PB SYNC IN	201-21A, 301-21A
3	H:FE ON IN	201-21B, 301-21B
4	VIDEO REG +9V	201-20B
5	VIDEO REG +5V	107-6, 201-18B, 19B
6	VIDEO REG +5V	107-5, 201-18B, 19B
7	PB FSC (G) IN	201-13A
8	PB FSC (C) IN	201-13B, 301-12B, 401-14B
9	L:V REC CURR ON IN	201-12A, 301-10A
10	H:EP SELECT IN	201-12B, 301-10B
11	RP MODE CONT IN	201-11A, 301-9A
12	H:V REC MODE IN	201-11B, 301-9B

RP-74

CN108

1	A GND	
2	A GND	
3	A GND	
4	A GND	
5	AFM EE/PB IN	201-26A, 301-26A, 502-7A
6	AFM SW PULSE IN	201-26B, 301-26B, 502-7B
7	REC AFM RF (G) IN	201-25A, 301-25A, 401-26A, 502-6A
8	REC AFM RF (C) IN	201-25B, 301-25B, 401-26B, 502-6B
9	PB AFM RF (G) OUT	201-24A, 301-24A, 401-25A, 502-5A
10	PB AFM RF (C) OUT	201-24B, 301-24B, 401-25B, 502-5B
11	H:AFM REC CURR ON IN	201-23A, 301-23A
12	H:S-VHS GET OUT	201-23B, 301-23B

注意1：⚠印のついた部品は安全性を維持するために重要な部品です。従って交換する時は必ず指定の部品を使って下さい。

NOTE:
The ⚠-marked components are critical to safety.
Replace only with same components as specified.

IC102 (1/4) MC14053BCP, IC102 (2/4) MC14053BCP, IC102 (3/4) MC14053BCP, IC103 (1/4) MC14053BCP, IC103 (2/4) MC14053BCP, IC103 (3/4) MC14053BCP, IC102 (4/4) MC14053BCP, IC103 (4/4) MC14053BCP

806-21, INT TBC CONT C
403-6, EXT TBC CONT C
401-1B, TBC CONT C
807-2, INT TBC CONT SET UP
403-5, EXT TBC CONT SET UP
401-4A, TBC CONT SET UP
806-19, INT TBC CONT H-P
403-1, EXT TBC CONT H-P
401-1A, TBC CONT H-P
807-1, INT TBC CONT Y
403-4, EXT TBC CONT Y
401-2B, TBC CONT Y
806-20, INT TBC CONT SC-P
403-3, EXT TBC CONT SC-P
401-3A, TBC CONT SC-P
806-22, INT TBC CONT HUE
403-2, EXT TBC CONT HUE
401-2A, TBC CONT HUE
402-2B, H:EXT TBC CONT

R102 1k, R103 1k, R104 1k, R105 1k, R106 1k, R107 1k, R108 10k, C103 0.022, C104 0.022, REMOTE REG +9V, REMOTE REG -9V, Q101 DTC144EK

VO-47

CN201

	B		A	
301-1B, 401-3B	TBC EE/PB IN	1	GEW SENSOR	301-1A, 808-7
101-12	REC RF (G) OUT	2	REC RF (C) OUT	101-11
	N.C	3	N.C	
101-9	PB S-VHS Y RF (G) IN	4	PB S-VHS Y RF (C) IN	101-8
101-7	PB Y RF (G) IN	5	PB Y RF (C) IN	101-6
101-5	PB CHROMA RF (G) IN	6	PB CHROMA RF (C) IN	101-4
101-3, 301-3B, 401-5B	VIDEO SW PULSE IN	7	C ROT IN	101-2, 301-3A, 401-5A
	N.C	8	N.C	
101-1, 301-7B, 401-9B, 501-4B	H:S-VHS IN	9	VIN SYNC IN	301-7A, 401-9A, 501-4A
301-8B, 401-13B	GASI V8 IN	10	H:REC STANBY IN	301-8A
107-12, 301-9B	H:V REC MODE	11	RP MODE CONT	107-11, 301-9A
107-10, 301-10B	H:EP SELECT	12	L:V REC CURR ON	107-9, 301-10A
107-8, 301-12B, 401-14B	PB FSC (G) OUT	13	PB FSC (C) OUT	107-7
301-13B, 401-15B, 501-12B	EE FSC (G) OUT	14	EE FSC (C) OUT	301-13A, 401-15A, 501-12A
301-15B, 401-17B, 501-14B	H:VIDEO COLOR OUT	15	H:VIDEO MUTE IN	301-15A, 401-17A, 501-14A
301-16B, 401-18B, 501-15B	REC C (G) IN	16	REC C (C) IN	301-16A, 401-18A, 501-15A
301-17B, 401-19B, 501-16B	REC Y (G) IN	17	REC Y (C) IN	301-17A, 401-19A, 501-16A
107-5, 4, 201-19B	VIDEO REG +5V OUT	18	S-VIDEO/COMPOSITE IN	301-18A, 401-20A, 501-17A
107-5, 4, 201-18B	VIDEO REG +5V OUT	19	H:EDIT ON IN	301-19A, 401-21A, 501-18A
107-4	VIDEO REG +9V OUT	20	PB VITC Y OUT	301-20A
107-3, 301-21B	H:FE ON	21	REC PB SYNC OUT	107-2, 301-21A
	N.C	22	GO PULSE OUT	107-1, 301-22A, 401-24A
108-12, 301-23B	H:S-VHS GET	23	H:AFM REC CURR ON	108-11, 301-23A
108-10, 301-24B, 401-25B, 502-5B	PB AFM RF (G)	24	PB AFM RF (G)	108-9, 301-24A, 401-25A, 502-5A
108-8, 301-25B, 401-26B, 502-6B	REC AFM RF (C)	25	REC AFM RF (G)	108-7, 301-25A, 401-26A, 502-6A
108-6, 301-26B, 502-7B	AFM SW PULSE	26	AFM EE/PB	108-5, 301-26A, 502-7A
	A GND	27	A GND	
	A GND	28	A GND	
	REG -12V	29	REG -12V	
	REG +5.9V	30	REG +5.9V	
	REG +12V	31	REG +12V	
	B GND	32	B GND	

5V, R101 47k, C101 47 16V, C102 0.022, IC101 BR9021B

302-8A, EE-PROM CS IN
302-9B, EE-PROM SCK IN
302-9A, EE-PROM SI IN
302-10B, EE-PROM SO OUT
EE-PROM R/B OUT, 302-6B

IC2 L79M09T-FA-TL, REG -12V, REMOTE REG -9V, C7 47 16V

IC3 L78M09T-FA-TL, REG +12V, REMOTE REG +9V, C8 47 16V

VO-47

CN202

	B		A	
	N.C	1	N.C	
	N.C	2	N.C	
	N.C	3	N.C	
	N.C	4	N.C	
	N.C	5	N.C	
	N.C	6	N.C	
	N.C	7	N.C	
	N.C	8	N.C	
303-3B, 402-3B, 800-7	H:TBC ON IN	9	TRANSIENT PULSE	303-3A, 800-6
800-5	L:APC GAIN UP IN	10	H:LAU MUTE	303-5B, 402-5B, 502-6B, 800-3
303-6B, 402-6B	PB Y (G) OUT	11	PB Y (G) OUT	303-6A, 402-6A
303-7B, 402-7B	PB C (G) OUT	12	PB C (G) OUT	303-7A, 402-7A
	N.C	13	H:SYNC DELAY ON	303-8B, 402-8B, 800-2
303-10A, 402-10A, 502-10A, 800-1	H:MORE THAN X2 IN	14	L:VHS CASSETTE	104-3, 303-11B, 402-11B, 502-11B, 802-17
807-9	VIDEO RF ENV OUT	15	N.C	
	N.C	16	N.C	
	N.C	17	N.C	
	N.C	18	N.C	
	N.C	19	H:MT LAU SEL	303-19A, 402-19A, 502-20A, 807-8
303-20B, 402-20B, 502-21B, 807-7	MONITOR SEL B	20	MONITOR SEL A	303-20A, 402-20A, 502-21A, 807-6
303-21B, 402-21B, 502-22B, 807-5	MT CH-1 (C) OUT	21	MT CH-1 (G) OUT	303-21A, 402-21A, 502-22A, 807-4
	N.C	22	SPARE	303-22A
303-23B, 402-23B	PB 135. BURST OUT	23	TBC CONT GND	303-23A, 402-23A, 807-3
303-24B, 402-24B, 807-2	INT TBC CONT SET UP	24	INT TBC CONT Y	303-24A, 402-24A, 807-1
303-25B, 402-25B, 806-22	INT TBC CONT HUE	25	INT TBC CONT C	303-25A, 402-25A, 806-21
303-26B, 402-26B, 806-20	INT TBC CONT SC-P	26	INT TBC CONT H-P	303-26A, 402-26A, 806-19
303-27B, 402-27B, 502-23B, 806-18	LAU CH-2 VR (C)	27	LAU CH-2 VR (G)	303-27A, 402-27A, 502-23A, 806-17
303-28B, 402-28B, 502-24B, 806-16	LAU CH-1 VR (C)	28	LAU CH-1 VR (G)	303-28A, 402-28A, 502-24A
303-29B, 402-29B, 502-25B, 806-15	AFM CH-2 VR (C)	29	AFM CH-2 VR (G)	303-29A, 402-29A, 502-25A, 806-14
303-30B, 402-30B, 502-26B, 806-13	AFM CH-1 VR (C)	30	AFM CH-1 VR (G)	303-30A, 402-30A, 502-26A, 806-12
	N.C	31	N.C	
	N.C	32	N.C	

201-1B, 401-3B
403-11
101-3, 201-7B, 401-5B
401-6B, 501-1B
401-7B, 501-2B
401-8B, 501-3B
101-1, 201-9B, 401-9B, 501-4B
201-10B, 401-13B
107-12, 201-11B
107-10, 201-12B
107-8, 201-13B, 401-14B
201-14B, 401-15B, 501-12B
401-16B, 501-13B
201-15B, 401-17B, 501-14B
201-16B, 401-18B, 501-15B
201-17B, 401-19B, 501-16B
401-20B, 501-17B
401-21B, 501-18B
107-3, 201-21B
401-24B, 501-21B
108-12, 201-23B
108-10, 201-24B, 401-25B, 50
108-8, 201-25B, 401-26B, 502
108-6, 201-26B, 502-7B

302-2A, 807-16, 1003-12
302-3A, 807-15, 1003-13
404-3
404-7
401-10B, 501-8B, 601-7
602-7
602-9
807-14
807-12
301-4A, 401-6A, 501-1A, 800-
105-5
106-7
803-15
803-13
803-8
803-6
113-11
800-17
800-15
800-13
800-11
800-9
402-2B
202-9B, 402-3B, 800-7
402-4B
202-10A, 402-5B, 502-8B, 80
202-11B, 402-6B
202-12B, 402-7B
202-13A, 402-8B, 800-2
402-9B, 502-9B
402-10B, 502-10B
104-3, 202-14A, 402-11B, 502-
402-12B, 502-13B
402-13B, 502-14B
402-14B, 502-15B
402-15B, 502-16B
402-16B, 502-17B
402-17B, 502-18B
402-18B, 502-19B
402-19B
202-20B, 402-20B, 502-21B,
202-21B, 402-21B, 502-22B,
402-22B
202-23B, 402-23B
202-24B, 402-24B, 807-2
202-25B, 402-25B, 806-22
202-26B, 402-26B, 806-20
202-27B, 402-27B, 502-23B,
202-28B, 402-28B, 502-24B,
202-29B, 402-29B, 502-25B,
202-30B, 402-30B, 502-26B,
402-31B, 502-31B, 702-10, 9

SS-58

	CN301		
	B		A
201-1B 401-3B	TBC EE/PB OUT	1	BEW SENSOR IN	201-1A 808-7
403-11	EXT GNR ON IN	2	EXT FREEZ ON IN	403-10
101-3, 201-7B 401-5B	VIDEO SW PULSE OUT	3	C ROT	101-2, 201-7A 401-5A
401-6B 501-1B	C0 STB OUT	4	L:RESET OUT	302-18B 401-6A 501-1A 800-1B 807-10
401-7B 501-2B	VID C5 OUT	5	IF SCKO OUT	401-7A 501-2A
401-8B 501-3B	IF SOO OUT	6	IF SIO IN	401-8A 501-3A
101-1, 201-9B 401-9B 501-4B	H:S-VHS OUT	7	VIN SYNC IN	201-9A 401-9A 501-4A
201-10B 401-13B	QASI V0 OUT	8	H:REC STANBY OUT	201-10A
107-12, 201-11B	H:V REC MODE OUT	9	RP MODE CONT OUT	107-11, 201-11A
107-10, 201-12B	H:EP SELECT OUT	10	L:Y REC CURR ON OUT	107-9, 201-12A
	N.C	11	BLACK/S-VIDEO OUT	401-13A 501-11B
107-6, 201-13B 401-14B	PB FSC OO	12	H:A0C OFF OUT	401-14A 501-11A
201-14B 401-15B 501-12B	EE FSC OO	13	EE FSC (0)	201-14A 401-15A 501-12A
401-16B 501-13B	VITC BLANK PULSE OUT	14	VITC DATA OUT	401-16A 501-13A
201-15B 401-17B 501-14B	H:EE COLOR	15	H:VIDEO MUTE OUT	201-15A 401-17A 501-14A
201-16B 401-18B 501-15B	REC C OO	16	REC C (0)	201-16A 401-18A 501-15A
201-17B 401-19B 501-16B	REC Y OO	17	REC Y (0)	201-17A 401-19A 501-16A
401-20B 501-17B	VIDEO EE/PB OUT	18	S-VIDEO/COMPOSITE OUT	201-18A 401-20A 501-17A
401-21B 501-18B	H:SYNC DET IN	19	H:EDIT ON OUT	201-19A 401-21A 501-18A
	N.C	20	PB VITC Y IN	201-20A
107-3, 201-21B	H:FE ON OUT	21	REC PB SYNC IN	107-2, 201-21A
401-24B 501-21B	L:S-DC ON OUT	22	0D PULSE	107-1, 201-22A 401-24A
108-12, 201-23B	H:S-VHS DET IN	23	H:AFM REC CURR ON OUT	108-11, 201-23A
108-10, 201-24B 401-25B 502-5B	PB AFM RF OO	24	PB AFM RF (0)	108-9, 201-24A 401-25A 502-5A
108-8, 201-25B 401-26B 502-6B	REC AFM RF OO	25	REC AFM RF (0)	108-7, 201-25A 401-26A 502-6A
108-6, 201-26B 502-7B	AFM SW PULSE OUT	26	AFM EE/PB OUT	108-5, 201-26A 502-7A
	A GND	27	A GND	
	A GND	28	A GND	
	REG -12V	29	REG -12V	
	REG +5.9V	30	REG +5.9V	
	REG +12V	31	REG +12V	
	B GND	32	B GND	

	CN302		
	B		A
	-30V	1	-30V	
302-2A, 807-1A, 1003-12	F+	2	F+	302-2B, 807-1B, 1003-12
302-3A, 807-1C, 1003-13	F-	3	F-	302-3B, 807-1C, 1003-13
	B GND	4	B GND	
	REG +5V	5	REG +5V	
404-3	RX (+) IN	6	RX (-) IN	404-8
404-7	TX (+) OUT	7	TX (-) OUT	404-2
	EE-PROM R/B	8	EE-PROM CS OUT	
	EE-PROM SCK OUT	9	EE-PROM DI OUT	
	EE-PROM DO IN	10	N.C	
	A GND	11	N.C	
401-10B 501-8B 601-7	REF VIDEO OO IN	12	REF VIDEO (0) IN	401-10A 501-8A 601-8
602-7	EXT TC IN OO IN	13	EXT TC IN (0)	602-8
602-9	TIME CODE OUT OO OUT	14	TIME CODE OUT (0) OUT	602-10
	N.C	15	L:S-DC DET IN	602-11
807-14	L:KY SELECT OUT	16	IF SCK1 OUT	807-13
807-12	IF SI1 IN	17	IF SO1 OUT	807-11
301-4A 401-6A 501-1A 800-1B 807-10	L:RESET OUT	18	L:CASSETTE DOWN	104-2
105-5	CASSETTE IN/REC INHIN	19	H:FULL ERASE ON OUT	
	LOADING ON OUT	20	CASSECON ON OUT	
	LOAD/CASSECON DIR OUT	21	CAM MODE 1 IN	106-8
106-7	CAM MODE 2 IN	22	CAM MODE 3 IN	106-6
803-15	SPEAR I	23	DRUM FG IN	803-14
803-13	DRUM ERR OUT	24	CAPSTAN FG (A) IN	803-11
803-8	CAPSTAN FG (B) IN	25	L:CAP FWD CMD OUT	803-7
803-6	CAPSTAN ERR OUT	26	L:STOP SERVO ON OUT	803-5
113-11	DRUM PG (-) IN	27	DRUM PG (+) IN	113-10
800-17	H:D/A LD OUT	28	H:CAP FWD DET OUT	800-16
800-15	H:REEL.FG DET IN	29	L:RS SELECT OUT	800-14
800-13	SS SI1 IN	30	SS SO1 OUT	800-12
800-11	SS SCK1 OUT	31	L:PINCH ON IN	800-10
800-9	D/A 2 IN	32	D/A 1 IN	800-8

	CN303		
	B		A
	REG -5V IN	1	INPUT VITC Y IN	402-1A 502-4A
402-2B	H:EXT TBC CONT OUT	2	TBC SYNC IN	402-2A
202-9B 402-3B 800-7	H:TBC ON	3	TRANSIENT PULSE OUT	202-9A 800-6
402-4B	TBC SCK OUT	4	L:TBC SELECT OUT	402-4A
202-10A 402-5B 502-8B 800-3	H:LAU MUTE	5	TBC SERIAL OUT	402-5A
202-11B 402-6B	PB Y OO	6	PB Y (0)	202-11A 402-6A
202-12B 402-7B	PB C OO	7	PB C (0)	202-12A 402-7A
202-13A 402-8B 800-2	H:SYNC DELAY ON	8	TC GND	402-8A 502-8A
402-9B 502-9B	TC DATA OUT	9	L:DOLBY-NR ON OUT	402-9A 502-9A
402-10B 502-10B	L:LIMITTER ON OUT	10	H:MORE THAN X2	202-14B 402-10A 502-10A 800-1
104-3, 202-14A 402-11B 502-11B 802-17	L:VHS CASSETTE	11	PB TC IN	402-11A 502-11A
402-12B 502-13B	H:CH-2 EE OUT	12	H:CH-1 EE OUT	402-12A 502-13A
402-13B 502-14B	H:CH-2 BIAS ON OUT	13	H:CH-1 BIAS ON OUT	402-13A 502-14A
402-14B 502-15B	H:AFM MUTE OUT	14	H:AFM DET IN	402-14A 502-15A
402-15B 502-16B	H:CH-2 REC OUT	15	H:CH-1 REC OUT	402-15A 502-16A
402-16B 502-17B	H:CH-2 ERASE ON OUT	16	H:CH-1 ERASE ON OUT	402-16A 502-17A
402-17B 502-18B	H:LAU LINEOUT OUT	17	MASTER OSC ON OUT	402-17A 502-18A
402-18B 502-19B	TC SELECT OUT	18	TC MT OUT	402-18A 502-19A
402-19B	8 FIELD PULSE	19	H:MT LAU SEL	202-19A 402-19A 502-20A 807-8
202-20B 402-20B 502-21B 807-7	MONITOR SEL B	20	MONITOR SEL A	202-20A 402-20A 502-21A 807-6
202-21B 402-21B 502-22B 807-5	MT CH-2 OO	21	MT CH-1 OO	202-21A 402-21A 502-22A 807-4
402-22B	H:SW MASK ON	22	SPARE	202-22A
202-23B 402-23B	PB 135. BURST IN	23	TBC CONT GND	202-23A 402-23A 807-3
202-24B 402-24B 807-2	INT TBC CONT SET UP	24	INT TBC CONT Y	202-24A 402-24A 807-1
202-25B 402-25B 806-22	INT TBC CONT HUE	25	INT TBC CONT C	202-25A 402-25A 806-21
202-26B 402-26B 806-20	INT TBC CONT SC-P IN	26	INT TBC CONT H-P IN	202-26A 402-26A 806-19
202-27B 402-27B 502-23B 806-18	LAU CH-2 VR OO	27	LAU CH-2 VR (0)	202-27A 402-27A 502-23A 806-17
202-28B 402-28B 502-24B 806-16	LAU CH-1 VR OO	28	LAU CH-1 VR (0)	202-28A 402-28A 502-24A
202-29B 402-29B 502-25B 806-15	AFM CH-2 VR OO	29	AFM CH-2 VR (0)	202-29A 402-29A 502-25A 806-14
202-30B 402-30B 502-26B 806-13	AFM CH-1 VR OO	30	AFM CH-1 VR (0)	202-30A 402-30A 502-26A 806-12
402-31B 502-31B 702-10, 901-31B	H:HI-FI INPUT SEL OUT	31	MT.HP GND	402-31A 502-31A 806-3
	N.C	32	N.C	

TBC-30

	CN401		
	B		A
	TBC CONT C IN	1	TBC CONT H-P IN	
	TBC CONT Y IN	2	TBC CONT HUE IN	
201-1B 301-1B	TBC EE/PB IN	3	TBC CONT SC-P IN	
N.C	N.C	4	TBC CONT SET UP IN	
101-3, 201-7B 301-3B	VIDEO SW PULSE IN	5	C ROT IN	102-2, 201-7A 301-3A
301-4B 301-1B	C0 STB	6	L:RESET	301-4A 302-18B 301-1A 800-1B 807-10
301-5B 501-2B	VID C5	7	IF SCKO	301-5A 501-2A
301-6B 501-3B	IF SOO	8	IF SIO	301-6A 501-3A
101-1, 201-9B 301-7B 501-4B	H:S-VHS	9	VIN SYNC	201-9A 301-7A 501-4A
302-12B 501-8B 601-7	REF VIDEO OO IN	10	REF VIDEO (0) IN	302-12A 501-8A 601-8
501-9B	BLACK Y OO OUT	11	BLACK Y (0) OUT	501-9A
501-10B	BLACK C OO OUT	12	BLACK C (0) OUT	501-10A
201-10B 301-8B	QASI V0 IN	13	BLACK/S-VIDEO	301-11A 501-11B
107-8, 201-13B 301-12B	PB FSC OO IN	14	H:A0C OFF	301-12A 501-11A
201-14B 301-13B 501-12B	EE FSC OO	15	EE FSC (0)	201-14A 301-13A 501-12A
301-14B 501-13B	VITC BLANK PULSE	16	VITC DATA	301-14A 401-16A
201-15B 301-15B 501-14B	H:EE COLOR	17	H:VIDEO MUTE	201-15A 301-15A 501-14A
201-16B 301-16B 501-15B	REC C OO	18	REC C (0)	201-16A 301-16A 501-15A
201-17B 301-17B 501-16B	REC Y OO	19	REC Y (0)	201-17A 301-17A 501-16A
301-18B 501-17B	VIDEO EE/PB	20	S-VIDEO/COMPOSITE	201-18A 301-18A 501-17A
301-19B 501-18B	H:SYNC DET	21	H:EDIT ON	201-19A 301-19A 501-18A
501-19B	TBC Y OO OUT	22	TBC Y (0) OUT	501-19A
501-20B	TBC C OO OUT	23	TBC C (0) OUT	501-20A
301-22B 501-21B	L:S-DC IN	24	0D PULSE IN	107-1, 201-22A 301-22A
108-10, 201-24B 301-24B 502-5B	PB AFM RF OO	25	PB AFM RF (0)	108-9, 201-24A 301-24A 502-5A
108-8, 201-25B 301-25B 502-6B	REC AFM RF OO	26	REC AFM RF (0)	108-7, 201-25A 301-25A 502-6A
	A GND	27	A GND	
	A GND	28	A GND	
	REG -12V	29	REG -12V	
	REG +5.9V	30	REG +5.9V	
	REG +12V	31	REG +12V	
	B GND	32	B GND	

VA-148

	CN501		
	B		A
301-4B 401-6B	C0 STB IN	1	L:RESET IN	301-4A 302-18B 401-6A 800-1B 807-10
301-5B 401-7B	VID C5 IN	2	IF SCKO IN	301-5A 401-7A
301-6B 401-8B	IF SOO IN	3	IF SIO OUT	301-6A 401-8A
101-1, 201-9B 301-7B 401-9B	H:S-VHS IN	4	VIN SYNC OUT	201-9A 301-7A 401-9A
601-1	S-C OO IN	5	S-C (0) IN	601-2
601-3	S-Y OO IN	6	S-Y (0) IN	601-4
601-5	COMPOSITE VIDEO OO IN	7	COMPOSITE VIDEO (0) IN	601-6
302-12B 401-10B 601-7	REF VIDEO OO	8	REF VIDEO (0)	302-12A 401-10A 601-8
401-11B	BLACK Y OO IN	9	BLACK Y (0) IN	401-11A
401-12B	BLACK C OO IN	10	BLACK C (0) IN	401-12A
301-11A 401-13A	BLACK/S-VIDEO IN	11	H:A0C OFF IN	301-12A 401-14A
201-14B 301-13B 401-15B	EE FSC OO IN	12	EE FSC (0) IN	201-14A 301-13A 401-15A
301-14B 401-16B	VITC BLANK PULSE IN	13	VITC DATA IN	301-14A 401-16A
201-15B 301-15B 401-17B	H:EE COLOR IN	14	H:VIDEO MUTE IN	201-15A 301-15A 401-17A
201-16B 301-16B 401-18B	REC C OO OUT	15	REC C (0) OUT	201-16A 301-16A 401-18A
201-17B 301-17B 401-19B	REC Y OO OUT	16	REC Y (0) OUT	201-17A 301-17A 401-19A
301-18B 401-20B	VIDEO EE/PB IN	17	S-VIDEO/COMPOSITE IN	201-18A 301-18A 401-20A
301-19B 401-21B	H:SYNC DET OUT	18	H:EDIT ON IN	201-19A 301-19A 401-21A
401-22B	TBC Y OO IN	19	TBC Y (0) IN	401-22A
401-23B	TBC C OO IN	20	TBC C (0) IN	401-23A
301-22B 401-24B	L:S-DC ON IN	21	N.C	
601-9	S-VIDEO C1 OO OUT	22	S-VIDEO C1 (0) OUT	601-10
601-11	S-VIDEO Y1 OO OUT	23	S-VIDEO Y1 (0) OUT	601-12
602-1	S-VIDEO C2 OO OUT	24	S-VIDEO C2 (0) OUT	602-2
602-3	S-VIDEO Y2 OO OUT	25	S-VIDEO Y2 (0) OUT	602-4
602-5	VIDEO OUT OO OUT	26	VIDEO OUT (0) OUT	602-6
	A GND	27	A GND	
	A GND	28	A GND	
	REG -12V	29	REG -12V	
	REG +5.9V	30	REG +5.9V	
	REG +12V	31	REG +12V	
	B GND	32	B GND	

TBC-30

	CN402		
	B		A
	REG -5V	1	INPUT VITC Y	303-1A 502-4A
303-2B	H:EXT TBC CONT IN	2	TBC SYNC OUT	303-2A
202-9B 303-3B 800-7	H:TBC ON IN	3	N.C	
303-4B	TBC SCK IN	4	L:TBC SELECT IN	303-4A
202-10A 303-5B 502-8B 800-3	H:LAU MUTE	5	TBC SERIAL IN	303-5A
202-11B 303-6B	PB Y OO IN	6	PB Y (0) IN	202-11A 303-6A
202-12B 303-7B	PB C OO IN	7	PB C (0) IN	202-12A 303-7A
202-13A 303-8B 800-2	H:SYNC DELAY ON	8	TC GND	303-8A 502-8A
303-9B 502-9B	TC DATA	9	L:DOLBY-NR ON	303-9A 502-9A
303-10B 502-10B	L:LIMITTER ON	10	H:MORE THAN X2	202-14B 303-10A 502-10A 800-1
104-3, 202-14A 303-11B 502-11B 802-17	L:VHS CASSETTE	11	PB TC	303-11A 502-11A
303-12B 502-13B	H:CH-2 EE	12	H:CH-1 EE	303-12A 502-13A
303-13B 502-14B	H:CH-2 BIAS ON	13	H:CH-1 BIAS ON	303-13A 502-14A
303-14B 502-15B	H:AFM MUTE	14	H:AFM DET	303-14A 502-15A
303-15B 502-16B	H:CH-2 REC	15	H:CH-1 REC	303-15A 502-16A
303-16B 502-17B	H:CH-2 ERASE ON	16	H:CH-1 ERASE ON	303-16A 502-17A
303-17B 502-18B	H:LAU LINEOUT	17	MASTER OSC ON	303-17A 502-18A
303-18B 502-19B	TC SELECT	18	TC MT	303-18A 502-19A
303-19B	8 FIELD PULSE	19	H:MT LAU SEL	202-19A 303-19A 502-20A 807-8
202-20B 303-20B 502-21B 807-7	MONITOR SEL B	20	MONITOR SEL A	202-20A 303-20A 502-21A 807-6
202-21B 303-21B 502-22B 807-5	MT CH-2 OO	21	MT CH-1 OO	202-21A 303-21A 502-22A 807-4
303-22B	H:SW MASK ON	22	N.C	
202-23B 303-23B	PB 135. BURST IN	23	TBC CONT GND	202-23A 303-23A 807-3
202-24B 303-24B 807-2	INT TBC CONT SET UP	24	INT TBC CONT Y IN	202-24A 303-24A 807-1
202-25B 303-25B 806-22	INT TBC CONT HUE	25	INT TBC CONT C IN	202-25A 303-25A 806-21
202-26B 303-26B 806-20	INT TBC CONT SC-P IN	26	INT TBC CONT H-P IN	202-26A 303-26A 806-19
202-27B 303-27B 502-23B 806-18	LAU CH-2 VR OO	27	LAU CH-2 VR (0)	202-27A 303-27A 502-23A 806-17
202-28B 303-28B 502-24B 806-16	LAU CH-1 VR OO	28	LAU CH-1 VR (0)	202-28A 303-28A 502-24A
202-29B 303-29B 502-25B 806-15	AFM CH-2 VR OO	29	AFM CH-2 VR (0)	202-29A 303-29A 502-25A 806-14
202-30B 303-30B 502-26B 806-13	AFM CH-1 VR OO	30	AFM CH-1 VR (0)	202-30A 303-30A 502-26A 806-12
303-31B 502-31B 702-10, 901-31B	H:HI-FI INPUT SEL	31	MT.HP GND	303-31A 502-31A 806-3
502-32B 806-2	HP CH-2 OO OUT	32	N.C	

VA-148

	CN502		
	B		A
901-1B	COMPONENT Y OO OUT	1	COMPONENT Y (0) OUT	901-1A
901-2B	COMPONENT C OO OUT	2	COMPONENT C (0) OUT	901-2A
602-12, 901-3B	VIDEO MONI OO OUT	3	VIDEO MONI (0) OUT	603-1, 901-3A
	REG -5V OUT	4	INPUT VITC Y OUT	303-1A 402-1A
108-10, 201-24B 301-24B 401-25B	PB AFM RF OO IN	5	PB AFM RF (0) IN	108-9, 201-24A 301-24A 401-25A
108-8, 201-25B 301-25B 401-26B	REC AFM RF OO OUT	6	REC AFM RF (0) OUT	108-7, 201-25A 301-25A 401-26A
108-6, 201-26B 301-26B	AFM SW PULSE IN	7	AFM EE/PB IN	108-5, 201-26A 301-26A
202-10A 303-5B 402-5B 800-3	H:LAU MUTE IN	8	TC GND	303-8A 402-8A
303-9B 402-9B	TC DATA IN	9	L:DOLBY-NR ON IN	303-9A 402-9A
303-10B 402-10B	L:LIMITTER ON IN	10	H:MORE THAN X2	202-14B 303-10A 402-10A 800-1
104-3, 202-14A 303-11B 402-11B 802-17	L:VHS CASSETTE	11	PB TC OUT	303-11A 402-11A
603-8, 901-10B	AUDIO MONI OO OUT	12	AUDIO MONI (0) OUT	603-9, 901-10A
303-12B 402-12B	H:CH-1 EE IN	13	H:CH-1 EE IN	303-12A 402-12A
303-13B 402-13B	H:CH-2 BIAS ON IN	14	H:CH-1 BIAS ON IN	303-13A 402-13A
303-14B 402-14B	H:AFM MUTE IN	15	H:AFM DET OUT	303-14A 402-14A
303-15B 402-15B	H:CH-2 REC IN	16	H:CH-1 REC IN	303-15A 402-15A
303-16B 402-16B	H:CH-2 ERASE ON IN	17	H:CH-1 ERASE ON IN	303-16A 402-16A
303-17B 402-17B	H:LAU LINEOUT IN	18	MASTER OSC ON IN	303-17A 402-17A
303-18B 402-18B	TC SELECT IN	19	TC MT IN	303-18A 402-18A
603-10, 701-1, 702-1, 901-11B	AUDIO MUTE OUT	20	H:MT LAU SEL IN	202-19A 303-19A 402-19A 807-8
202-20B 303-20B 402-20B 807-7	MONITOR SEL B IN	21	MONITOR SEL A IN	202-20A 303-20A 402-20A 807-6
202-21B 303-21B 402-21B 807-5	MT CH-2 OO OUT	22	MT CH-1 OO OUT	202-21A 303-21A 402-21A 807-4
202-27B 303-27B 402-27B 806-18	LAU CH-2 VR OO IN	23	LAU CH-2 VR (0) IN	202-27A 303-27A 402-27A 806-17
202-28B 303-28B 402-28B 806-16	LAU CH-1 VR OO IN	24	LAU CH-1 VR (0) IN	202-28A 303-28A 402-28A
202-29B 303-29B 402-29B 806-15	AFM CH-2 VR OO IN	25	AFM CH-2 VR (0) IN	202-29A 303-29A 402-29A 806-14
202-30B 303-30B 402-30B 806-13	AFM CH-1 VR OO IN	26	AFM CH-1 VR (0) IN	202-30A 303-30A 402-30A 806-12
702-2, 901-27B	AFM CH-1 OUT OO OUT	27	AFM CH-1 OUT (0) OUT	702-3, 901-27A
702-4, 901-28B	AFM CH-2 OUT OO OUT	28	AFM CH-2 OUT (0) OUT	702-5, 901-28A
702-6, 901-29B	LAU CH-1 OUT OO OUT	29	LAU CH-1 OUT (0) OUT	702-7, 901-29A
702-8, 901-30B	LAU CH-2 OUT OO OUT	30	LAU CH-2 OUT (0) OUT	702-9, 901-30A
303-31B 402-31B 702-10, 901-31B	H:HI-FI INPUT SEL	31	MT.HP GND	303-31A 402-31A 806-3
402-32B 806-2	HP CH-2 OO OUT	32	HP CH-1 OO OUT	806-1

NOTE: ★

	SVO-5800	SVO-5800P
CN1001	MOUNT	NO MOUNT

5V — REG +5V
-5V — REG -5V
12V — REG +12V
-12V — REG -12V
5.9V — REG +5.9V
A GND
B GND
M GND
FRAME GND
-30V
12V-2 — +12V (M)

MB-535 (1/5)

1-653-703-11 (1)
SVO-5800/5800P
SVP-5600/5600P

MB-535 (2/5); MOTHER BOARD

DR-266

	CN800	
1	H:MORE THAN X2 OUT	202-14B, 303-10A, 402-10A, 502-10A
2	H:SYNC DELAY ON OUT	202-13A, 303-8B, 402-8B
3	H:LAU MUTE OUT	202-10A, 303-5B, 402-5B, 502-8B
4	N.C	
5	L:APC GAIN UP	202-10B
6	TRANSIENT PULSE IN	202-9A, 303-3A
7	H:TBC ON OUT	202-9B, 303-3B, 402-3B
8	S/A 1 IN	302-32A
9	S/A 2 IN	302-32B
10	L:PINCH ON OUT	302-31A
11	SS SCK1 OUT	302-31B
12	SS SO1 IN	302-30A
13	SS SI1 OUT	302-30B
14	L:RS SELECT IN	302-29A
15	H:REEL.FWD DET OUT	302-29B
16	H:CAP FWD DET IN	302-28A
17	H:S/A LD IN	302-28B
18	L:RESET IN	301-6A, 302-18B, 401-6A, 501-1A, 807-10

DR-265

	CN803	
1	M GND	
2	M GND	
3	+12V (M)	
4	+12V (M)	
5	L:STOP SERVO ON IN	302-26A
6	CAPSTAN ERR IN	302-26B
7	L:CAP FWD CMD IN	302-25A
8	CAPSTAN FG (B) OUT	302-25B
9	N.C	
10	N.C	
11	CAPSTAN FG (A) OUT	302-24A
12	N.C	
13	DRUM ERR IN	302-24B
14	DRUM FG OUT	302-23A
15	SPEAR 1	302-23B
16	T-BRAKE SOL.ON OUT	106-3
17	T-BRAKE SOL.OFF OUT	106-2
18	T-BRAKE SOL.COM OUT	106-1

PTC-73

(CN611)

	CN106	
1	T-BRAKE SOL.COM	803-18
2	T-BRAKE SOL.OFF	803-17
3	T-BRAKE SOL.ON	803-16
4	CAM LED VCC	801-8
5	A GND	
6	CAM MODE 3	302-22A
7	CAM MODE 2	302-22B
8	CAM MODE 1	302-21A

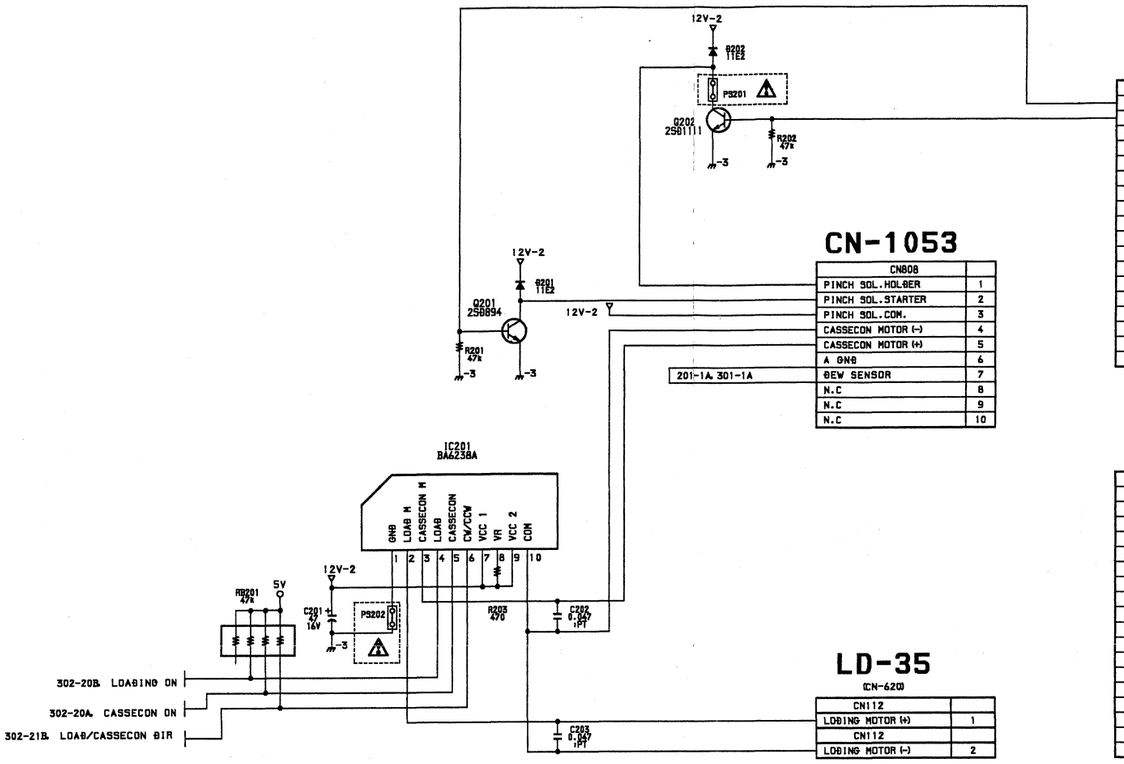

CN-1053

CN808	
PINCH SOL.HOLDER	1
PINCH SOL.STARTER	2
PINCH SOL.COM.	3
CASSECON MOTOR (-)	4
CASSECON MOTOR (+)	5
A GND	6
DEW SENSOR	7
N.C	8
N.C	9
N.C	10

LD-35

(CN-6201)

CN112	
LOADING MOTOR (+)	1
CN112	
LOADING MOTOR (-)	2

DR-266

	CN801	
1	PINCH START OUT	
2	PINCH HOLD OUT	
3	+12V (M)	
4	+12V (M)	
5	M GND	
6	M GND	
7	D GND	
8	CAM LED VCC OUT	106-4
9	L:S-SENSOR IN	123-2
10	S-REEL GND	115-1
11	S-REEL VS OUT	115-3
12	S-REEL CW OUT	115-4
13	S-REEL FG 2 IN	115-5
14	S-REEL FG 1 IN	115-7
15	T-REEL GND	116-1
16	T-REEL VS OUT	116-3
17	T-REEL CW OUT	116-4
18	T-REEL FG 2 IN	116-5

DR-266

	CN802	
1	T-REEL FG 1 IN	116-7
2	CAP FG VCC	114-4, 115-8, 116-8,
3	CAPSTAN CURRENT	805-15
4	N.C	
5	H:MAIN BRAKE ON OUT	805-13
6	CAP FG (B) BIAS OUT	805-12
7	CAP FG (A) BIAS OUT	805-11
8	H:T-REEL BRAKE ON	805-9
9	REG +5V	
10	REG +12V	
11	A GND	
12	REG -12V	
13	TENREG LED VCC	105-4
14	CDS VCC OUT	105-3
15	CDS IN	105-2
16	L:T-SENSOR IN	104-1
17	L:VHS CASSETTE IN	104-3, 202-14A, 303-1
18	TOP/END LED VCC	104-4

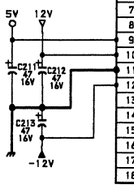

DR-265

	CN804	
1	N.C	
2	U	113-15
3	N.C	
4	N.C	
5	W	113-14
6	V	113-13
7	N.C	
8	U (-)	113-12
9	N.C	
10	HALL BIAS (+)	113-9
11	U (+)	113-8
12	DRUM FG (-)	113-7
13	W (-)	113-6
14	DRUM FG (+)	113-5
15	W (+)	113-4
16	V (-)	113-3
17	HALL BIAS (-)	113-2
18	V (+)	113-1

DR-265

	CN805	
1	BRAKE SOL.ON	105-8
2	BRAKE SOL.OFF	105-7
3	BRAKE SOL.COM.	105-6
4	REG -12V	
5	A GND	
6	REG +12V	
7	REG +5V	
8	CAPSTAN MOTOR GND	114-9
9	H:T-REEL BRAKE ON	802-8
10	L:CAPSTAN FWD OUT	114-8
11	CAP FG (A) BIAS IN	802-7
12	CAP FG (B) BIAS IN	802-6
13	H:MAIN BRAKE ON	802-5
14	CAPSTAN MOTOR DRIVE	114-5
15	CAPSTAN CURRENT	802-3
16	CAP FG VCC	114-4, 115-8, 116-8
17	CAP FG (A)	114-3
18	CAP FG (B)	114-1

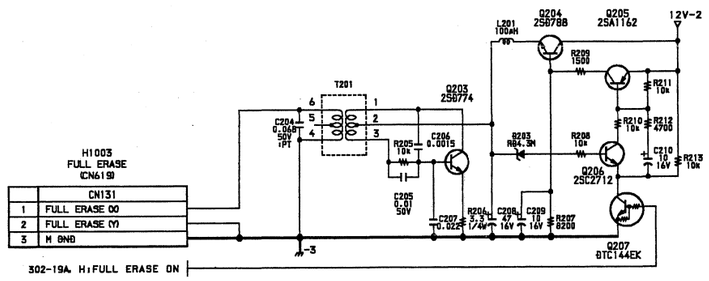

DRUM MOTOR

(CN604)

	CN113	
1	V (+)	804-16
2	HALL BIAS (-)	804-17
3	V (-)	804-16
4	W (+)	804-15
5	DRUM FG (+)	804-14
6	W (-)	804-13
7	DRUM FG (-)	804-12
8	U (+)	804-11
9	HALL BIAS (+)	804-10
10	DRUM PG (+)	302-27A
11	DRUM PG (-)	302-27B
12	U (-)	804-8
13	V	804-6
14	W	804-5
15	U	804-2

CAPSTAN MOTOR

(CN603)

	CN114	
1	CAP FG (B)	805-18
2	A GND	
3	CAP FG (A)	805-17
4	CAP FG VCC	115-8, 116-8, 802-
5	CAPSTAN MOTOR DRIVE	805-14
6	+12V (M)	
7	STAND BY	
8	L:CAPSTAN FWD OUT	805-10
9	CAPSTAN MOTOR GND	805-8

SE-224

(CN610)

	CN123	
1	A GND	
2	L:S-SENSOR	801-9

S-REEL MOTOR

(CN693)

	CN115	
1	S-REEL GND	801-10
2	+12V (M)	
3	S-REEL VS	801-11
4	S-REEL CW	801-12
5	S-REEL FG 2	801-13
6	A GND	
7	S-REEL FG 1	801-14
8	CAP FG VCC	114-4, 116-8, 802-2, 805-16
9	N.C	

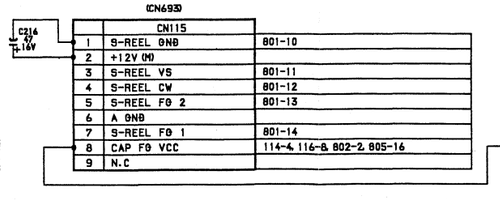

T-REEL MOTOR

(CN683)

	CN116	
1	T-REEL GND	801-15
2	+12V (M)	
3	T-REEL VS	801-16
4	T-REEL CW	801-17
5	T-REEL FG 2	801-18
6	A GND	
7	T-REEL FG 1	802-1
8	CAP FG VCC	114-4, 115-8, 802-
9	N.C	

注意1：⚠印のついた部品は安全性を維持するために重要な部品です。従って交換する時は必ず指定の部品を使って下さい。

NOTE:
The ⚠-marked components are critical to safety.
Replace only with same components as specified.

DR-266

	CN802	
1	T-REEL FG 1 IN	116-7
2	CAP FG VCC	114-4, 115-8, 116-8, 805-16
3	CAPSTAN CURRENT	805-15
4	N.C	
5	H:MAIN BRAKE ON OUT	805-13
6	CAP FG (B) BIAS OUT	805-12
7	CAP FG (A) BIAS OUT	805-11
8	H:T-REEL BRAKE ON	805-9
9	REG +5V	
10	REG +12V	
11	GND	
12	REG -12V	
13	TENREG LEG VCC	105-4
14	CBS VCC OUT	105-3
15	CBS IN	105-2
16	L:T-SENSOR IN	104-1
17	L:VHS CASSETTE IN	104-3, 202-14A, 303-11B, 402-11B, 502-11B
18	TOP/END LEG VCC	104-4

DR-265

	CN805	
1	BRAKE SOL.ON	105-8
2	BRAKE SOL.OFF	105-7
3	BRAKE SOL.COM.	105-6
4	REG -12V	
5	GND	
6	REG +12V	
7	REG +5V	
8	CAPSTAN MOTOR GND	114-9
9	L:T-REEL BRAKE ON	802-8
10	L:CAPSTAN FWD OUT	114-8
11	CAP FG (A) BIAS IN	802-7
12	CAP FG (B) BIAS IN	802-6
13	H:MAIN BRAKE ON	802-5
14	CAPSTAN MOTOR DRIVE	114-5
15	CAPSTAN CURRENT	802-3
16	CAP FG VCC	114-4, 115-8, 116-8, 802-2
17	CAP FG (A)	114-3
18	CAP FG (B)	114-1

CAPSTAN MOTOR

(CN603)

	CN114	
1	CAP FG (B)	805-18
2	GND	
3	CAP FG (A)	805-17
4	CAP FG VCC	115-8, 116-8, 802-2, 805-16
5	CAPSTAN MOTOR DRIVE	805-14
6	+12V (M)	
7	STAND BY	
8	L:CAPSTAN FWD OUT	805-10
9	CAPSTAN MOTOR GND	805-8

T-REEL MOTOR

(CN683)

	CN116	
1	T-REEL GND	801-15
2	+12V (M)	
3	T-REEL VS	801-16
4	T-REEL CW	801-17
5	T-REEL FG 2	801-18
6	GND	
7	T-REEL FG 1	802-1
8	CAP FG VCC	114-4, 115-8, 802-2, 805-16
9	N.C	

KY-303

	CN806	
1	HP CH-1 (X) IN	502-32A
2	HP CH-2 (X) IN	402-32B, 502-32B
3	MT.HP GND	303-31A, 402-31A, 502-31A
4	LAU CH-2 IN (G) IN	703-8
5	LAU CH-2 IN (X) IN	703-7
6	LAU CH-1 IN (G) IN	703-6
7	LAU CH-1 IN (X) IN	703-5
8	AFM CH-2 IN (G) IN	703-4
9	AFM CH-2 IN (X) IN	703-3
10	AFM CH-1 IN (G) IN	703-2
11	AFM CH-1 IN (X) IN	703-1
12	AFM CH-1 VR (G) OUT	202-30A, 303-30A, 402-30A, 502-26A
13	AFM CH-1 VR (X) OUT	202-30B, 303-30B, 402-30B, 502-26B
14	AFM CH-2 VR (G) OUT	202-29A, 303-29A, 402-29A, 502-25A
15	AFM CH-2 VR (X) OUT	202-29B, 303-29B, 402-29B, 502-25B
16	LAU CH-1 VR (X) OUT	202-28B, 303-28B, 402-28B, 502-24B
17	LAU CH-2 VR (G) OUT	202-27A, 303-27A, 402-27A, 502-23A
18	LAU CH-2 VR (X) OUT	202-27B, 303-27B, 402-27B, 502-23B
19	INT TBC CONT H-P OUT	202-26A, 303-26A, 402-26A, (IC102-13)
20	INT TBC CONT SC-P OUT	202-26B, 303-26B, 402-26B, (IC103-3)
21	INT TBC CONT C OUT	202-25A, 303-25A, 402-25A, (IC102-1)
22	INT TBC CONT HUE OUT	202-25B, 303-25B, 402-25B, (IC103-13)

LAU CH-1 VR (G) — JW201

KY-303

	CN807	
1	INT TBC CONT Y OUT	202-24A, 303-24A, 402-24A
2	INT TBC CONT SET UPOUT	202-24B, 303-24B, 402-24B
3	TBC CONT GND	202-23A, 303-23A, 402-23A
4	MT CH-1 (X) OUT	202-21A, 303-21A, 402-21A, 502-22A
5	MT CH-2 (X) OUT	202-21B, 303-21B, 402-21B, 502-22B
6	MONITOR SEL A	202-20A, 303-20A, 402-20A, 502-21A
7	MONITOR SEL B	202-20B, 303-20B, 402-20B, 502-21B
8	H:MT LAU SEL OUT	202-19A, 303-19A, 402-19A, 502-20A
9	VIDEO RF ENV IN	202-15B
10	L:RESET IN	301-4A, 302-16B, 401-6A, 501-1A, 800-18
11	IF SDI IN	302-17A
12	IF SII OUT	302-17B
13	IF SCK1 IN	302-16A
14	L:KY SELECT IN	302-16B
15	F-	302-3A, 3B, 1003-13
16	F+	302-2A, 2B, 1003-12
17	-30V	
18	REG +5V	
19	8 GND	
20	REG +12V	
21	REG -12V	
22	A GND	

HN-198

(CN-658)

	CN105	
1	A GND	
2	CBS IN	802-15
3	CBS VCC	802-14
4	TENREG LEG VCC	802-13
5	CASSETTE IN/REC INH	302-19B
6	BRAKE SOL.COM.	805-3
7	BRAKE SOL.OFF	805-2
8	BRAKE SOL.ON	805-1

HN-198

(CN-655)

	CN104	
1	L:T-SENSOR	802-16
2	L:CASSETTE DOWN	302-18A
3	L:VHS CASSETTE IN	202-14A, 303-11B, 402-11B, 502-11B, 802-17
4	TOP/END LEG VCC	802-18
5	A GND	

CP-246

		CN601	
S-C (X) OUT	L101	1 S-C (X) OUT	501-5B
S-C (G) OUT	L102	2 S-C (G) OUT	501-5A
S-Y (X) OUT	L103	3 S-C (X) OUT	501-6B
S-Y (G) OUT	L104	4 S-C (G) OUT	501-6A
COMPOSITE VIDEO (X) IN	L105	5 COMPOSITE VIDEO (X) IN	501-7B
COMPOSITE VIDEO (G) IN	L106	6 COMPOSITE VIDEO (G) IN	501-7A
REF VIDEO (X) OUT	L107	7 REF VIDEO (X) OUT	302-12B, 401-10B, 501-8B
REF VIDEO (G) OUT	L108	8 REF VIDEO (G) OUT	302-12A, 401-10A, 501-8A
S-VIDEO C1 (X) IN	L109	9 S-VIDEO C1 (X) IN	501-22B
S-VIDEO C1 (G) IN	L110	10 S-VIDEO C1 (G) IN	501-22A
S-VIDEO Y1 (X) IN	L111	11 S-VIDEO Y1 (X) IN	501-23B
S-VIDEO Y1 (G) IN	L112	12 S-VIDEO Y1 (G) IN	501-23A

CP-246

		CN602	
S-VIDEO C2 (X) IN	L113	1 S-VIDEO C2 (X) IN	501-24B
S-VIDEO C2 (G) IN	L114	2 S-VIDEO C2 (G) IN	501-24A
S-VIDEO Y2 (X) IN	L115	3 S-VIDEO Y2 (X) IN	501-25B
S-VIDEO Y2 (G) IN	L116	4 S-VIDEO Y2 (G) IN	501-25A
VIDEO OUT (X) IN	L117	5 VIDEO OUT (X) IN	501-26B
VIDEO OUT (G) IN	L118	6 VIDEO OUT (G) IN	501-26A
EXT TC IN (X) OUT	L119	7 EXT TC IN (X) OUT	302-13B
EXT TC IN (G) OUT	L120	8 EXT TC IN (G) OUT	302-13A
TIME CODE OUT (X) IN	L121	9 TIME CODE OUT (X) IN	302-14B
TIME CODE OUT (G) IN	L122	10 TIME CODE OUT (G) IN	302-14A
L:S-DC SET OUT	L123	11 L:S-DC SET OUT	302-15A
VIDEO MONI (X) IN	L124	12 VIDEO MONI (X) IN	502-33B, 901-3B

CP-246

		CN603	
VIDEO MONI (G) IN	L125	1 VIDEO MONI (G) IN	502-3A, 901-3A
Y (X)	L126	2 Y (X)	901-4B
Y (G)	L127	3 Y (G)	901-4A
R-Y (X)	L128	4 R-Y (X)	901-5B
R-Y (G)	L129	5 R-Y (G)	901-5A
B-Y (X)	L130	6 B-Y (X)	901-6B
B-Y (G)	L131	7 B-Y (G)	901-6A
AUDIO MONI (X) IN	L132	8 AUDIO MONI (X) IN	502-12B, 901-10B
AUDIO MONI (G) IN	L133	9 AUDIO MONI (G) IN	502-12A, 901-10A
AUDIO MUTE IN	L134	10 AUDIO MUTE IN	502-20B, 701-1, 702-1, 901-11B

DEC-75

	CN901			
	B		A	
502-1B	COMPONENT Y (X)	1	COMPONENT Y (G)	502-1A
502-2B	COMPONENT C (X)	2	COMPONENT C (G)	502-2A
502-3B, 602-12	VIDEO MONI (X)	3	VIDEO MONI (G)	502-3A, 603-1
603-2	Y (X)	4	Y (G)	603-3
603-4	R-Y (X)	5	R-Y (G)	603-5
603-6	B-Y (X)	6	B-Y (G)	603-7
	N.C	7	N.C	
	N.C	8	N.C	
	N.C	9	N.C	
502-12B, 603-8	AUDIO MONI (X) OUT	10	AUDIO MONI (G) OUT	502-12A, 603-9
502-20B, 603-10, 701-1, 702-1	AUDIO MUTE	11	N.C	
	REG +5.9V	12	REG +5.9V	
	REG +5.9V	13	REG +5.9V	
	REG -12V	14	REG -12V	
	REG -12V	15	REG -12V	
	A GND	16	A GND	
	A GND	17	A GND	
	A GND	18	A GND	
	N.C	19	N.C	
	N.C	20	N.C	
	N.C	21	N.C	
	N.C	22	N.C	
	N.C	23	N.C	
	N.C	24	N.C	
	N.C	25	N.C	
	N.C	26	N.C	
502-27B, 702-2	AFM CH-1 OUT (X)	27	AFM CH-1 OUT (G)	502-27A, 702-3
502-28B, 702-4	AFM CH-2 OUT (X)	28	AFM CH-2 OUT (G)	502-28A, 702-5
502-29B, 702-6	LAU CH-1 OUT (X)	29	LAU CH-1 OUT (G)	502-29A, 702-7
502-30B, 702-8	LAU CH-2 OUT (X)	30	LAU CH-2 OUT (G)	502-30A, 702-9
303-31B, 402-31B, 502-31B, 702-10	H:HI-FI INPUT SEL	31	N.C	
	N.C	32	N.C	

CP-247

	CN701	
1	AUDIO MUTE	502-20B, 603-10, 702-1, 901-11B
2	N.C	
3	REG +12V	
4	REG +12V	
5	REG -12V	
6	REG -12V	
7	A GND	
8	A GND	
9	A GND	
10	A GND	

CP-247

	CN702	
1	AUDIO MUTE IN	502-20B, 603-10, 701-1, 901-11B
2	AFM CH-1 OUT (X) IN	502-27B, 901-27B
3	AFM CH-1 OUT (G) IN	502-27A, 901-27A
4	AFM CH-2 OUT (X) IN	502-28B, 901-28B
5	AFM CH-2 OUT (G) IN	502-28A, 901-28A
6	LAU CH-1 OUT (X) IN	502-29B, 901-29B
7	LAU CH-1 OUT (G) IN	502-29A, 901-29A
8	LAU CH-2 OUT (X) IN	502-30B, 901-30B
9	LAU CH-2 OUT (G) IN	502-30A, 901-30A
10	H:HI-FI INPUT SEL IN	303-31B, 402-31B, 502-31B, 901-31B

CP-247

	CN703	
1	AFM CH-1 IN (X) OUT	806-11
2	AFM CH-1 IN (G) OUT	806-10
3	AFM CH-2 IN (X) OUT	806-9
4	AFM CH-2 IN (G) OUT	806-8
5	LAU CH-1 IN (X) OUT	806-7
6	LAU CH-1 IN (G) OUT	806-6
7	LAU CH-2 IN (X) OUT	806-5
8	LAU CH-2 IN (G) OUT	806-4
9	N.C	
10	N.C	

5V — REG +5V
12V — REG +12V
REG -5V — -5V
REG -12V — -12V
5.9V — REG +5.9V
-30V — -30V
A GND
8 GND
M GND
FRAME GND
12V-2 — +12V (M)

MB-535 (2/5)

1-653-703-11 (1)
SVO-5800/5800P
SVP-5600/5600P

MB-535 (3/5); MOTHER BOARD

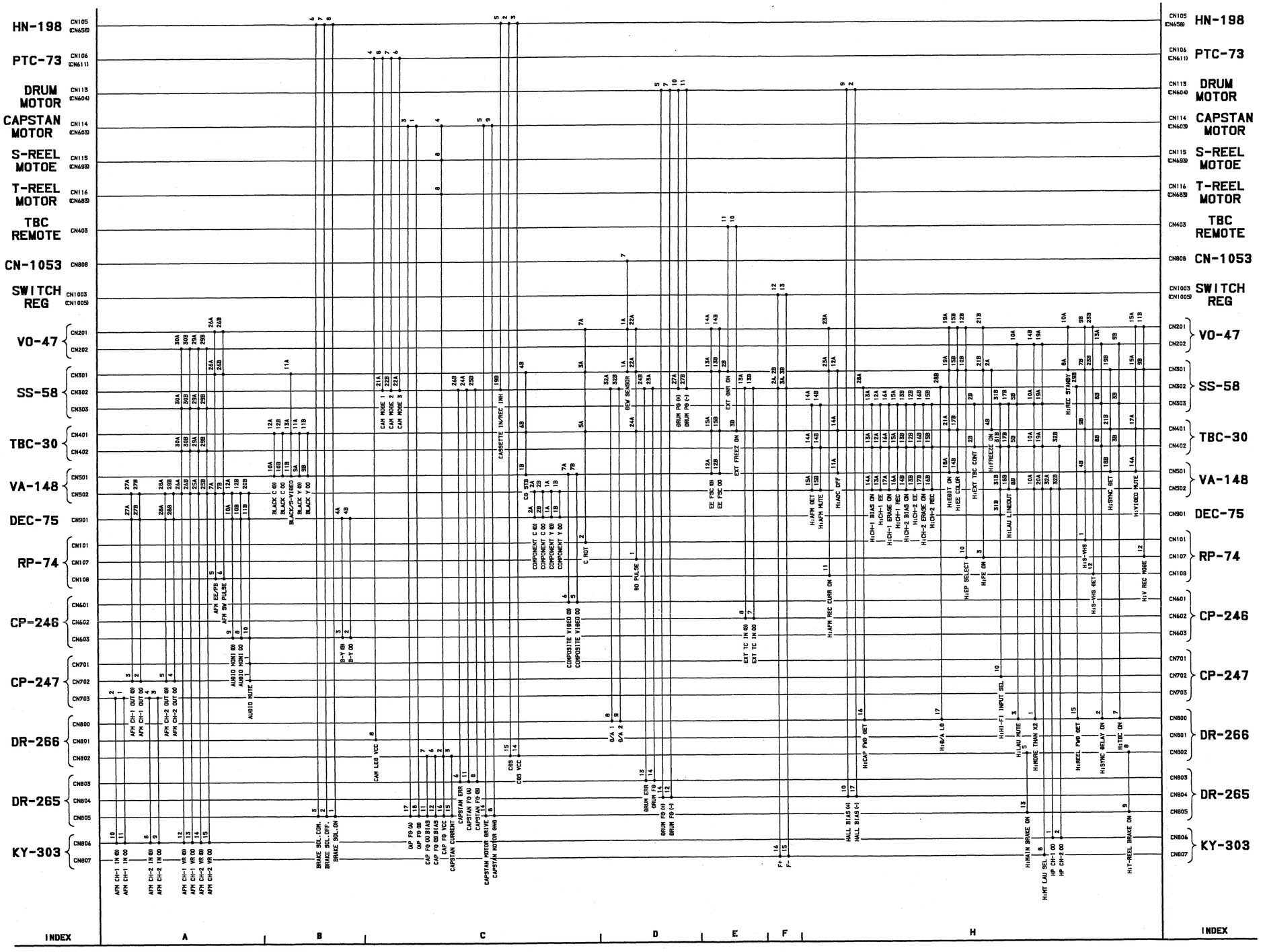

14-69 14-69

A | B | C | D | E | F | G | H

MB-535 (3/5)

1-653-703-11 (1)
SVO-5800/5800P
SVP-5600/5600P

MB-535 (4/5) ; MOTHER BOARD

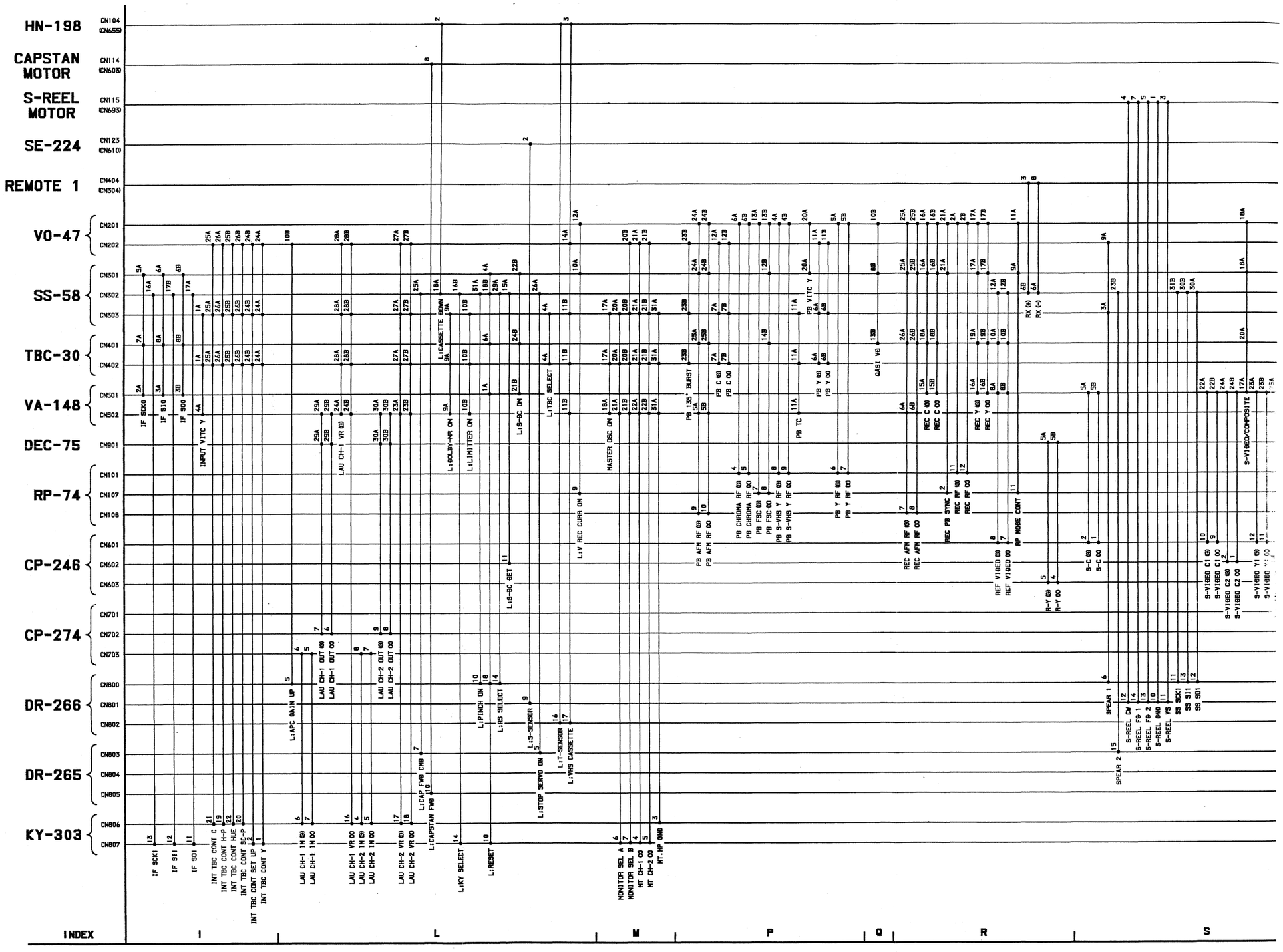

A | B | C | D | E | F | G | H

MB-535 (4/5)

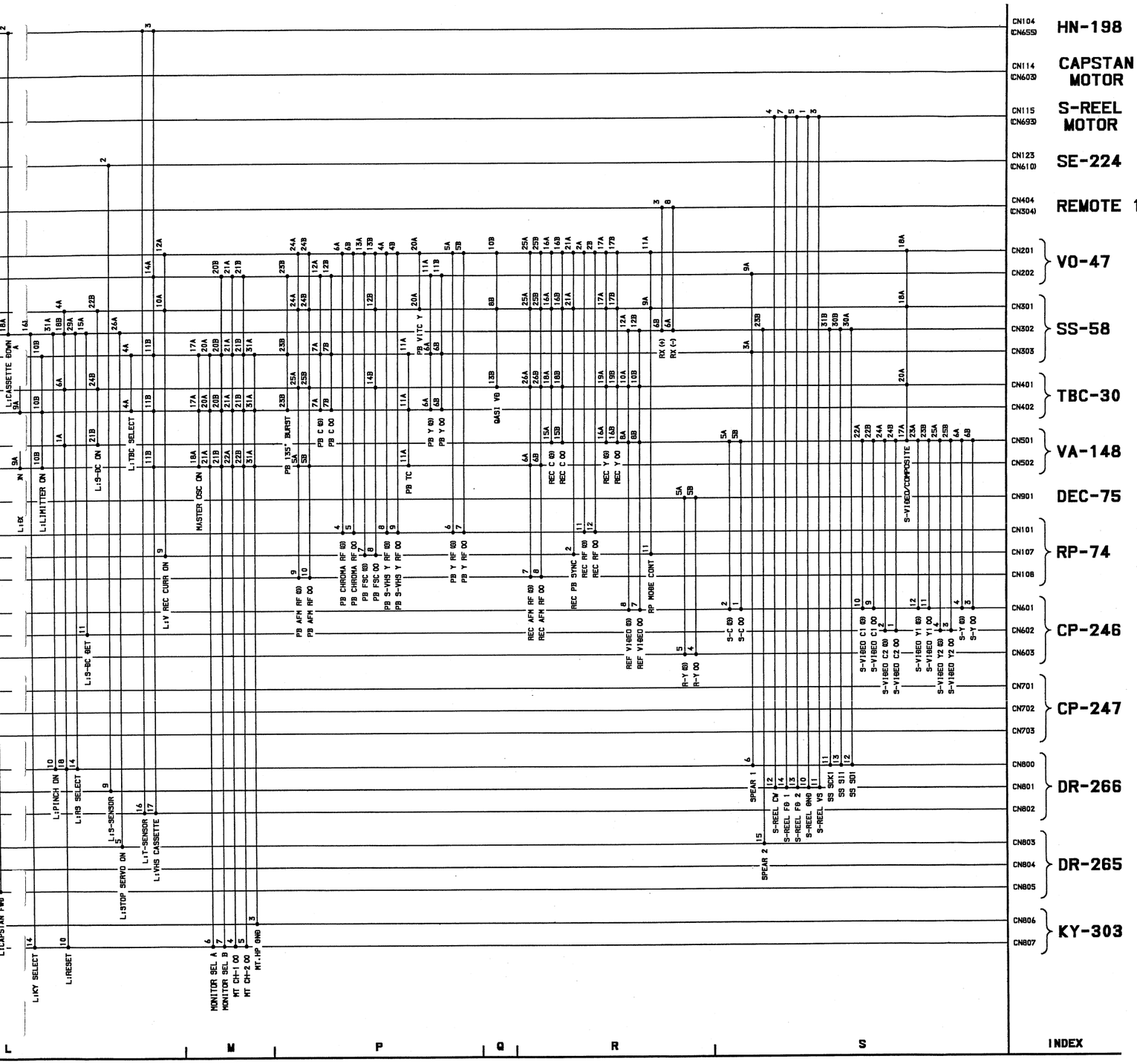

1

2

3

4

5

14-71

MB-535 (4/5)

1-653-703-11 (1)
SVO-5800/5800P
SVP-5600/5600P

E F G H I J K L

MB-535 (5/5) ; MOTHER BOARD

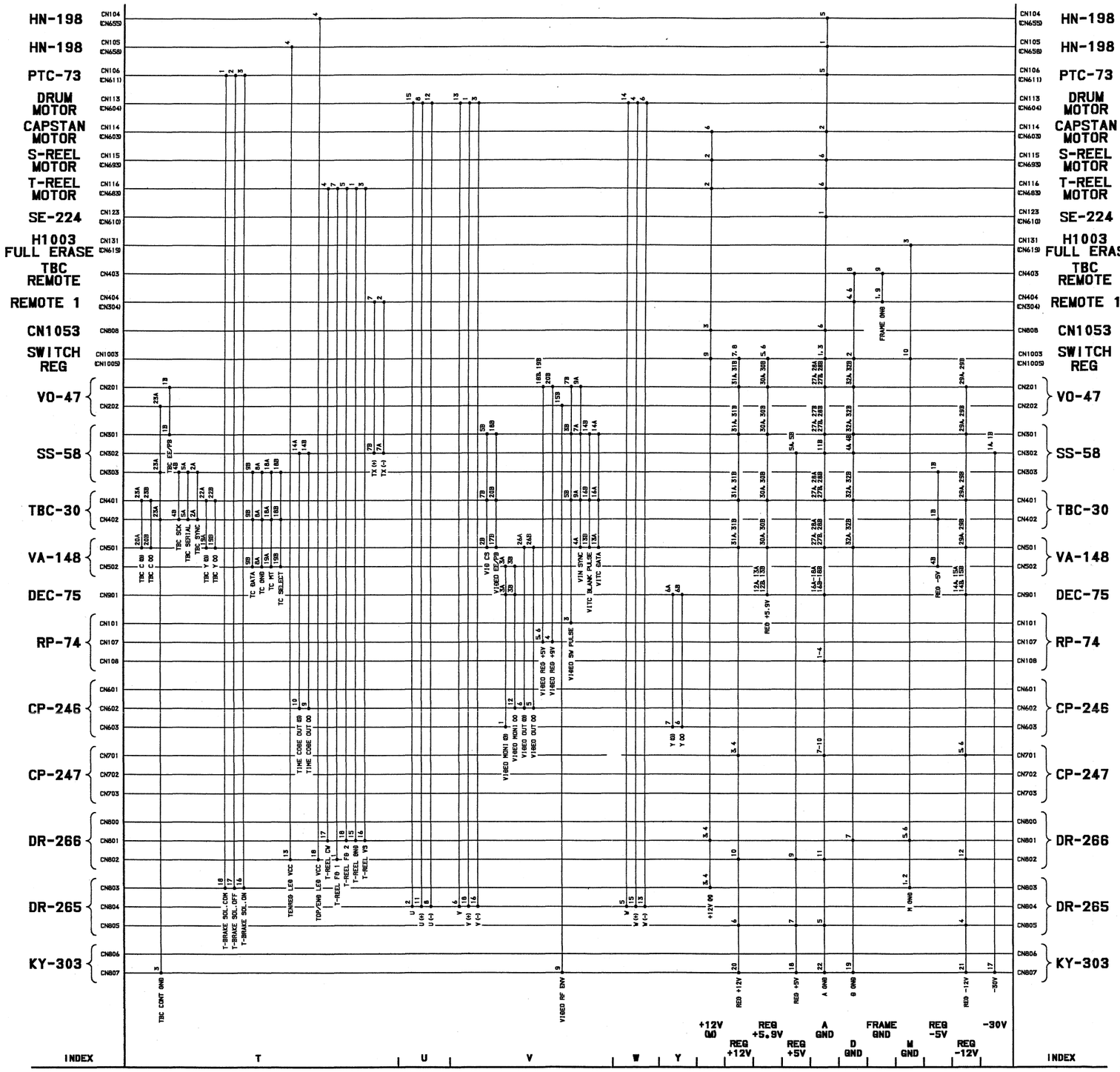

MB-535 (5/5)

1-653-703-11 (1)
SVO-5800/5800P
SVP-5600/5600P

MB-535 (5/5)

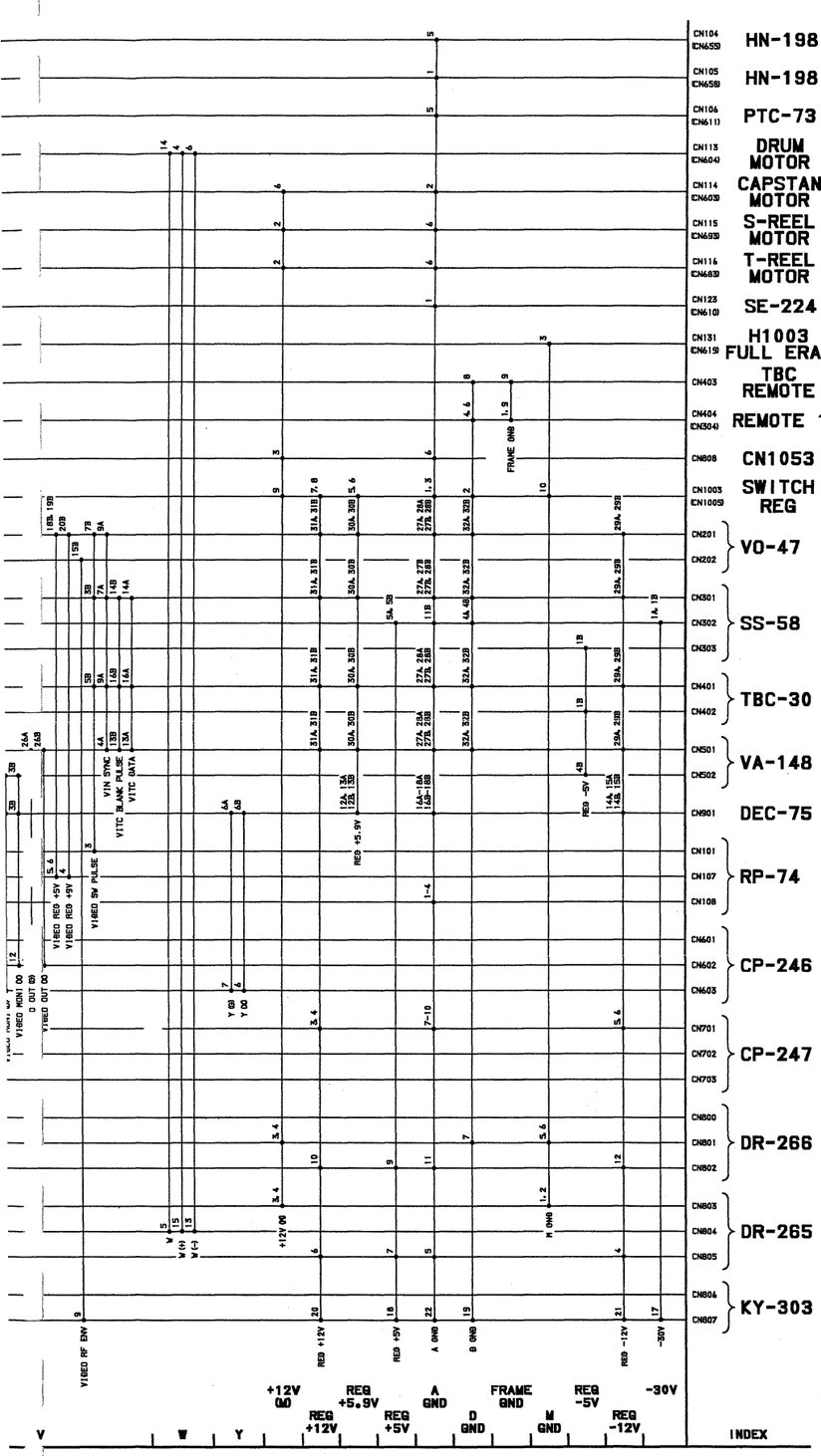

MB-535 (5/5)

1-653-703-11 (1)
SVO-5800/5800P
SVP-5600/5600P

14-73

PTC-73A ; CAM MODE DETECT
CM-14 ; CASSETTE COMPARTMENT MOTOR
CN-1053 ; CONNECTION

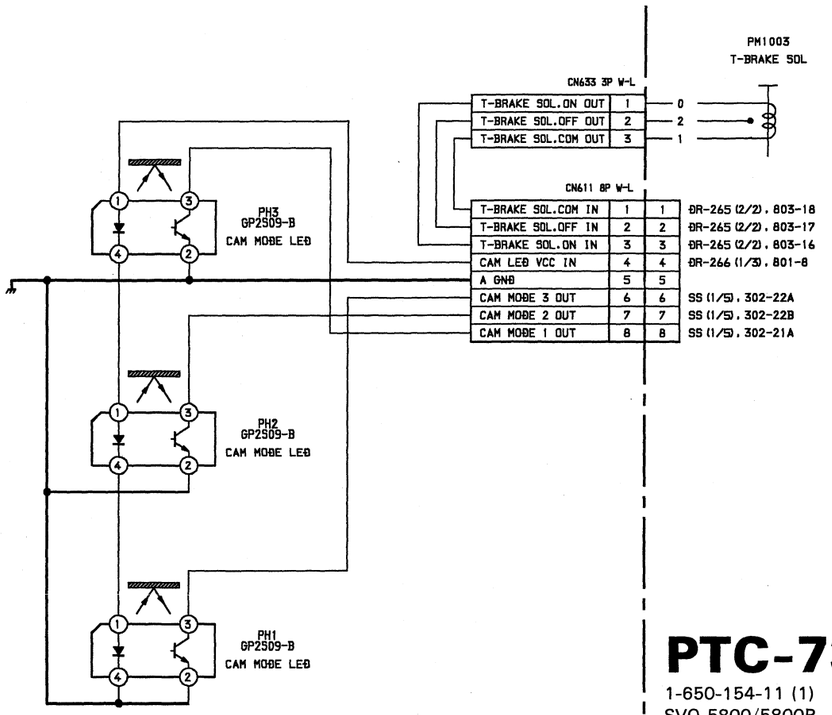

PTC-73A

1-650-154-11 (1)
SVO-5800/5800P
SVP-5600/5600P

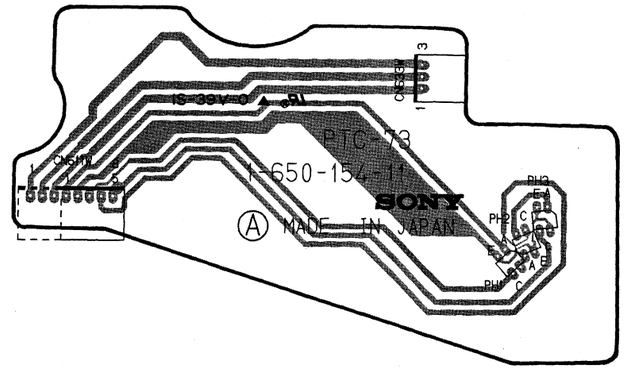

PTC-73A — A SIDE —
1-650-154-11 (1)
SVO-5800/5800P
SVP-5600/5600P

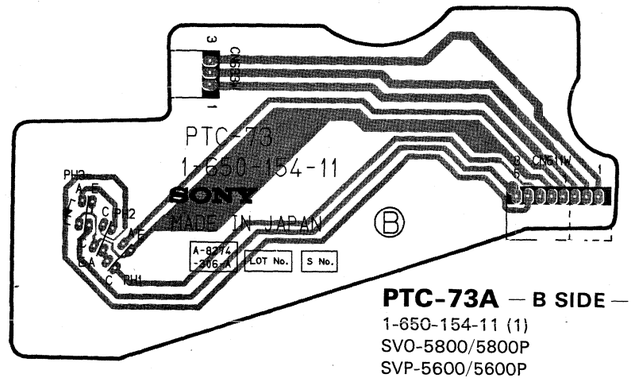

PTC-73A — B SIDE —
1-650-154-11 (1)
SVO-5800/5800P
SVP-5600/5600P

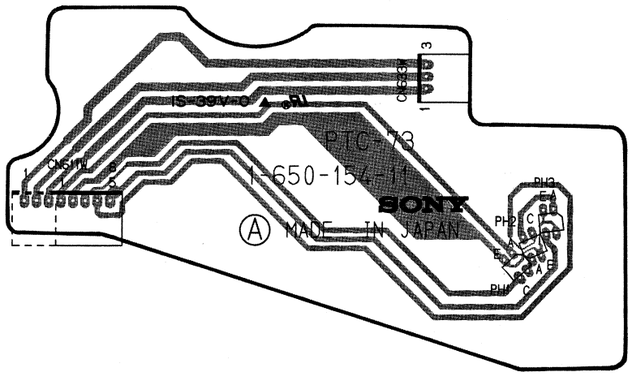

PTC-73A — A SIDE —
1-650-154-11 (1)
SVO-5800/5800P
SVP-5600/5600P

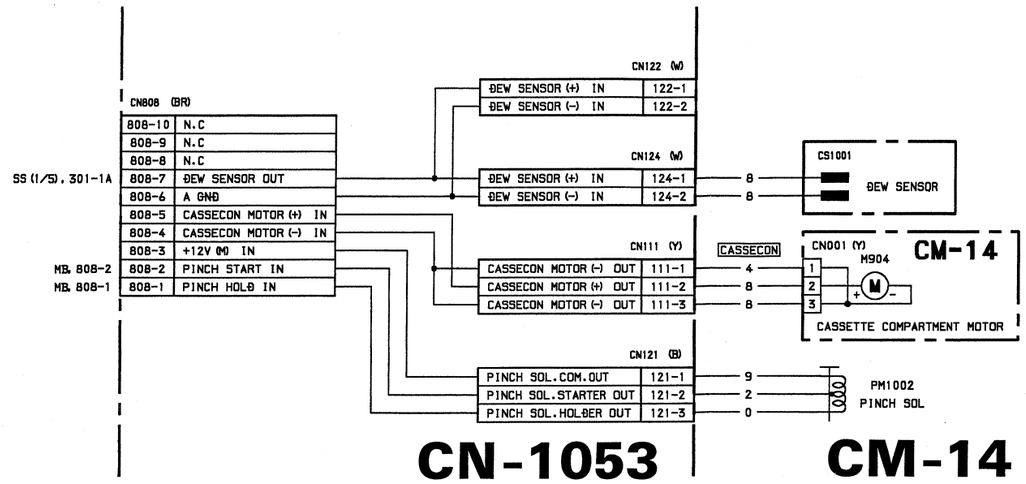

CN-1053
1-653-701-11 (1)
SVO-5800/5800P
SVP-5600/5600P

CM-14
1-630-505-21 (1)
SVO-5800/5800P
SVP-5600/5600P

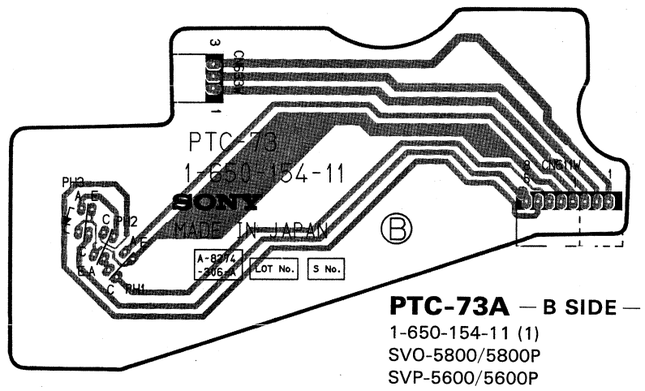

PTC-73A — B SIDE —
1-650-154-11 (1)
SVO-5800/5800P
SVP-5600/5600P

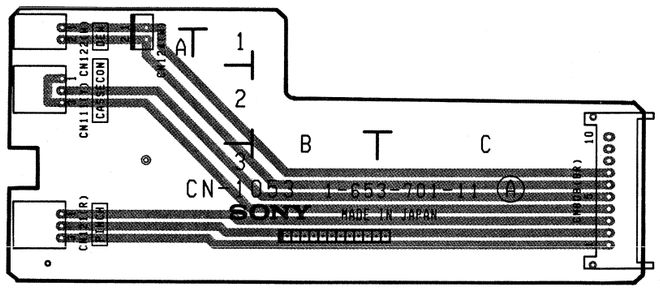

CN-1053 — A SIDE —
1-653-701-11 (1)
SVO-5800/5800P
SVP-5600/5600P

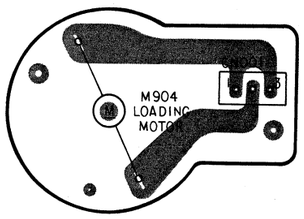

CM-14 — B SIDE —
1-630-505-21 (1)
SVO-5800/5800P
SVP-5600/5600P

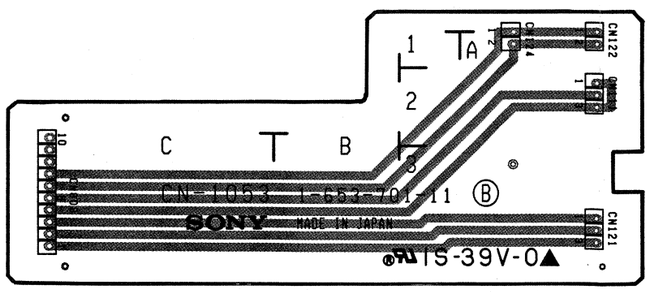

CN-1053 — B SIDE —
1-653-701-11 (1)
SVO-5800/5800P
SVP-5600/5600P

HN-198A ; CONNECTION
LE-131 ; TENSION REGULATOR LED
SE-230 ; TENSION REGULATOR CDS DETECT
SW-668 ; MISS REC SW
SW-673 ; S-VHS CASSETTE SW

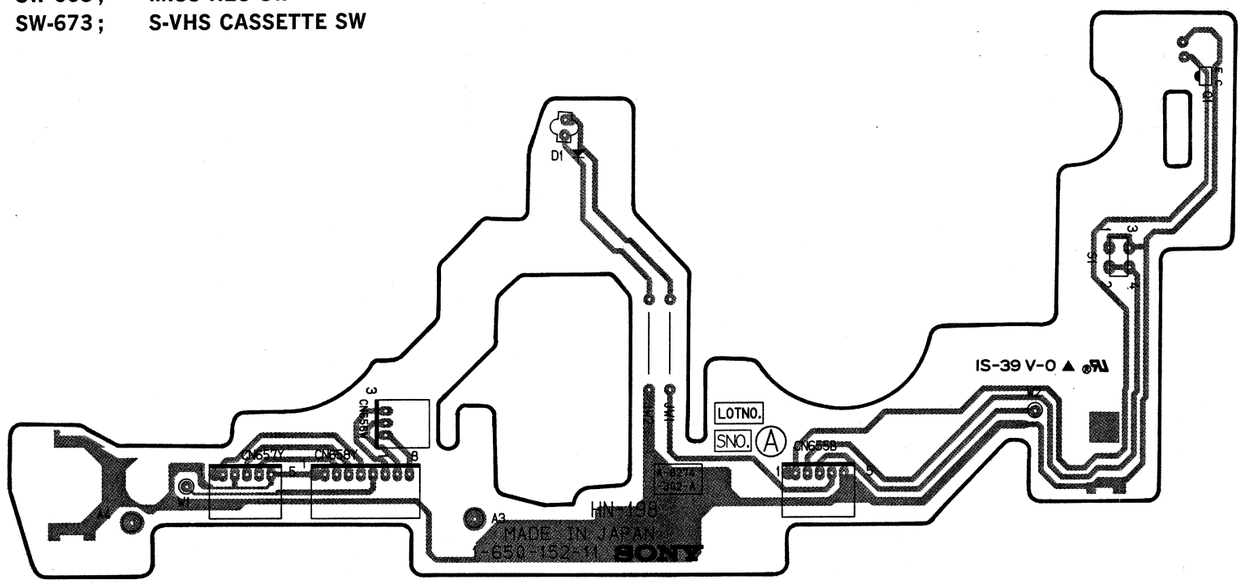

HN-198A — A SIDE —
1-650-152-11 (1)
SVO-5800/5800P
SVP-5600/5600P

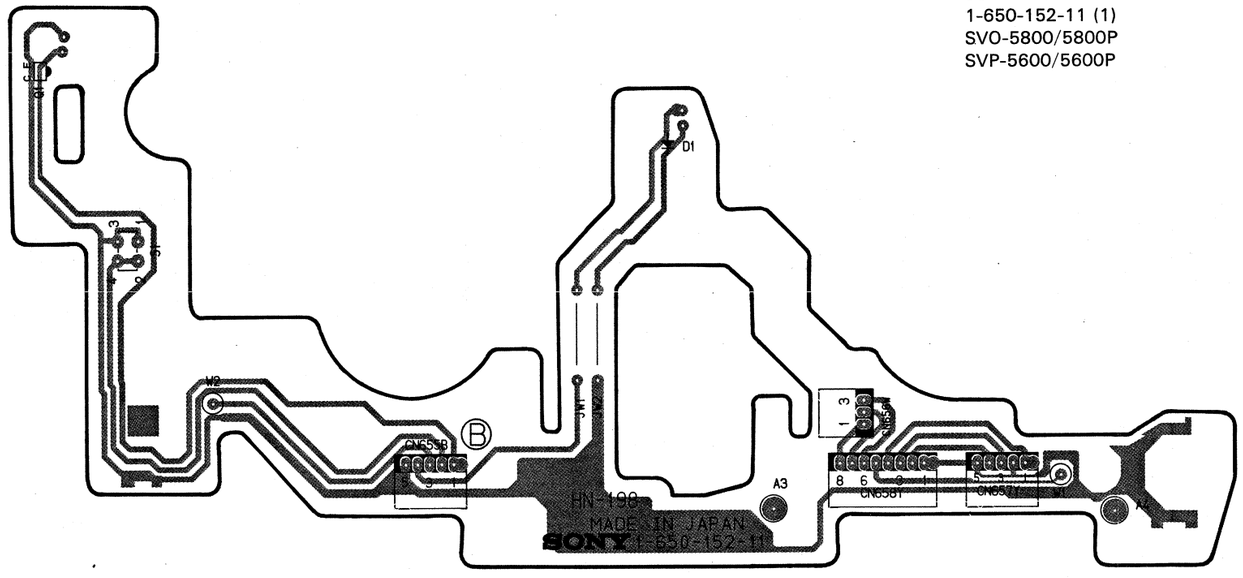

HN-198A — B SIDE —
1-650-152-11 (1)
SVO-5800/5800P
SVP-5600/5600P

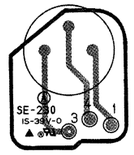

SE-230 — A SIDE —
1-650-347-11 (1)
SVO-5800/5800P
SVP-5600/5600P

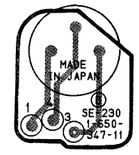

SE-230 — B SIDE —
1-650-347-11 (1)
SVO-5800/5800P
SVP-5600/5600P

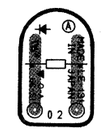

LE-131 — A SIDE —
1-650-346-11
SVO-5800/5800P
SVP-5600/5600P

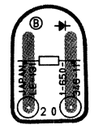

LE-131 — B SIDE —
1-650-346-11 (1)
SVO-5800/5800P
SVP-5600/5600P

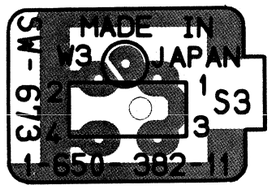

SW-673 — A SIDE —
1-650-382-11 (1)
SVO-5800/5800P
SVP-5600/5600P

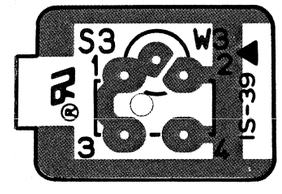

SW-673 — B SIDE —
1-650-382-11 (1)
SVO-5800/5800P
SVP-5600/5600P

SW-668 — A SIDE —
1-650-155-11 (1)
SVO-5800/5800P
SVP-5600/5600P

SW-668 — B SIDE —
1-650-155-11 (1)
SVO-5800/5800P
SVP-5600/5600P

LE-131

1-650-346-11 (1)
SVO-5800/5800P
SVP-5600/5600P

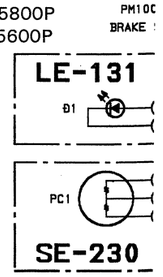

SE-230

1-650-347-11 (1)
SVO-5800/5800P
SVP-5600/5600P

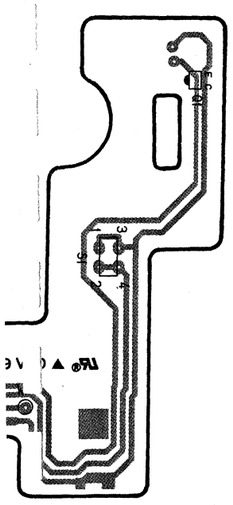

198A — A SIDE —
-1 -11 (1)
8(/5800P
600/5600P

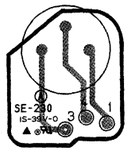

SE-230 — A SIDE —
1-650-347-11 (1)
SVO-5800/5800P
SVP-5600/5600P

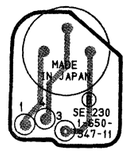

SE-230 — B SIDE —
1-650-347-11 (1)
SVO-5800/5800P
SVP-5600/5600P

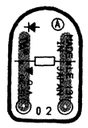

LE-131 — A SIDE —
1-650-346-11
SVO-5800/5800P
SVP-5600/5600P

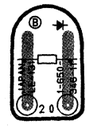

LE-131 — B SIDE —
1-650-346-11 (1)
SVO-5800/5800P
SVP-5600/5600P

LE-131

1-650-346-11 (1)
SVO-5800/5800P
SVP-5600/5600P

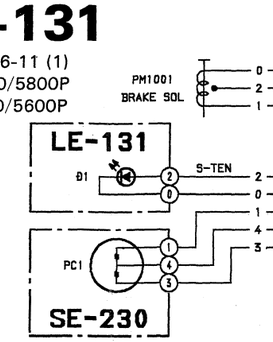

SE-230

1-650-347-11 (1)
SVO-5800/5800P
SVP-5600/5600P

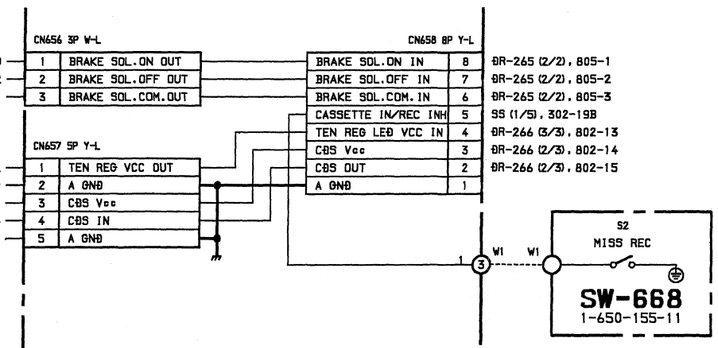

SW-668

1-650-155-11 (1)
SVO-5800/5800P
SVP-5600/5600P

SW-673

1-650-382-11 (1)
SVO-5800/5800P
SVP-5600/5600P

HN-198A

1-650-152-11 (1)
SVO-5800/5800P
SVP-5600/5600P

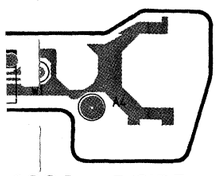

198A — B SIDE —
-15?-11 (1)
8(/5800P
60 /5600P

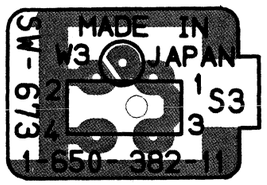

SW-673 — A SIDE —
1-650-382-11 (1)
SVO-5800/5800P
SVP-5600/5600P

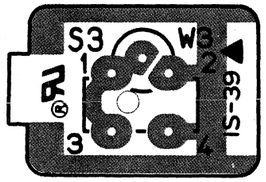

SW-673 — B SIDE —
1-650-382-11 (1)
SVO-5800/5800P
SVP-5600/5600P

SW-668 — A SIDE —
1-650-155-11 (1)
SVO-5800/5800P
SVP-5600/5600P

SW-668 — B SIDE —
1-650-155-11 (1)
SVO-5800/5800P
SVP-5600/5600P

LD-35 ; LOADING MOTOR
SE-224 ; TAPE END SENSOR

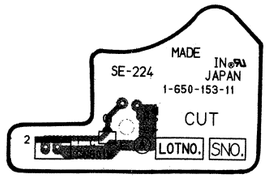

SE-224 — A SIDE —
1-650-153-11 (1)
SVO-5800/5800P
SVP-5600/5600P

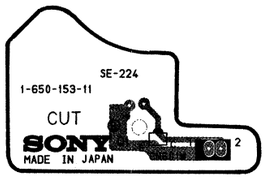

SE-224 — B SIDE —
1-650-153-11 (1)
SVO-5800/5800P
SVP-5600/5600P

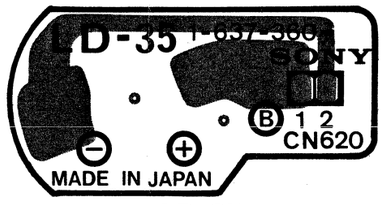

LD-35 — B SIDE —
1-637-360-13 (1)
SVO-5800/5800P
SVP-5600/5600P

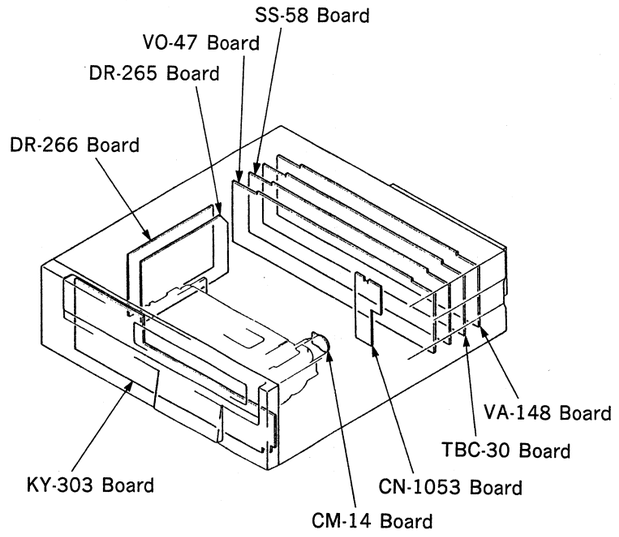

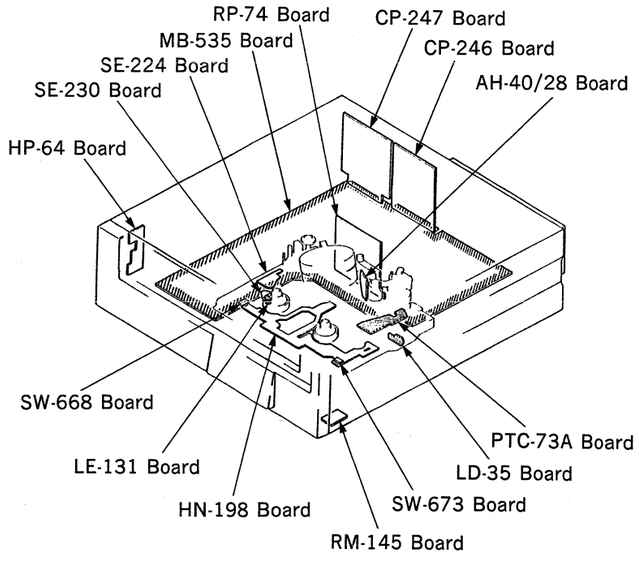

FRAME (1/2)

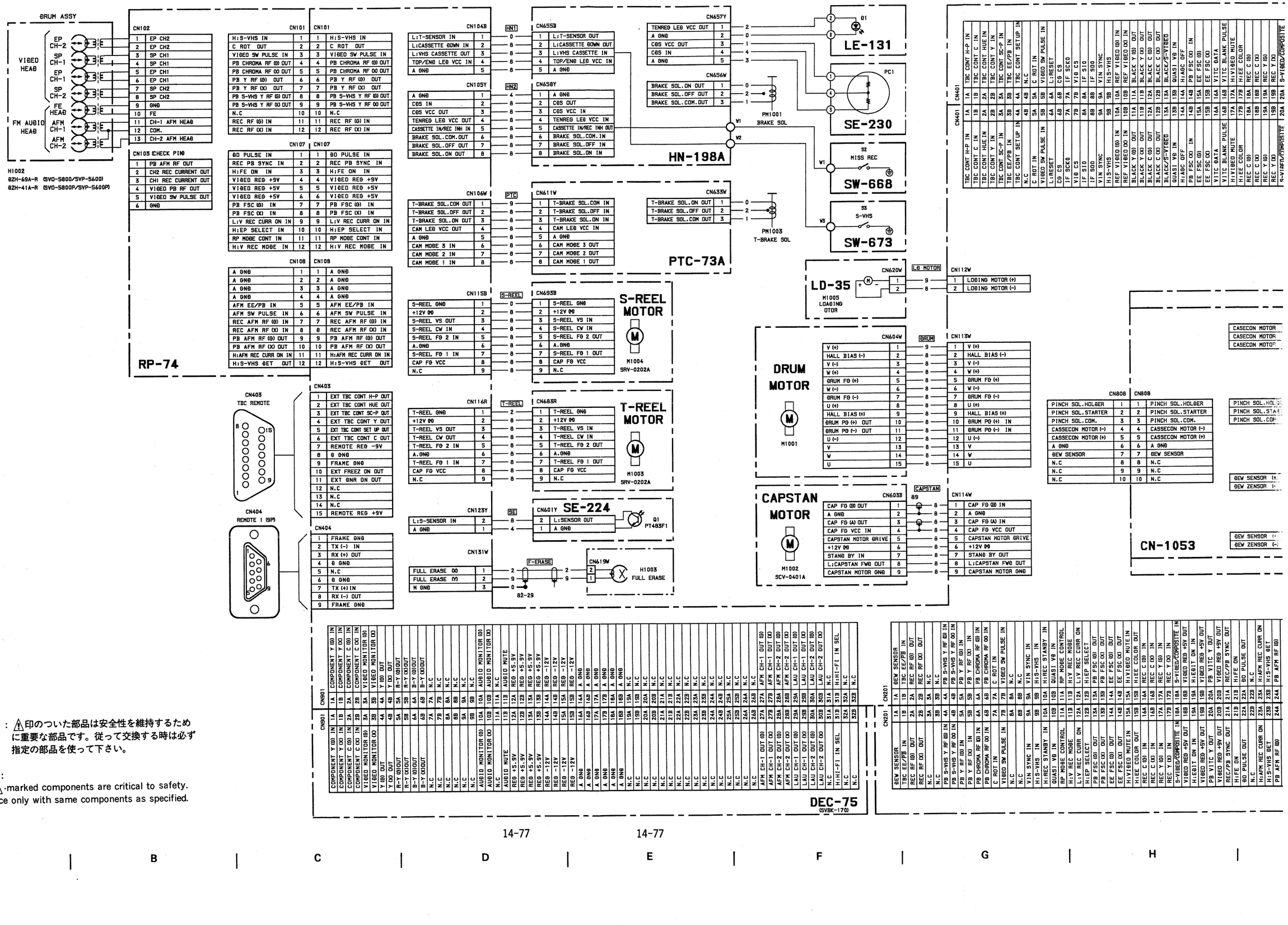

注意1：⚠印のついた部品は安全性を維持するために重要な部品です。従って交換する時は必ず指定の部品を使って下さい。

NOTE:
The ⚠-marked components are critical to safety.
Replace only with same components as specified.

14-77 14-77

A | B | C | D | E | F | G | H

FRAME (1/2), LD-35, SE-224

TBC-30

| | | |

AH-40 ; AUDIO/ERASE/CTL HEAD
AH-28 ; AUDIO/CTL HEAD

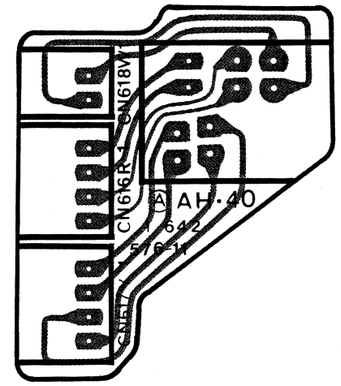

AH-40 — A SIDE —
1-642-576-11 (1)
SVO-5800/5800P

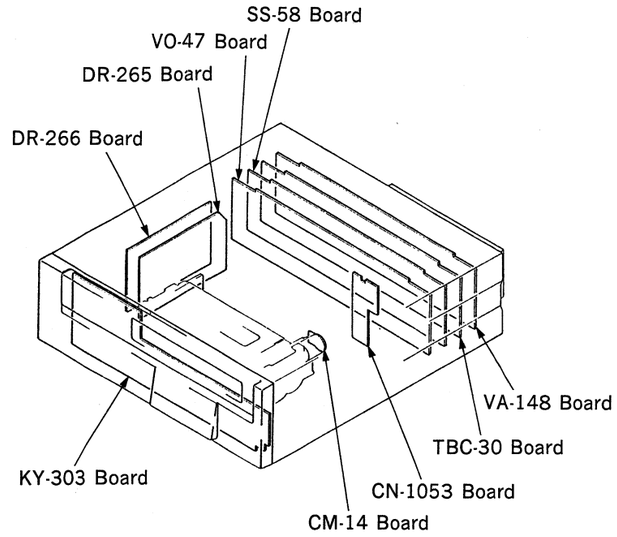

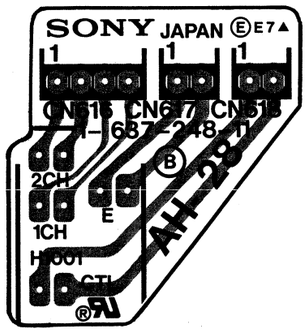

AH-28 — B SIDE —
1-637-248-11 (1)
SVP-5600/5600P

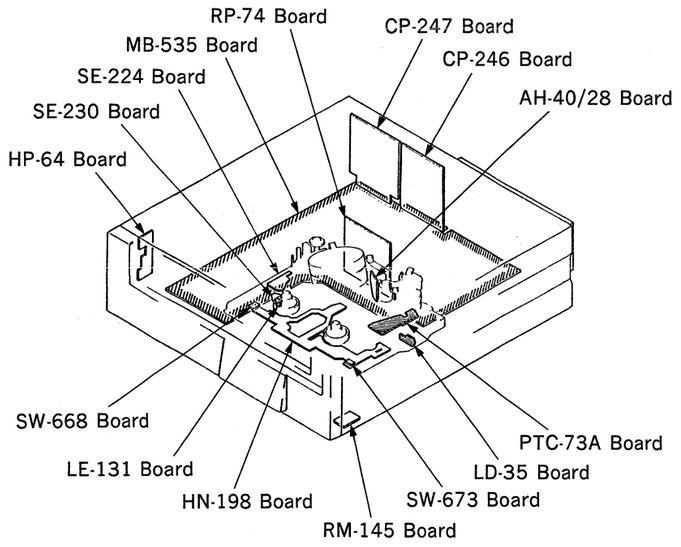

FRAME (2/2), AH-28, AH-40

FRAME (2/2)

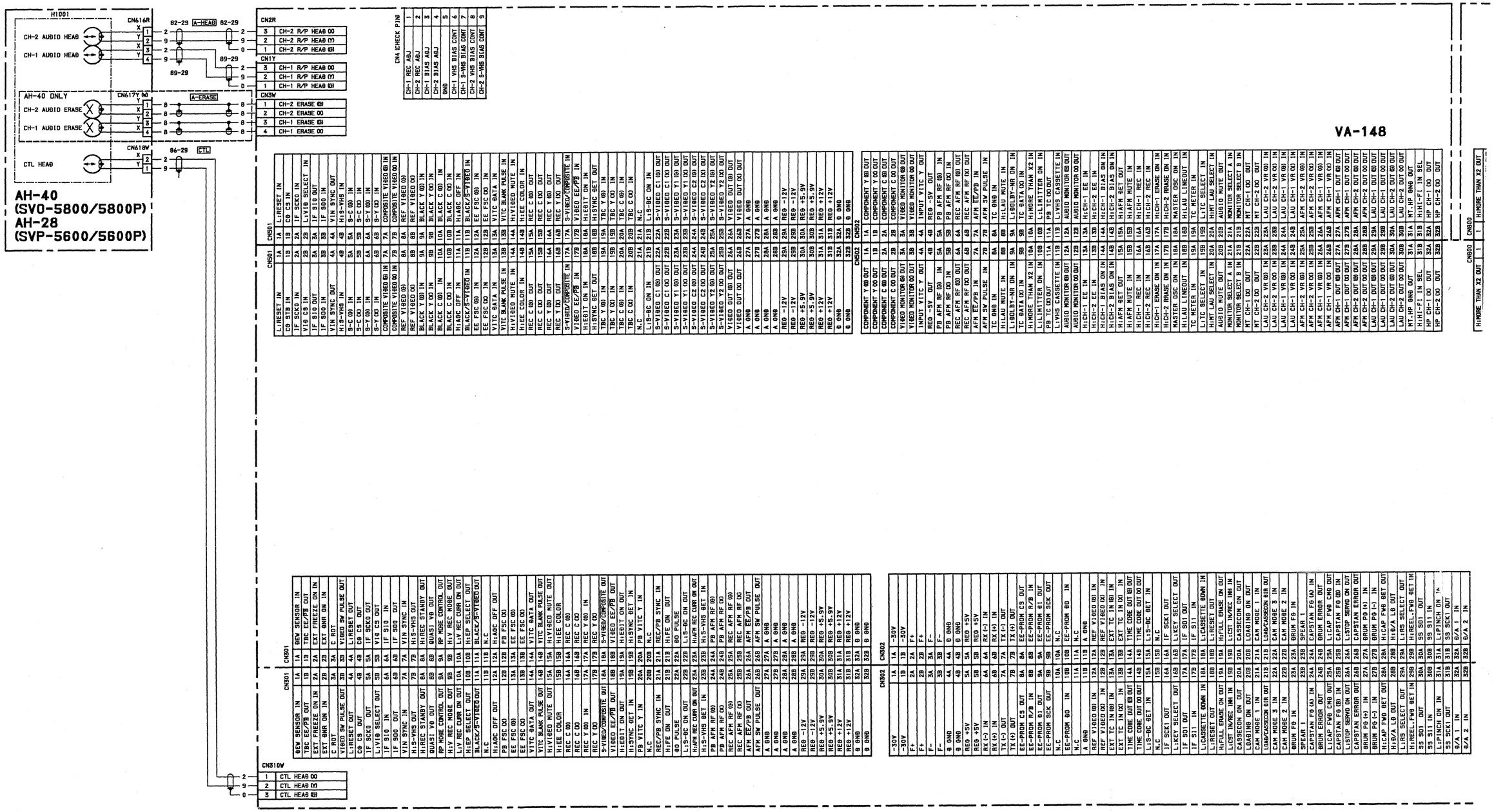

CN2R	
3	CH-2 R/P HEAD 00
2	CH-2 R/P HEAD (Y)
1	CH-2 R/P HEAD (0)

CN1Y	
3	CH-1 R/P HEAD 00
2	CH-1 R/P HEAD (Y)
1	CH-1 R/P HEAD (0)

CN3W	
1	CH-2 ERASE (0)
2	CH-2 ERASE 00
3	CH-1 ERASE (0)
4	CH-1 ERASE 00

CN4 (CHECK PIN)	
CH-1 REC ADJ	1
CH-2 REC ADJ	2
CH-1 BIAS ADJ	3
CH-2 BIAS ADJ	4
GND	5
CH-1 VHS BIAS CONT	6
CH-1 S-VHS BIAS CONT	7
CH-2 VHS BIAS CONT	8
CH-2 S-VHS BIAS CONT	9

CN501					
L.RESET IN	1A	L.RESET IN			
C0 STB IN	1B	C0 C5 IN			
IF SCKO IN	2A	IF SCKO IN			
V10 C5 IN	2B	L.V10 SELECT IN			
IF SIO OUT	3A	IF SIO OUT			
IF SDO IN	3B	IF SDO IN			
V1N SYNC OUT	4A	V1N SYNC OUT			
H:S-VHS IN	4B	H:S-VHS IN			
S-C (0) IN	5A	S-C (0) IN			
S-C (X) IN	5B	S-C (X) IN			
S-Y (0) IN	6A	S-Y (0) IN			
S-Y (X) IN	6B	S-Y (X) IN			
COMPOSITE VIDEO (0) IN	7A	COMPOSITE VIDEO (0) IN			
COMPOSITE VIDEO (X) IN	7B	COMPOSITE VIDEO (X) IN			
REF V1DEO (0)	8A	REF V1DEO (0)			
REF V1DEO (X)	8B	REF V1DEO (X)			
BLACK Y (0) IN	9A	BLACK Y (0) IN			
BLACK Y (X) IN	9B	BLACK Y (X) IN			
BLACK C (0) IN	10A	BLACK C (0) IN			
BLACK C (X) IN	10B	BLACK C (X) IN			
H:AGC OFF IN	11A	H:AGC OFF IN			
BLACK/S-V1DEO IN	11B	BLACK/S-V1DEO IN			
EE F5C (0) IN	12A	EE F5C (0) IN			
EE F5C (X) IN	12B	EE F5C (X) IN			
V1TC DATA IN	13A	V1TC DATA IN			
V1TC BLANK PULSE IN	13B	V1TC BLANK PULSE IN			
H:V1DEO MUTE IN	14A	H:V1DEO MUTE IN			
H:EE COLOR IN	14B	H:EE COLOR IN			
REC C (0) OUT	15A	REC C (0) OUT			
REC C (X) OUT	15B	REC C (X) OUT			
REC Y (0) OUT	16A	REC Y (0) OUT			
REC Y (X) OUT	16B	REC Y (X) OUT			
S-V1DEO/COMPOSITE IN	17A	S-V1DEO/COMPOSITE IN			
V1DEO EE/PB IN	17B	V1DEO EE/PB IN			
H:EDIT ON IN	18A	H:EDIT ON IN			
H:SYNC SET OUT	18B	H:SYNC SET OUT			
TBC Y (0) IN	19A	TBC Y (0) IN			
TBC Y (X) IN	19B	TBC Y (X) IN			
TBC C (0) IN	20A	TBC C (0) IN			
TBC C (X) IN	20B	TBC C (X) IN			
N.C	21A	N.C			
L.I5-AC ON IN	21B	L.I5-AC ON IN			
S-V1DEO C1 (0) OUT	22A	S-V1DEO C1 (0) OUT			
S-V1DEO C1 (X) OUT	22B	S-V1DEO C1 (X) OUT			
S-V1DEO Y1 (0) OUT	23A	S-V1DEO Y1 (0) OUT			
S-V1DEO Y1 (X) OUT	23B	S-V1DEO Y1 (X) OUT			
S-V1DEO C2 (0) OUT	24A	S-V1DEO C2 (0) OUT			
S-V1DEO C2 (X) OUT	24B	S-V1DEO C2 (X) OUT			
S-V1DEO Y2 (0) OUT	25A	S-V1DEO Y2 (0) OUT			
S-V1DEO Y2 (X) OUT	25B	S-V1DEO Y2 (X) OUT			
V1DEO OUT (0) OUT	26A	V1DEO OUT (0) OUT			
V1DEO OUT (X) OUT	26B	V1DEO OUT (X) OUT			
A GND	27A	A GND			
A GND	27B	A GND			
A GND	28A	A GND			
A GND	28B	A GND			
REG -12V	29A	REG -12V			
REG -12V	29B	REG -12V			
REG +5.9V	30A	REG +5.9V			
REG +5.9V	30B	REG +5.9V			
REG +12V	31A	REG +12V			
REG +12V	31B	REG +12V			
B GND	32A	B GND			
B GND	32B	B GND			

CN502					
COMPONENT Y (0) OUT	1A	COMPONENT Y (0) OUT			
COMPONENT Y (X) OUT	1B	COMPONENT Y (X) OUT			
COMPONENT C (0) OUT	2A	COMPONENT C (0) OUT			
COMPONENT C (X) OUT	2B	COMPONENT C (X) OUT			
V1DEO MONITOR (0) OUT	3A	V1DEO MONITOR (0) OUT			
V1DEO MONITOR (X) OUT	3B	V1DEO MONITOR (X) OUT			
INPUT V1TC Y OUT	4A	INPUT V1TC Y OUT			
REG -5V OUT	4B	REG -5V OUT			
P3 A/FM RF (0) IN	5A	P3 A/FM RF (0) IN			
P3 A/FM RF (X) IN	5B	P3 A/FM RF (X) IN			
H:MORE THAN X2 IN	10A	H:MORE THAN X2 IN			
L:LIMITER ON IN	10B	L:LIMITER ON IN			
P3 I/C CASSETTE IN	11A	P3 I/C CASSETTE IN			
L:VHS CASSETTE IN	11B	L:VHS CASSETTE IN			
AUDIO MONITOR (0) OUT	12A	AUDIO MONITOR (0) OUT			
AUDIO MONITOR (X) OUT	12B	AUDIO MONITOR (X) OUT			
H:CH-1 EE IN	13A	H:CH-1 EE IN			
H:CH-2 EE IN	13B	H:CH-2 EE IN			
H:CH-1 BIAS ON IN	14A	H:CH-1 BIAS ON IN			
H:CH-2 BIAS ON IN	14B	H:CH-2 BIAS ON IN			
H:A/FM RF OUT	15A	H:A/FM RF OUT			
H:A/FM MUTE IN	15B	H:A/FM MUTE IN			
H:CH-1 REC IN	16A	H:CH-1 REC IN			
H:CH-2 REC IN	16B	H:CH-2 REC IN			
H:CH-1 ERASE ON IN	17A	H:CH-1 ERASE ON IN			
H:CH-2 ERASE ON IN	17B	H:CH-2 ERASE ON IN			
MASTER OSC ON IN	18A	MASTER OSC ON IN			
H:LAU LINEOUT IN	18B	H:LAU LINEOUT IN			
TC METER IN	19A	TC METER IN			
L:TIC SELECT IN	19B	L:TIC SELECT IN			
H:HI LAU SELECT IN	20A	H:HI LAU SELECT IN			
AUDIO MUTE OUT	20B	AUDIO MUTE OUT			
MONITOR SELECT A IN	21A	MONITOR SELECT A IN			
CASSECON ON OUT	21B	MONITOR SELECT B IN			
LOADING ON OUT	22A	CASSECON ON OUT			
CAM MODE 1 IN	22B	LOADING ON OUT			
LOWCASSECON BIR OUT	23A	CAM MODE 1 IN			
CAM MODE 3 IN	23B	LOWCASSECON BIR OUT			
CAM MODE 2 IN	24A	CAM MODE 3 IN			
BRUM F0 IN	24B	CAM MODE 2 IN			
SPEAR 1	25A	BRUM F0 IN			
CAPSTAN F0 (A) IN	25B	SPEAR 1			
BRUM ERROR OUT	26A	CAPSTAN F0 (A) IN			
L:CAP FWD CHG OUT	26B	BRUM ERROR OUT			
CAPSTAN F0 (B) IN	27A	L:CAP FWD CHG OUT			
L:STOP SERVO ON OUT	27B	CAPSTAN F0 (B) IN			
CAPSTAN ERROR OUT	28A	L:STOP SERVO ON OUT			
BRUM P0 (+) IN	28B	CAPSTAN ERROR OUT			
BRUM P0 (-) IN	29A	BRUM P0 (+) IN			
H:CAP FWD BET OUT	29B	BRUM P0 (-) IN			
H:0/A L0 OUT	30A	H:CAP FWD BET OUT			
L:IN5 SELECT OUT	30B	H:0/A L0 OUT			
H:REEL.FWD BET IN	31A	L:IN5 SELECT OUT			
5S SDI OUT	31B	H:REEL.FWD BET IN			
5S SII IN	32A	5S SDI OUT			
L:PINCH ON IN	32B	5S SII IN			
5S SCKI OUT		5S SCKI OUT			
B/A 1 IN		B/A 1 IN			
B/A 2 IN		B/A 2 IN			

CN310W	
1	CTL HEAD 00
2	CTL HEAD (Y)
3	CTL HEAD (0)

CN800		
H:MORE THAN X2 OUT	1	H:MORE THAN X2 OUT

A | B | C | D | E | F | G | H

FRAME (2/2), AH-28, AH-40

FRAME (2/2), AH-28, AH-40

VA-148

AFM CH-1 VR (0) IN	26A	AFM CH-1 VR (0) IN	26A
AFM CH-1 VR (0) IN	26B	AFM CH-1 VR (0) IN	26B
AFM CH-1 OUT (0) OUT	27A	AFM CH-1 OUT (0) OUT	27A
AFM CH-1 OUT 00 OUT	27B	AFM CH-1 OUT 00 OUT	27B
AFM CH-2 OUT (0) OUT	28A	AFM CH-2 OUT (0) OUT	28A
AFM CH-2 OUT 00 OUT	28B	AFM CH-2 OUT 00 OUT	28B
LAU CH-1 OUT (0) OUT	29A	LAU CH-1 OUT (0) OUT	29A
LAU CH-1 OUT 00 OUT	29B	LAU CH-1 OUT 00 OUT	29B
LAU CH-2 OUT (0) OUT	30A	LAU CH-2 OUT (0) OUT	30A
LAU CH-2 OUT 00 OUT	30B	LAU CH-2 OUT 00 OUT	30B
MT.HP GND OUT	31A	MT.HP GND OUT	31A
H:HI-FI IN SEL	31B	H:HI-FI IN SEL	31B
HP CH-1 IO OUT	32A	HP CH-1 IO OUT	32A
HP CH-2 IO OUT	32B	HP CH-2 IO OUT	32B

CN800

H:MORE THAN X2 OUT	1	H:MORE THAN X2	1
H:SYNC DELAY ON OUT	2	H:SYNC DELAY ON	2
H:LAU MUTE OUT	3	H:LAU MUTE	3
N.C	4	N.C	4
L:APC GAIN UP	5	L:APC GAIN UP	5
TRANSIENT PULSE IN	6	TRANSIENT PULSE	6
H:TBC ON OUT	7	H:TBC ON	7
0/A 1 IN	8	0/A 1 IN	8
0/A 2 IN	9	0/A 2 IN	9
L:PINCH ON OUT	10	L:PINCH ON	10
SS SCK1 OUT	11	SS SCK1	11
SS SDI IN	12	SS SDI	12
SS SII OUT	13	SS SII	13
L:RS SELECT IN	14	L:RS SELECT	14
H:REEL.FWD BET OUT	15	H:REEL.FWD BET	15
H:CAP FWD BET IN	16	H:CAP FWD BET	16
L:RESET IN	17	H:0/A LD IN	17
	18	L:RESET IN	18

CN801

P:INCH START OUT	1	P:INCH START	1
P:INCH HOLD OUT	2	P:INCH HOLD	2
+12V (M)	3	+12V (M)	3
+12V (M)	4	+12V (M)	4
M GND	5	M GND	5
M GND	6	M GND	6
0 GND	7	0 GND	7
CAM LED VCC OUT	8	CAM LED VCC	8
L:S-SENSOR IN	9	L:S-SENSOR	9
S-REEL GND	10	S-REEL GND	10
S-REEL VS OUT	11	S-REEL VS	11
S-REEL CW OUT	12	S-REEL CW	12
S-REEL FG 2 IN	13	S-REEL FG 2	13
S-REEL FG 1 IN	14	S-REEL FG 1	14
T-REEL GND	15	T-REEL GND	15
T-REEL VS OUT	16	T-REEL VS	16
T-REEL CW OUT	17	T-REEL CW	17
T-REEL FG 2 IN	18	T-REEL FG 2	18

CN802

T-REEL FG 1 IN	1	T-REEL FG 1	1
CAP FG VCC	2	CAP FG VCC	2
CAPSTAN CURRENT	3	CAPSTAN CURRENT	3
N.C	4	N.C	4
H:MAIN BRAKE ON OUT	5	H:MAIN BRAKE ON	5
CAP FG (0) BIAS OUT	6	CAP FG (0) BIAS	6
CAP FG (A) BIAS OUT	7	CAP FG (A) BIAS	7
H:T-REEL BRAKE ON	8	H:T-REEL BRAKE	8
REG +5V	9	REG +5V	9
REG +12V	10	REG +12V	10
A GND	11	A GND	11
REG -12V	12	REG -12V	12
TENREG LED VCC	13	TENREG LED	13
CAS VCC OUT	14	CAS VCC	14
CAS IN	15	CAS IN	15
L:T-SENSOR IN	16	L:T-SENSOR	16
L:VHS CASSETTE IN	17	L:VHS CASSETTE	17
TOP/END LED VCC	18	TOP/END LED	18

DR-266

DR-265

CN803

M GND	1	M GND	1
M GND	2	M GND	2
+12V (M)	3	+12V (M)	3
+12V (M)	4	+12V (M)	4
L:STOP SERVO ON IN	5	L:STOP SERVO ON	5
CAPSTAN ERR IN	6	CAPSTAN ERR	6
L:CAP FWD CMD IN	7	L:CAP FWD CMD	7
CAPSTAN FG (0) OUT	8	CAPSTAN FG (0)	8
N.C	9	N.C	9
N.C	10	N.C	10
CAPSTAN FG (A) OUT	11	CAPSTAN FG (A)	11
N.C	12	N.C	12
DRUM ERR IN	13	DRUM ERR	13
DRUM FG OUT	14	DRUM FG	14
SPEAR I	15	SPEAR I	15
T-BRAKE SOL.ON OUT	16	T-BRAKE SOL.ON	16
T-BRAKE SOL.OFF OUT	17	T-BRAKE SOL.OFF	17
T-BRAKE SOL.COM OUT	18	T-BRAKE SOL.COM	18

CN804

N.C	1	N.C	1
U	2	U	2
N.C	3	N.C	3
N.C	4	N.C	4
V	5	V	5
V	6	V	6
N.C	7	N.C	7
U (-)	8	U (-)	8
N.C	9	N.C	9
HALL BIAS (+)	10	HALL BIAS (+)	10
U (+)	11	U (+)	11
DRUM FG (-)	12	DRUM FG (-)	12
V (-)	13	V (-)	13
DRUM FG (+)	14	DRUM FG (+)	14
W (+)	15	W (+)	15
V (-)	16	V (-)	16
HALL BIAS (-)	17	HALL BIAS (-)	17
V (+)	18	V (+)	18

CN805

BRAKE SOL.ON	1	BRAKE SOL.ON	1
BRAKE SOL.OFF	2	BRAKE SOL.OFF	2
BRAKE SOL.COM.	3	BRAKE SOL.COM.	3
REG -12V	4	REG -12V	4
A GND	5	A GND	5
REG +12V	6	REG +12V	6
REG +5V	7	REG +5V	7
CAPSTAN MOTOR GND	8	CAPSTAN MOTOR GND	8
H:T-REEL BRAKE ON	9	H:T-REEL BRAKE ON	9
L:CAPSTAN FWD OUT	10	L:CAPSTAN FWD	10
CAP FG (A) BIAS IN	11	CAP FG (A) BIAS	11
CAP FG (0) BIAS IN	12	CAP FG (0) BIAS	12
H:MAIN BRAKE ON	13	H:MAIN BRAKE	13
CAPSTAN MOTOR DRIVE	14	CAPSTAN MOTOR DRIVE	14
CAPSTAN CURRENT	15	CAPSTAN CURRENT	15
CAP FG VCC	16	CAP FG VCC	16
CAP FG (A)	17	CAP FG (A)	17
CAP FG (0)	18	CAP FG (0)	18

CN701

AUDIO MUTE	1	AUDIO MUTE	1
N.C	2	N.C	2
REG +12V	3	REG +12V	3
REG +12V	4	REG +12V	4
REG -12V	5	REG -12V	5
REG -12V	6	REG -12V	6
A GND	7	A GND	7
A GND	8	A GND	8
A GND	9	A GND	9
A GND	10	A GND	10

CN702

AUDIO MUTE IN	1	AUDIO MUTE IN	1
AFM CH-1 OUT 00 IN	2	AFM CH-1 OUT 00	2
AFM CH-1 OUT (0) IN	3	AFM CH-1 OUT (0)	3
AFM CH-2 OUT 00 IN	4	AFM CH-2 OUT 00	4
AFM CH-2 OUT (0) IN	5	AFM CH-2 OUT (0)	5
LAU CH-1 OUT 00 IN	6	LAU CH-1 OUT 00	6
LAU CH-1 OUT (0) IN	7	LAU CH-1 OUT (0)	7
LAU CH-2 OUT 00 IN	8	LAU CH-2 OUT 00	8
LAU CH-2 OUT (0) IN	9	LAU CH-2 OUT (0)	9
H:HI-FI INPUT SEL IN	10	H:HI-FI INPUT SEL	10

CN703

AFM CH-1 IN 00 OUT	1	AFM CH-1 IN 00	1
AFM CH-1 IN (0) OUT	2	AFM CH-1 IN (0)	2
AFM CH-2 IN 00 OUT	3	AFM CH-2 IN 00	3
AFM CH-2 IN (0) OUT	4	AFM CH-2 IN (0)	4
LAU CH-1 IN 00 OUT	5	LAU CH-1 IN 00	5
LAU CH-1 IN (0) OUT	6	LAU CH-1 IN (0)	6
LAU CH-2 IN 00 OUT	7	LAU CH-2 IN 00	7
LAU CH-2 IN (0) OUT	8	LAU CH-2 IN (0)	8
N.C	9	N.C	9
N.C	10	N.C	10

CN1 (1/2) — CH-1
CN1 (2/2) — CH-2
AUDIO IN (NORM/HI-FI)

CN2 (1/2) — CH-1
CN2 (2/2) — CH-2
AUDIO IN (HI-FI)

CN3 (1/2) — CH-1
CN3 (2/2) — CH-2
AUDIO OUT (NORM/HI-FI)

CN4 (1/2) — CH-1
CN4 (2/2) — CH-2
AUDIO OUT (HI-FI)

CP-247

CN8 (2/2) TIME CODE OUT
CN8 (1/2) TIME CODE IN
CN7 MONITOR AUDIO OUT
CN6 (2/2) MONITOR VIDEO OUT

: SVO-5800/5800P ONLY

MB-535 (2/2)

CN401

S-C 00 OUT	1	S-C 00	1
S-C (0) OUT	2	S-C (0)	2
S-C 00 OUT	3	S-C 00	3
S-C (0) OUT	4	S-C (0)	4
COMPOSITE VIDEO 00 IN	5	COMPOSITE VIDEO 00	5
COMPOSITE VIDEO (0) IN	6	COMPOSITE VIDEO (0)	6
REF VIDEO 00 OUT	7	REF VIDEO 00	7
REF VIDEO (0) OUT	8	REF VIDEO (0)	8
S-VIDEO C1 00 IN	9	S-VIDEO C1 00	9
S-VIDEO C1 (0) IN	10	S-VIDEO C1 (0)	10
S-VIDEO Y1 00 IN	11	S-VIDEO Y1 00	11
S-VIDEO Y1 (0) IN	12	S-VIDEO Y1 (0)	12

CN402

S-VIDEO C2 00 IN	1	S-VIDEO C2 00	1
S-VIDEO C2 (0) IN	2	S-VIDEO C2 (0)	2
S-VIDEO Y2 00 IN	3	S-VIDEO Y2 00	3
S-VIDEO Y2 (0) IN	4	S-VIDEO Y2 (0)	4
VIDEO OUT 00 IN	5	VIDEO OUT 00	5
VIDEO OUT (0) IN	6	VIDEO OUT (0)	6
EXT TC IN 00 OUT	7	EXT TC IN 00	7
EXT TC IN (0) OUT	8	EXT TC IN (0)	8
TIME CODE OUT 00 IN	9	TIME CODE OUT 00	9
TIME CODE OUT (0) IN	10	TIME CODE OUT (0)	10
L:S-BC BET OUT	11	L:S-BC BET OUT	11
VIDEO MONI 00 IN	12	VIDEO MONI 00	12

CN403

VIDEO MONI (0) IN	1	VIDEO MONI (0)	1
Y 00	2	Y 00	2
Y (0)	3	Y (0)	3
R-Y 00	4	R-Y 00	4
R-Y (0)	5	R-Y (0)	5
B-Y 00	6	B-Y 00	6
B-Y (0)	7	B-Y (0)	7
AUDIO MONI 00 IN	8	AUDIO MONI 00	8
AUDIO MONI (0) IN	9	AUDIO MONI (0)	9
AUDIO MUTE IN	10	AUDIO MUTE	10

CP-246

CN1 (1/2) CN1 (2/2) — REF VIDEO IN
CN2 (1/2) CN2 (2/2) — VIDEO IN
CN3 — S-VIDEO IN
CN4 (1/3) Y, CN4 (2/3) R-Y, CN4 (3/3) B-Y — COMPONENT VIDEO OUT
CN5 — S-VIDEO OUT 1
CN10 — S-VIDEO OUT 2
CN6 (1/2) — VIDEO OUT

SS-58

FRAME (2/2)

SVO-5800/5800P (1)
SVP-5600/5600P (1)

14-79

H I J K L M N O P

SECTION 15
SEMICONDUCTOR PIN ASSIGNMENTS

ここに記載されているIC、トランジスタ、ダイオードは、それぞれの機能を等価的に表わしたものです。したがって互換性を表わすものではありません。（互換性のない型名が併記されている事もあります。）部品の交換をする時は、SPARE PARTSの章を参照してください。

ICs, transistors and diodes that functions are equivalent are described here. Therefore, incompatible device names may be described together. For parts replacement, refer to the Spare Parts seciton in this manual.

DIODE PAGE

10E-2 15-3
11E2 15-3

1S2835 15-3
1S2836 15-3
1S2837 15-3
1SS123 15-3
1SS184 15-3
1SS226 15-3

1T362 15-3
1T362A 15-3
1T363 15-3
1T363A 15-3

ERB81-004 15-3
ERC81-004 15-3

GL451V 15-3
GL451VS1 15-3

MA153 15-3

ND411G-2 15-3

RD??FB? 15-3
RD??M 15-3
RD??M-B 15-3
RD??M-B? 15-3

SB05-05CP 15-3

TLG255A 15-3
TLO221 15-3
TLO255A 15-3
TLS255A 15-3

UZM??B 15-3
UZM-30B 15-3

MISCELLANEOUS PAGE

GP-2S09 15-3

TRANSISTOR PAGE

2SA1162 15-4
2SA1162G 15-4
2SA1175 15-4
2SA1226 15-4
2SA812 15-4

2SB1000A 15-4
2SB1142 15-4
2SB1204 15-4
2SB1565 15-4
2SB733-34 15-4
2SB739 15-4

2SC2712 15-4
2SC2715Y 15-4
2SC2785 15-4
2SC3326N 15-4
2SC3735 15-4

2SD1111 15-4
2SD1615A 15-4
2SD774 15-4
2SD774-34 15-4
2SD788 15-4
2SD894 15-4

2SK94 15-4
2SK94-X4 15-4

DTA124EK 15-4
DTA144EK 15-4
DTB114EK 15-4
DTC114TK 15-4
DTC114YK 15-4
DTC144EK 15-4
DTC144ES 15-4
DTC144WK 15-4

FMG2 15-4
FMS1FE 15-4
FMW1 15-4
FMW8 15-4

IMD2 15-4
IMH2 15-4
IMX1 15-4
IMZ1 15-4

PT483F1 15-4
PT483F1S 15-4

IC PAGE

AN3250FAP 15-5
AN3327K 15-6
AN3497SB 15-6

BA6238A 15-7
BR9021B 15-41
BR9021BF 15-7
BX3915A 15-7

CX23065A 15-7
CXA1102M 15-7
CXA1102P 15-7
CXA1106M 15-8
CXA1211M 15-8
CXA1413L 15-8
CXA1727Q 15-8

CXD1132Q 15-9
CXD1175AM 15-10
CXD1176Q 15-10
CXD1216M 15-41
CXD1217M 15-11
CXD1226Q 15-12
CXD1227Q 15-14
CXD2105AQ 15-15
CXD2107M 15-16
CXD2122AQ 15-16
CXD8042Q 15-17
CXD8343AP 15-17
CXD8371M 15-42
CXD8937M 15-18

CXK1206AM 15-18
CXK48324Q 15-19

CXL1506M 15-42
CXL5502M 15-19
CXL5505M 15-42
CXL5509M 15-19

CXP87140 15-20

HA118162NT 15-21
HD14013BP 15-43
HD14053BFP 15-43

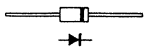

10E-2
11E2

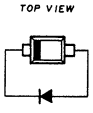

1T362
1T362A
1T363
1T363A

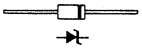

RD ? ?FB ?

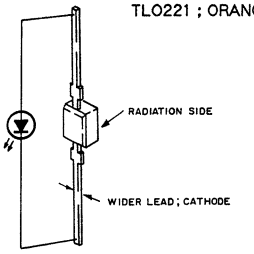

TLO221 ; ORANGE

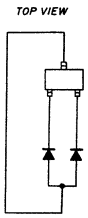

1S2835
1S2836

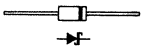

ERB81-004
ERC81-004

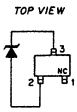

RD ? ?M
RD ? ?M-B
RD ? ?M-B ?
UZM ? ?B
UZM-30B

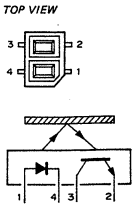

GP-2S09

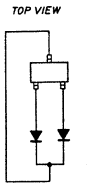

1S2837
1SS184

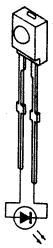

GL451V ; INFRARED
GL451VS1 ; INFRARED

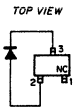

SB05-05CP

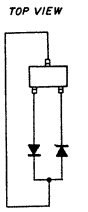

1SS123
1SS226
MA153

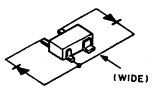

ND411G-2

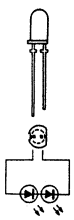

TLG255A ; GREEN
TLO255A ; ORANGE
TLS255A ; RED

AN3250FAP (MATSUSHITA) FLAT PACKAGE

VHS/S-VHS Y SIGNAL REC/PB PROCESSOR

– TOP VIEW –

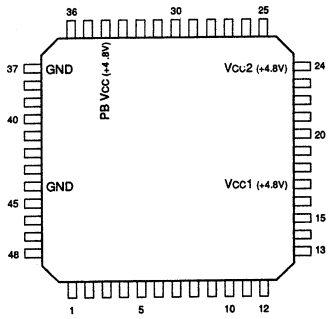

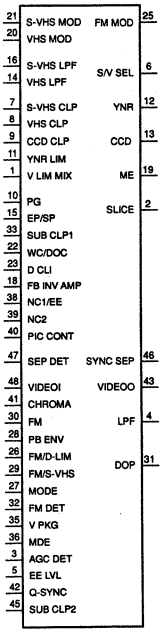

Vcc1 : EXCEPT FM MODULATION BLOCK
Vcc2 : FM MODULATION BLOCK
PB Vcc : PB BLOCK

(Vcc 1.2, PBVcc=+4.8V)

PIN No.	I/O	SIGNAL	PIN No.	I/O	SIGNAL	PIN No.	I/O	SIGNAL
1	I	V LIM MIX	17	—	Vcc1	33	I	SUB CLP1
2	O	SLICE	18	I	FB INV AMP	34	—	PB Vcc
3	I	AGC DET	19	O	ME	35	I	V PKG
4	O	LPF	20	I	VHS MOD	36	I	MDE
5	I	EE LVL	21	I	S-VHS MOD	37	—	GND
6	O	S/V SEL	22	I	WC/DOC	38	I	NC1/EE
7	I	S-VHS CLP	23	I	D CLI	39	I	NC2
8	I	VHS CLP	24	—	Vcc2	40	I	PIC CONT
9	I	CCD CLP	25	O	FM MOD	41	I	CHROMA
10	I	PG	26	I	FM/D-LIM	42	I	Q-SYNC
11	I	YNR LIM	27	I	MODE	43	O	VIDEOO
12	O	YNR	28	I	PB ENV	44	—	GND
13	O	CCD	29	I	FM/S-VHS	45	I	SUB CLP2
14	I	VHS LPF	30	I	FM	46	O	SYNC SEP
15	I	EP/SP	31	O	DOP	47	I	SEP DET
16	I	S-VHS LPF	32	I	FM DET	48	I	VIDEOI

INPUT

AGC DET	; VIDEO AUTO GAIN CONTROL DETECT
CCD CLP	; CCD OUTPUT SIGNAL CLAMP
CHROMA	; CHROMA SIGNAL
D CLI	; DARK CLIP LEVEL ADJUSTMENT
EE LVL	; EE LEVEL ADJUSTMENT
EP/SP	; EP/SP SELECT
FB INV AMP	; FEED BACK AMP INVERT
FM	; FM SIGNAL
FM DET	; FM DEMODULATOR DETECT SENSITIVITY ADJUSTMENT
FM/D-LIM	; S-VHS FM SIGNAL/DATA LIMITER PROHIBITION
FM/S-VHS	; S-VHS FM SIGNAL/S-VHS SELECT
MDE	; MAIN DEEMPHASIS TIME CONSTANT
MODE	; EDIT/DETAIL/NORMAL MODE SELECT
NC1/EE	; NOISE CANCEL TIME CONSTANT 1/EE SELECT
NC2	; NOISE CANCEL TIME CONSTANT 2
PB ENV	; PB FM ENVELOPE DETECT
PG	; PULSE GENERATOR SIGNAL
PIC CONT	; PICTURE CONTROL ADJUSTMENT
Q-SYNC	; QUASI SYNC PULSE
SEP DET	; SYNC SEPARATOR DETECT
SUB CLIP1, 2	; SUB CLAMP TIME CONSTANT1, 2
S-VHS CLP	; S-VHS CLAMP
S-VHS LPF	; S-VHS LPF SIGNAL
S-VHS MOD	; S-VHS FM MODULATOR
V PKG	; VIDEO PEAKING TIME CONSTANT
VHS CLP	; VHS CLAMP
VHS MOD	; VHS FM MODULATOR
VHS LPF	; VHS LPF SIGNAL
VIDEOI	; VIDEO SIGNAL
V LIM MIX	; VIDEO APERTURE LIMITER MIX
WC/DOC	; WHITE CLIP LEVEL ADJUSTMENT/FORCED DROP OUT CONTROL SELECT
YNR LIM	; Y NOISE REDUCE LIMITER

OUTPUT

CCD	; CCD SIGNAL
DOP	; DROP OUT PULSE
FM MOD	; FM MODULATOR
LPF	; Y LPF
ME	; MAIN EMPHASIS
SLICE	; DIFFERENCE SIGNAL SLICE
SYNC SEP	; SYNC SEPARATOR PULSE
S/V SEL	; LPF S-VHS/VHS SELECT
VIDEOO	; VIDEO SIGNAL
YNR	; Y NOISE REDUCE DIFFERENCE COMPONENT

MODE SELECT SETTING TABLE

SIGNAL	HIGH LEVEL	MIDDLE LEVEL	LOW LEVEL
EP/SP (15 pin)	EP	—	SP
WC/DOC (22 pin)	WHITE CLIP	WHITE CLIP	DOC
FM/D-LIM (26 pin)	D-LIM (OPEN)	D-LIM (OPEN)	PROHIBITION
MODE (27 pin)	EDIT	DETAIL	NORMAL
FM/S-VHS (29 pin)	S-VHS (OPEN)	S-VHS (OPEN)	VHS
NC1/EE (38 pin)	EE	VV (OPEN)	VV (OPEN)
Q-SYNC (42 pin)	SYNC CHIP	GRAY	THROUGH
PB Vcc (34 pin)	PB (+4.8V)	—	—

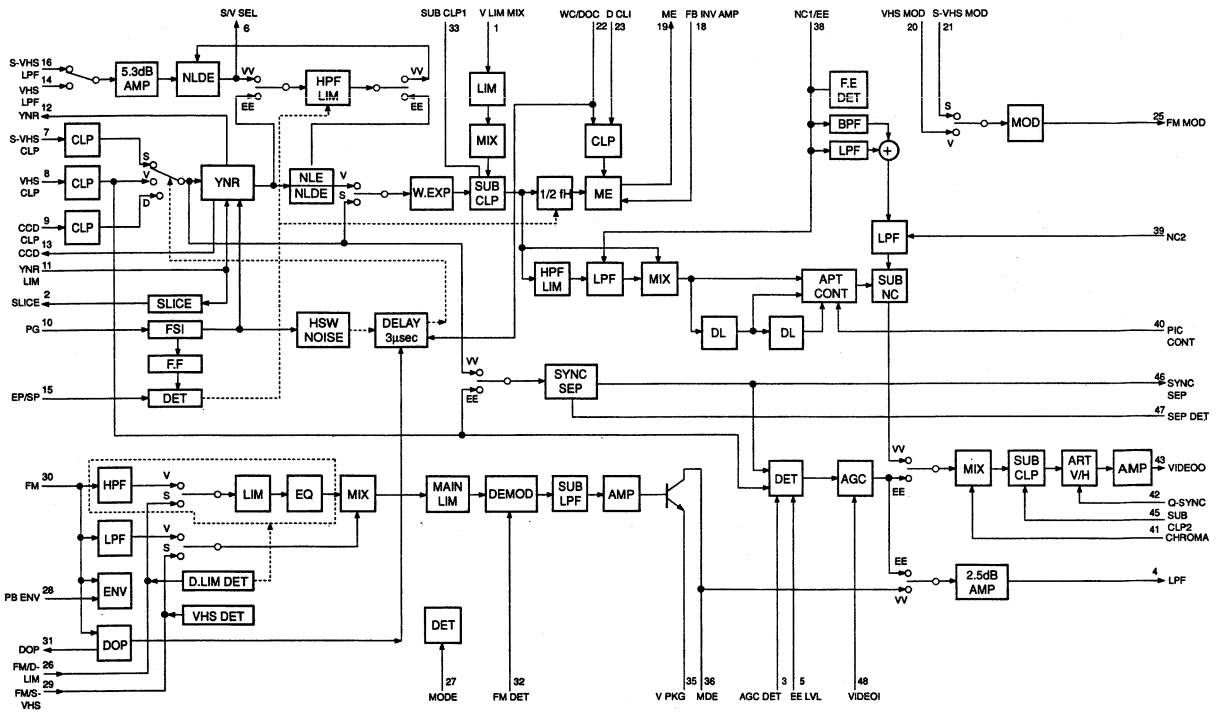

BA6238A (ROHM)

FORWARD AND REVERSE MOTOR DRIVER
– SIDE VIEW –

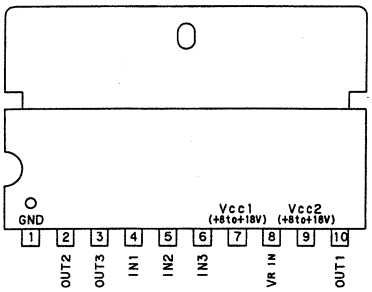

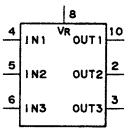

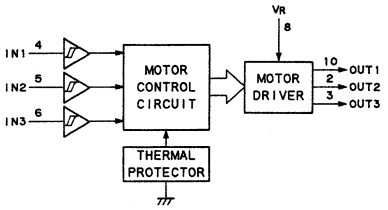

INPUT			OUTPUT			OPERATION
IN1	IN2	IN3	OUT1	OUT2	OUT3	
0	0	X	0	0	0	BRAKE
1	0	0	1	0	OPEN	MOTOR CURRENT OUT1→OUT2
1	0	1	0	1	OPEN	MOTOR CURRENT OUT2→OUT1
0	1	0	1	OPEN	0	MOTOR CURRENT OUT1→OUT3
0	1	1	0	OPEN	1	MOTOR CURRENT OUT3→OUT1
1	1	X	0	0	0	BRAKE

0;LOW LEVEL
1;HIGH LEVEL
X;DON'T CARE

BR9021BF (ROHM) FLAT PACKAGE

C-MOS 2k (128x16) BITS SERIAL EEPROM
– TOP VIEW –

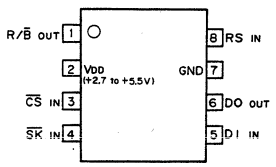

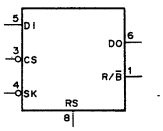

INPUT
CS ; CHIP SELECT
DI ; OP CODE, ADDRESS, AND SERIAL DATA
RS ; RESET
SK ; SERIAL DATA CLOCK

OUTPUT
DO ; SERIAL DATA
R/B ; READY/BUSY STATUS SIGNAL

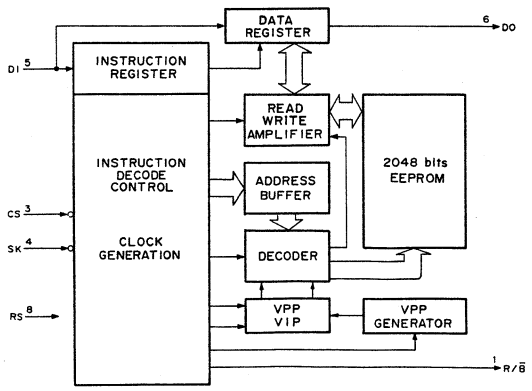

BX3915A (SONY)

SYNC SEPARATOR
– REAR VIEW –

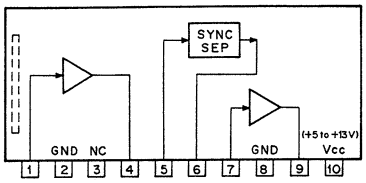

CX23065A (SONY)

N-MOS PHASE COMPARATOR WITH INVERSION AMPLIFIER
– PRINTED SIDE VIEW –

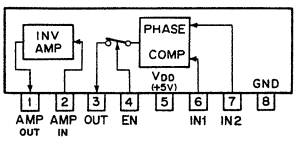

EN	OUT
1	ACTIVE
0	HIGH IMPEDANCE

1; HIGH LEVEL
0; LOW LEVEL

TIMING CHART

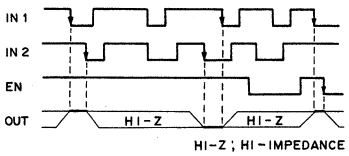

HI-Z ; HI-IMPEDANCE

CXA1102M (SONY) FLAT PACKAGE
CXA1102P (SONY)

DOLBY TYPE-B NOISE REDUCTION SYSTEM
– TOP VIEW –

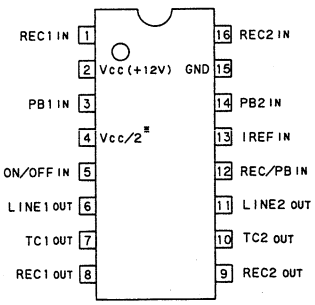

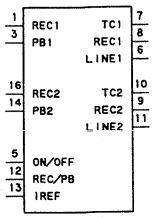

*Vcc/2;SINGLE VOLTAGE ;+6V
DOUBLE VOLTAGE ;GND

INPUT
IREF ;REFERENCE CURRENT SOURCE
ON/OFF;DOLBY NR ON/OFF SELECT(H;OFF/L;ON)
PB ;PB(DECODE) INPUT
REC ;REC(ENCODE) INPUT
REC/PB;REC/PB SELECT(H;PB/L;REC)

OUTPUT
LINE;LINE(DECODE) OUTPUT
REC ;REC(ENCODE) OUTPUT
TC ;LEVEL DETECTOR TIME CONSTANT

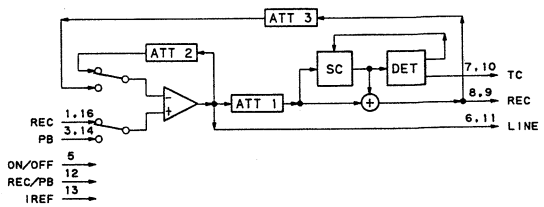

CXD1132Q (SONY) FLAT PACKAGE

C-MOS TIME CODE GENERATOR/READER
– TOP VIEW –

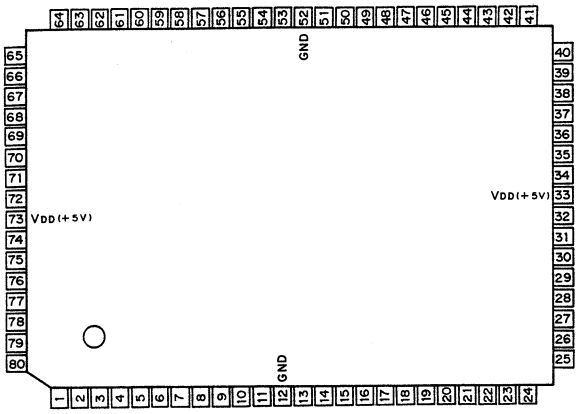

PIN NO.	I/O	SYMBOL	PIN NO.	I/O	SYMBOL	PIN NO.	I/O	SYMBOL	PIN NO.	I/O	SYMBOL	PIN NO.	I/O	SYMBOL
1	I/O	DB5	17	I	CCS	33	–	V_{DD}	49	I	C1MI	65	I	TCIN
2	I/O	DB4	18	I	CWR	34	I/O	DA1	50	O	C1MO	66	O	DCLK
3	I/O	DB3	19	I	CRD	35	I/O	DA0	51	O	C2MO	67	O	DATA
4	I/O	DB2	20	O	INT	36	I	DSP	52	–	GND	68	O	RFLD
5	I/O	DB1	21	I	STBY	37	O	DTSE	53	O	CKO	69	O	RDSY
6	I/O	DB0	22	I	TST1	38	O	VRCK	54	I	CKIN	70	O	LRP
7	O	STOP	23	I	TST2	39	I	SLLM	55	I	SLCK	71	O	BUSY
8	I/O	D7	24	I	TST3	40	O	RVDO	56	I	GCSI	72	I	BA2
9	I/O	D6	25	I	PON	41	I	RCSI	57	I	S1	73	–	V_{DD}
10	I/O	D5	26	I	FLD1	42	I	VITC	58	O	VTGO	74	I	BA1
11	I/O	D4	27	I	RTIM	43	I	FRMI	59	O	VTO	75	I	BA0
12	–	GND	28	I	CDIR	44	O	FRMO	60	O	LTCO	76	I	BWR
13	I/O	D3	29	I	CTLI	45	O	GLSY	61	I	LRES	77	I	BRD
14	I/O	D2	30	I/O	DWR	46	I	HDI	62	I	VCEI	78	I	BCS
15	I/O	D1	31	I/O	DA3	47	O	HDO	63	O	LSHO	79	I/O	BD7
16	I/O	D0	32	I/O	DA2	48	O	VDO	64	I	C2MI	80	I/O	BD6

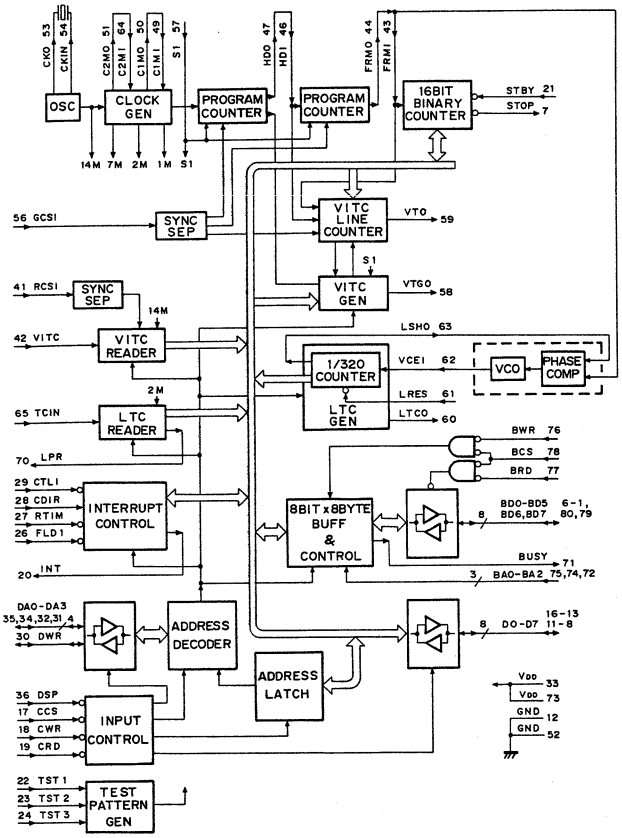

SVO-5800/5800P (1)
SVP-5600/5600P (1)

SIGNAL DESCRIPTION

BA0-BA2
B ADDRESS INPUTS
BCS B CHIP ENABLE INPUT ("L":ENABLE)
BD0-BD7
B DATA I/O
BRD B READ INPUT ("L":READ)
BUSY B BUSY OUTPUT
BWR B WRITE INPUT ("L":WRITE)
C1MI SYSTEM CLOCK INPUT
C1MO CLOCK 1 OUTPUT (CKIN X 1/16)
C2MI LTC READ CLOCK INPUT
C2MO CLOCK 2 OUTPUT (CKIN X 1/8)
CCS C CHIP ENABLE INPUT ("L":ENABLE)(when DSP is low)
ADDRESS LATCH ENABLE INPUT ("L":ENABLE)(when DSP is high)
CDIR CTL DIRECTION INPUT
CKIN SYSTEM CLOCK INPUT

VIDEO SIGNAL FORMAT	CKIN
SMPTE 29.97HZ 525LINE	14.318MHZ
EBU 25HZ 625LINE	14.500MHZ

CKO CLOCK OUTPUT
CRD C READ INPUT ("L":READ)
CTLI CTL SIGNAL INPUT
CWR C WRITE INPUT ("L":WRITE)
D0-D7 DATA I/O (when DSP is low)/
ADDRESS INPUTS
DA0-DA3
E ADDRESS INPUTS (when DSP is high)
D ADDRESS OUTPUT (when DSP is low)
DATA DEMODULATED SERIAL DATA OUTPUT
DCLK DEMODULATED CLOCK OUTPUT
DSP DISPLAY BUS SELECT INPUT
DSP controls CCS,DA0-DA3 and DVR.
DTSE VITC DATA SEARCH FLAG OUTPUT
DWR WRITE ENABLE OUTPUT ("L":ENABLE)(when DSP is low)
E ADDRESS 4 INPUT (when DSP is high)
EA4 ADDRESS BUS INPUT
FLD1 FIELD REFERENCE INPUT ("L":FILD 1)
FRMI FRAME SIGNAL INPUT
FRMO FRAME SIGNAL OUTPUT
GCSI COMPOSITE SYNC INPUT
GLSY LOST SYNC FLAG OUTPUT
HDI HORIZONTAL SYNC INPUT
HDO HORIZONTAL SYNC OUTPUT
INT ITERRUPT REQUEST OUTPUT
LPR LTC READ REQUEST OUTPUT
LRES LTC COUNTER RESET INPUT ("L":RESET)
LSHO SYNCHRONOUS SIGNAL OUTPUT
LTCO LTC SIGNAL OUTPUT
PON SYSTEM RESET INPUT ("L":PON)
RCSI COMPOSITE SYNC INPUT
RDSY READ SYNC WORD DATA OUTPUT
RESS RESET INPUT ("L":RTIM)
RFLD FIELD DATA OUTPUT
RTIM TIME ADDRESS RESET INPUT ("L":RESET)
RVDO VITC READ DATA OUTPUT

S1 SIGNAL FORMAT SELECT INPUT
"H":NTSC/PAL-M 29.94HZ 525LINE
"L":PAL/SECAM 25Hz 625LINE
SLCK SELECT CLOCK INPUT

SLCK	"L"		"H"	
CKIN	14.318MHZ	14.5MHZ	7.159MHZ	7.25MHZ
SPEC	SMPTE	EBU	SMPTE	EBU

SLLM READ SIZE SELECT INPUT
STBY STANDBY READ FLAG INPUT
STOP STOP OUTPUT ("L":STOP)
TCIN LONGITUDINAL TIME AND CONTROL CODE INPUT
TST1-TST3
TEST INPUT
VCEI LTC CLOCK INPUT
VDO HORIZONTAL SYNC DRIVE OUTPUT
VITC VITC SIGNAL INPUT
VTGO VITC GATE SIGNAL OUTPUT
VTO VITC SIGNAL OUTPUT ("H":VITC)

CXD1217M (SONY) FLAT PACKAGE

C-MOS SYNC GENERATOR

– TOP VIEW –

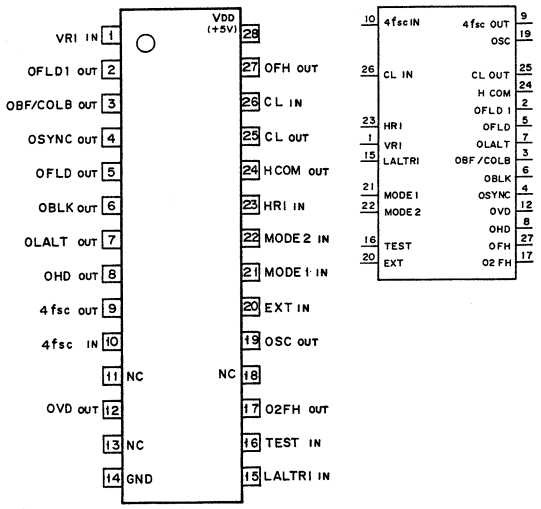

SYSTEM	4fsc	CLOCK
NTSC	910fH	910fH
PAL	1135fH+2fV	908fH
PALM	909fH	910fH
SECAM	—	908fH

INPUT		SYSTEM
MODE1	MODE2	
0	0	NTSC
0	1	SECAM
1	0	PALM
1	1	PAL

0 ; LOW LEVEL
1 ; HIGH LEVEL

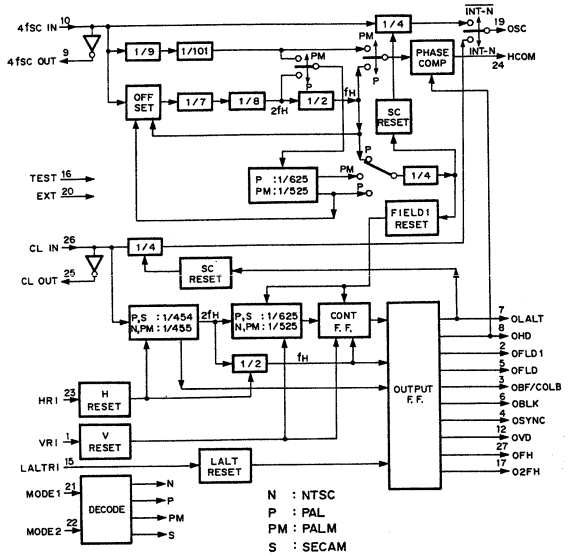

INPUT

4fSC IN	; 4fSC INPUT
CL IN	; CLOCK INPUT
EXT	; SYNC MODE SELECT (L ; INTERNAL/H ; EXTERNAL)
HRI	; H RESET
LALTRI	; LINE CHANGE RESET
MODE 1,2	; SYSTEM SELECT
VRI	; V RESET

OUT PUT

4fSC OUT	; 4fSC OUTPUT
CL OUT	; CLOCK OUTPUT
HCOM	; PHASE COMPARATOR
02fH	; 2fH OUTPUT
OBF/COLB	; BURST FLAG/COLOR BLANKING
OBLK	; COMPOSITE BLANKING
OFH	; H FREQUENCE
OFLD	; EVEN, ODD
OFLD1	; FIELD1
OHD	; H DRIVE
OLALT	; LINE CHANGE
OSC	; SUBCARRIER
OSYNC	; COMPOSITE SYNC
OVD	; V DRIVE

(NTSC, PALM)

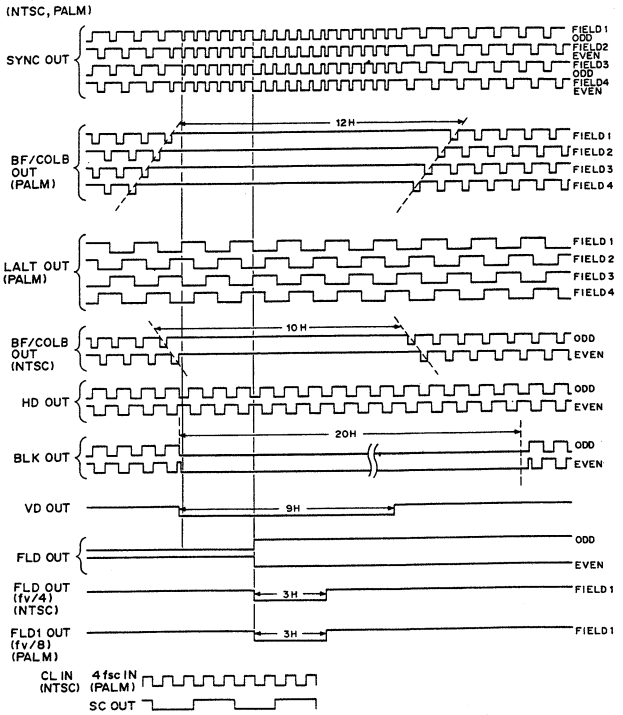

(PAL, SECAM)

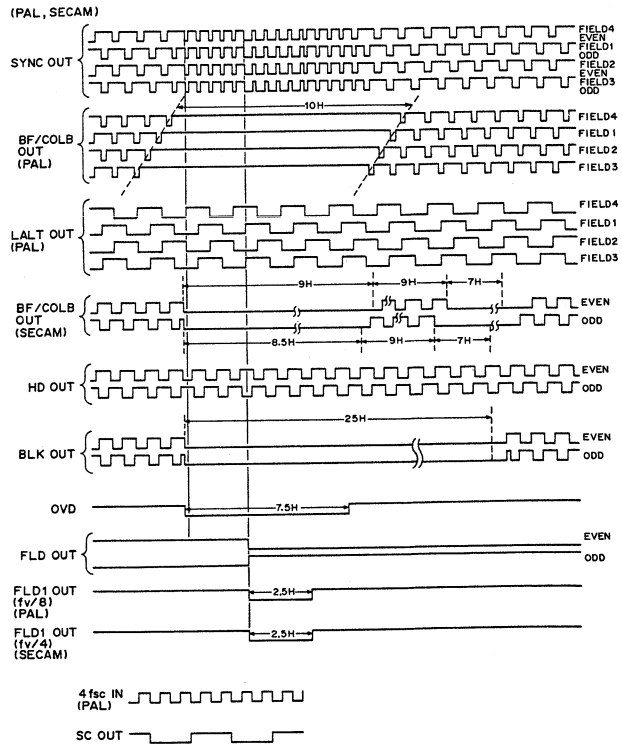

PIN NO.	I/O	SYMBOL	PIN NO.	I/O	SYMBOL	PIN NO.	I/O	SYMBOL	PIN NO.	I/O	SYMBOL
1	–	GND	31	–	GND	61	–	GND	91	–	GND
2	I	CSR0	32	I	CMCK	62	O	MPL	92	I	YMCK
3	I	CSR1	33	I	DOP	63	O	LIMO	93	I	PINV
4	I	CSR2	34	I	USC0	64	I	SW1	94	I	NRFD
5	I	CSR3	35	I	JPI0	65	I	MTST	95	–	NC
6	O	CMW0	36	I	JPI1	66	O	FSC	96	I	AHD
7	O	CMW1	37	I	YSYS	67	I	INFS	97	I	CHD
8	O	CMW2	38	I	PHEN	68	I	MPXT	98	I	YHD
9	O	CMW3	39	I	PD	69	I	MMTC	99	I	WEVN
10	–	NC	40	O	PED0	70	I	EXFS	100	I	OFSB
11	–	NC	41	O	PED1	71	I	CS0	101	I	SADM
12	I	YSR0	42	O	PED2	72	I	CS1	102	I	CLR
13	I	YSR1	43	O	PED3	73	I	WY7	103	O	CMPT
14	–	V_{DD} (+5V)	44	–	V_{DD} (+5V)	74	–	V_{DD} (+5V)	104	–	V_{DD} (+5V)
15	–	GND	45	–	GND	75	–	GND	105	–	GND
16	I	YSR2	46	O	COCK	76	I	WY6	106	O	RBT
17	I	YSR3	47	O	VCOO	77	I	WY5	107	O	ACK
18	O	YMW0	48	I	VCOI	78	I	WY4	108	I	YDLY
19	O	YMW1	49	O	OUT0	79	I	WY3	109	I	CTH
20	O	YMW2	50	I	IM0	80	I	WY2	110	–	NC
21	O	YMW3	51	O	OUT1	81	I	WY1	111	I	FNR
22	–	NC	52	I	IM1	82	I	WY0	112	I	WVMT
23	I	YSR4	53	–	AG	83	I	WCY7	113	I	WCDT
24	I	YSR5	54	O	OUT2	84	I	WCY6	114	I	WUV0
25	I	YSR6	55	I	IM2	85	I	WCY5	115	I	WUV1
26	I	YSR7	56	I	LIMI	86	I	WCY4	116	I	YEV0
27	O	YMW4	57	O	BPE0	87	I	WCY3	117	I	YEV1
28	O	YMW5	58	O	BPE1	88	I	WCY2	118	I	YEV2
29	O	YMW6	59	O	BPE2	89	I	WCY1	119	I	CEV0
30	O	YMW7	60	O	BPE3	90	I	WCY0	120	I	CEV1

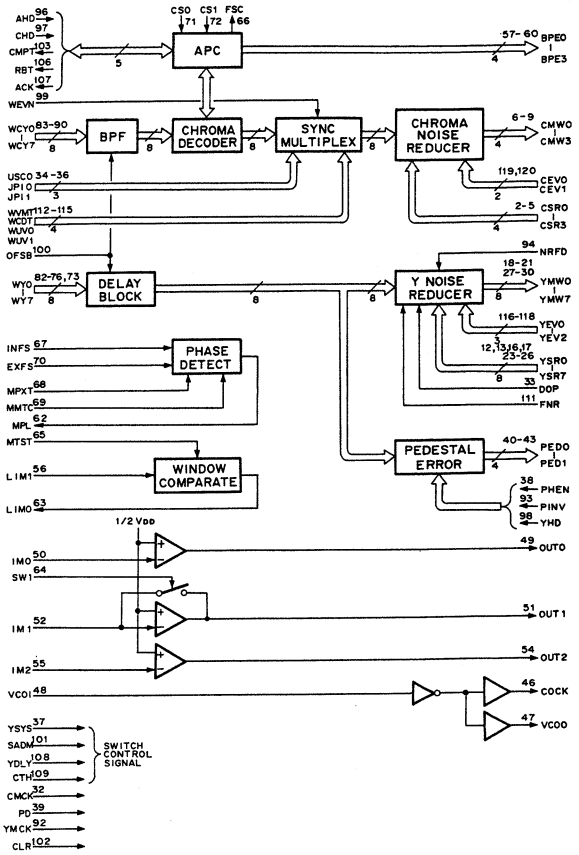

*1 CHROMA SYSTEM MODE SELECTION

CS1	CS0	MODE
0	0	NTSC
0	1	PAL
1	0	CHROMA BASE BAND INPUT
1	1	PROHIBITION

*2 Y SIGNAL NOISE REDUCER SELECTION

YEV0	YEV1	YEV2	OPERATION
0	0	0	NOISE REDUCER (SOFT)
0	0	1	NOISE REDUCER (MIDDLE)
0	1	0	NOISE REDUCER (STRONG)
0	1	1	AFTER IMAGE
1	0	0	VERTICAL FILTER
1	0	1	FADE IN/OUT
1	1	0	SELECT AFTER IMAGE
1	1	1	NO OPERATION

*3 CHROMA SIGNAL NOISE REDUCER SELECTION

CEV0	CEV1	OPERATION
0	0	NOISE REDUCER (SOFT)
0	1	NOISE REDUCER (MIDDLE)
1	0	NOISE REDUCER (STRONG)
1	1	NO OPERATION

0 : LOW LEVEL
1 : HIGH LEVEL

INPUT

	AG	; ANALOG GND
	AHD	; H SYNC INPUT FOR APC
*3	CEV0, 1	; C NOISE REDUCER MODE SELECT INPUTS
	CHD	; H SYNC INPUT FOR BURST DETECT
	CLR	; DIRECT CLEAR INPUT
	CMCK	; CLOCK INPUT FOR CHROMA SYSTEM
	CSR0 – CSR3	; CHROMA READ DATA INPUTS
*1	CS0, 1	; CHROMA SYSTEM SELECT INPUTS
	CTH	; CHROMA TEST TERMINAL
	DOP	; DROPOUT CONPENSATION PULSE INPUT
	EXFS	; EXTERNAL Fsc INPUT
	FNR	; NOISE REDUCER ON/OFF CONTROL INPUT
	IM0 – IM2	; AUDIO RANGE AMP INPUTS
	INFS	; INTERNAL Fsc INPUT
	JPI0, 1	; ID CODE MONITOR INPUTS (D2, D3)
	LIMI	; WINDOW COMPARATOR INPUT
	MMTC, MPXT, MTST, PD	; TEST PIN
	NRFD	; Y FIELD NOISE REDUCER DATA INPUT
	OFSB	; OFF SET BINARY MODE INPUT
	PHEN	; CHROMA APC SYSTEM CONTROL INPUT
	PINV	; PEDESTAL CLAMP ERROR INVERT INPUT
	SADM	; Y/C SIGNAL, H : COMPOSITE SIGNAL SELECT INPUT
	SW1	; AUDIO RANGE SWITCH INPUT
	USC0	; USER CODE FOR OPTION
	VCOI	; VCO INPUT
	WCDT	; WRITE FRAMING CODE TIMING INPUT
	WCY0 – WCY7	; L CHROMA SIGNAL, H : COMPOSITE SIGNAL INPUTS
	WEVN	; WRITE EVEN/ODD FIELD MONITOR INPUT
	WUV0, 1	; WRITE U/V TIMING INPUTS
	MVMT	; WRITE VIDEO MUTE
	WY0 – WY7	; WRITE Y SIGNAL INPUTS
	YDLY	; Y DELAY ADJUST INPUT
*2	YEV0 – YEV2	; Y NOISE REDUCER MODE SELECT INPUTS
	YHD	; Y H DRIVE PULSE INPUT
	YMCK	; Y MEMORY CONTROL CLOCK INPUT
	YSR0 – YSR7	; Y MEMORY DATA INPUTS
	YSYS	; Y DELAY ADJUST INPUT (H : 3.58MHz C SYSTEM, L : 4.43MHz C SYSTEM)

OUTPUT

	ACK	; CLOCK OUTPUT FOR APC (H : B/W MODE, L : COLOR MODE)
	BPE0 – BPE3	; PHASE ERROR OUTPUTS FOR APC (OFFSET BINARY OUTPUTS)
	CMPT	; MONITOR TERMINAL FOR TEST
	CMW0 – CMW3	; CHROMA WRITE DATA OUTPUTS
	COCK	; VCO OUT CLOCK OUTPUT
	FSC	; 1/4 CLOCK OUTPUT
	LIMO	; WINDOW COMPARATOR OUTPUT
	MPL	; PHASE COMPARATOR ERROR OUTPUT
	OUT0 – OUT2	; AUDIO RANGE AMP OUTPUTS
	PED0 – PED3	; PEDESTAL CLAMP ERROR OUTPUTS
	RBT	; MONITOR PIN FOR TEST
	VCOO	; VCO OUTPUT
	YMW0 – YMW7	; Y MEMORY DATA OUTPUTS

CXD2105AQ (SONY) FLAT PACKAGE

C-MOS DIGITAL COMB FILTER FOR VTR'S

– TOP VIEW –

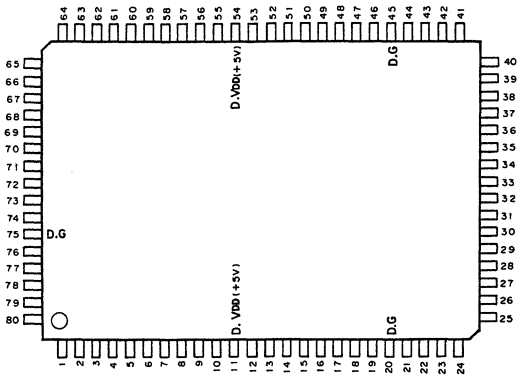

PIN No.	I/O	SIGNAL	PIN No.	I/O	SIGNAL	PIN No.	I/O	SIGNAL	PIN No.	I/O	SIGNAL
1	I	BPV	21	I	IGD0	41	I	IGW2	61	I	IGY1
2	O	OPER	22	I	IGC1	42	I	IGW3	62	I	IGY2
3	–	A.VDD P	23	I	IGIH	43	I	IGW4	63	I	IGH1
4	I	IGPE	24	I	IGRP	44	I	IGW5	64	O	ORZH
5	I	IGPC	25	I	IGOC	45	–	D.G	65	O	OR00
6	–	A.G P	26	–	A.VDD C	46	I/O	BMY1	66	I	IGRC
7	I	IGZV	27	O	OCIO	47	I/O	BMY2	67	I	IYC8
8	O	OZVD	28	O	OCVG	48	I/O	BMY3	68	I	IYC7
9	O	OZPS	29	–	ICVR	49	I/O	BMY4	69	I	IYC6
10	I	IGZP	30	O	OCIR	50	I/O	BMY5	70	I	IYC5
11	–	D.VDD	31	–	A.G C	51	I/O	BMY6	71	I	IYC4
12	I/O	BMC1	32	O	OCVB	52	I/O	BMY7	72	I	IYC3
13	I/O	BMC2	33	O	OYVB	53	I/O	BMY8	73	I	IYC2
14	I/O	BMC3	34	–	A.G Y	54	–	D.VDD	74	I	IYC1
15	I/O	BMC4	35	O	OYIR	55	I	IGAC	75	–	D.G
16	I/O	BMC5	36	–	IYVR	56	I	IGL3	76	O	OADC
17	I/O	BMC6	37	O	OYVG	57	I	IGL2	77	I	IGNP
18	I/O	BMC7	38	O	OYIO	58	I	IGL1	78	I	IGBE
19	I/O	BMC8	39	–	A.VDD Y	59	I/O	BASO	79	I	IGPF
20	–	D.G	40	I	IGW1	60	I	IGC2	80	I	IGCK

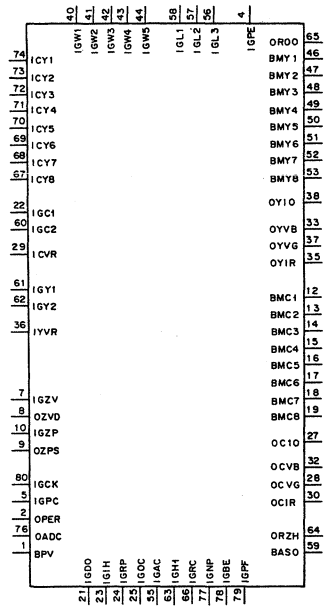

INPUT

BPV	; EXT/INT CLOCK SELECT
ICVR	; ESTABLISHES MAXIMUM AMPLITUDE VALUE FOR OCIO (PIN 27)
IGAC	; V CORRELATION CIRCUIT ON/OFF
IGBE	; SINGLE WAVE DETECTION ON/OFF (Y/C SEPARATION MODE)
IGC1	; V CORRELATION CIRCUIT SELECT
IGC2	; CHROMA FLAT SECTION HORIZONTAL FILTER SELECT (Y/C SEPARATION MODE)
IGCK	; EXTERNAL CLOCK
IGD0	; DROPOUT CORRECTION
IGH1	; FLAT SECTION HORIZONTAL FILTER SELECT (Y/C SEPARATION MODE)
IGIH	; SLEW MODE SET
IGL1 – IGL3	; LIMITER LEVEL ADJUST FOR Y SIGNAL COMB FILTER
IGNP	; NTSC/PAL FORMAT SELECT
IGOC	; OUTPUT ENABLE
IGPC	; VCO CONTROL
IGPE	; TEST
IGPF	; PLL SUBCARRIER
IGRC	; DELAY LINE LENGTH ADJUST
IGRP	; Y/C SEPARATION AND PLAYBACK MODE SELECT
IGW1 – IGW5	; Y COMB FILTER DEPTH ADJUST
IGY1, IGY2	; EDGE SECTION HORIZONTAL FILTER SELECT (Y/C SEPARATION MODE)
IGZP	; 1-BIT DELAY CIRCUIT
IGZV	; VCR HEAD SWITCHING
IYC1 – IYC8	; VIDEO SIGNAL
IYVR	; ESTABLISHES MAXIMUM AMPLITUDE VALUE FOR OYIO (PIN 38)

OUTPUT

OADC	; CLOCK
OCIO	; CHROMA ANALOG SIGNAL
OCIR	; CONNECT A RESISTOR 16x LARGE THAN THE RESISTOR AT OCIO (PIN 27)
OCVB	; CONNECT TO DIGITAL GND WHICH HAS A CAPACITANCE OF UP TO 0.1 µF
OCVG	; CONNECT TO AN ANALOG POWER SUPPLY WHICH HAS A CAPACITANCE OF UP TO 0.1 µF
OPER	; PLL ERROR
OR00	; "0" IS DETECTED AT ALL INPUTS
ORZH	; 1-BIT DELAY CIRCUIT
OYIO	; Y ANALOG SIGNAL
OYIR	; CONNECT A RESISTOR 16x LARGE THAN THE RESISTOR AT OYIO (PIN 38)
OYVB	; CONNECT TO DIGITAL GND WHICH HAS A CAPACITANCE OF UP TO 0.1 µF
OYVG	; CONNECT TO AN ANALOG POWER SUPPLY WHICH HAS A CAPACITANCE OF UP TO 0.1 µF
OZPS	; 1-BIT DELAY CIRCUIT
OZVD	; VSYNC PERIOD MASK

INPUT/OUTPUT

BASO	; EDGE DETECTION LEVEL SELECT (Y/C SEPARATION MODE)
BMC1 – BMC8	; CHROMA DIGITAL SIGNAL
BMY1 – BMY8	; Y DIGITAL SIGNAL

OTHER

A.G C	; ANALOG GND FOR CHROMA D/A
A.G P	; ANALOG GND FOR VCO
A.G Y	; ANALOG GND FOR Y D/A
A.VDD C	; ANALOG POWER SUPPLY FOR CHROMA D/A
A.VDD P	; ANALOG POWER SUPPLY FOR VCO
A.VDD Y	; ANALOG POWER SUPPLY FOR Y D/A
D.G	; DIGITAL GND
D.VDD	; POWER SUPPLY FOR DIGITAL

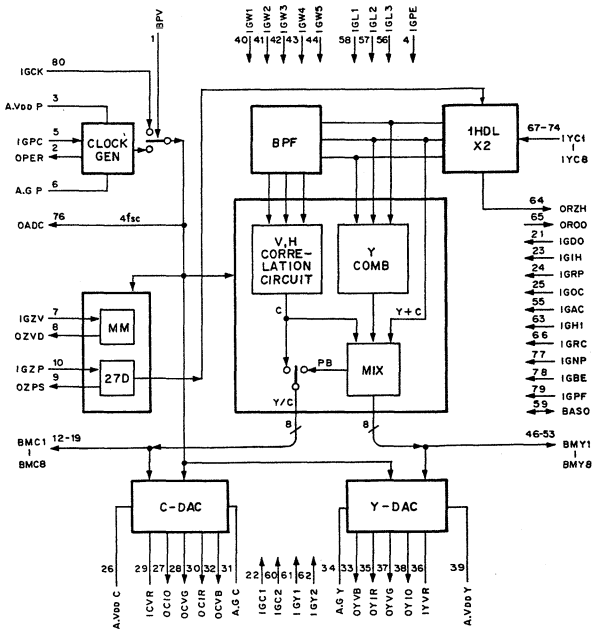

CXD8042Q (SONY) FLAT PACKAGE

C-MOS TIMECODE CONTROLLER

– TOP VIEW –

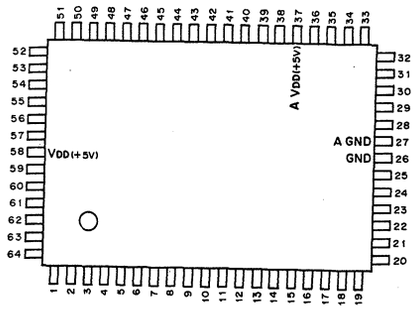

(A V_{DD} = +5V)
(V_{DD} = +5V)

PIN NO.	I/O	SIGNAL	PIN NO.	I/O	SIGNAL	PIN NO.	I/O	SIGNAL	PIN NO.	I/O	SIGNAL
1	I/O	PA6	17	I/O	PC6/CO0	33	I	AN5	49	I/O	PD0
2	I/O	PA7	18	I/O	PC7/CO1	34	I	AN6	50	I/O	PD1
3	I/O	PB0	19	I	$\overline{NMI}$	35	I	AN7	51	I/O	PD2
4	I/O	PB1	20	I	INT1	36	I	V_{AREF}	52	I/O	PD3
5	I/O	PB2	21	I/O	MODE1	37	–	A V_{DD}	53	I/O	PD4
6	I/O	PB3	22	I	$\overline{RESET}$	38	O	$\overline{RD}$	54	I/O	PD5
7	I/O	PB4	23	I/O	MODE0	39	O	$\overline{WR}$	55	I/O	PD6
8	I/O	PB5	24	I	X2	40	O	ALE	56	I/O	PD7
9	I/O	PB6	25	I	X1	41	I/O	PF0	57	I	$\overline{STOP}$
10	I/O	PB7	26	–	GND	42	I/O	PF1	58	–	V_{DD}
11	I/O	PC0/TxD	27	–	A GND	43	I/O	PF2	59	I/O	PA0
12	I/O	PC1/RxD	28	I	AN0	44	I/O	PF3	60	I/O	PA1
13	I/O	PC2/$\overline{SCK}$	29	I	AN1	45	I/O	PF4	61	I/O	PA2
14	I/O	PC3/$\overline{INT2}$/TI	30	I	AN2	46	I/O	PF5	62	I/O	PA3
15	I/O	PC4/TO	31	I	AN3	47	I/O	PF6	63	I/O	PA4
16	I/O	PC5/CI	32	I	AN4	48	I/O	PF7	64	I/O	PA5

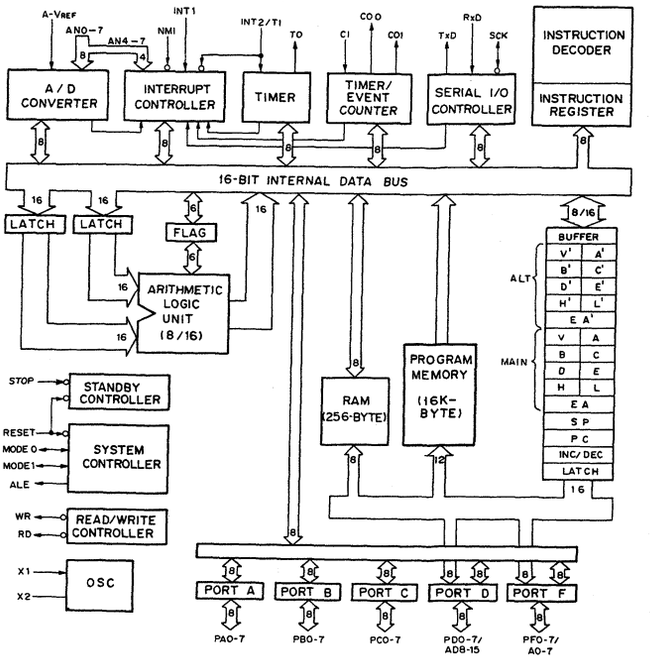

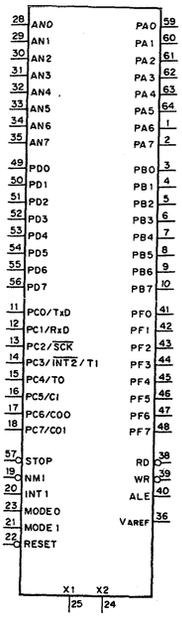

INPUT

AN0-7	; ANALOG
CI	; COUNTER
INT1	; MASKABLE INTERRUPT REQUEST 1
INT2/TI	; MASKABLE INTERRUPT REQUEST 2/TIMER
NMI	; NON-MASKABLE INTERRUPT
RxD	; RECEIVE DATA
RESET	; SYSTEM RESET
STOP	; SYSTEM STOP
V_{AREF}	; REFERENCE VOLTAGE
X1,2	; EXTERNAL X'tal

OUTPUT

ALE	; ADDRESS LATCH ENABLE
CO0,1	; COUNTER OUTPUT 0,1
RD	; READ STROBE
TO	; TIMER
TxD	; TRANSMIT DATA
WR	; WRITE STROBE

INPUT/OUTPUT

MODE 0,1	; MEMORY MODE 0,1
PA0-7	; PORT A
PB0-7	; PORT B
PC0-7	; PORT C
PD0-7	; PORT D
PF0-7	; PORT F
SCK	; SERIAL CLOCK

CXD8343AP (SONY)

C-MOS CTL COMPENSATOR BY FREQUENCY GENERATOR

– TOP VIEW –

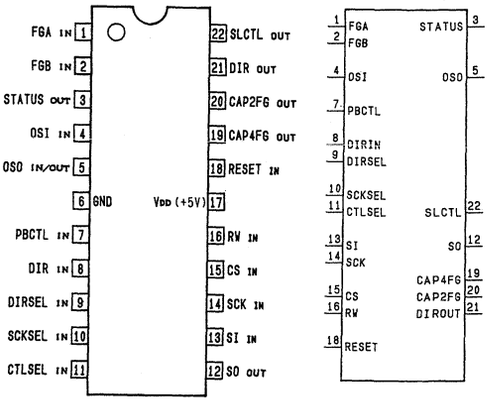

INPUT

CS	; CHIP SELECT
CTLSEL	; SLCTL OUT (PBCTL/QUASI – CTL) SELECT
DIRIN	; CAPSTAN DIRECTION
DIRSEL	; CAPSTAN DIRECTION (EXT/INT) SELECT
FGA	; FG (A)
FGB	; FG (B)
OSI	; OSCILLATOR
PBCTL	; PBCTL
RESET	; RESET
SCK	; SERIAL CLOCK
SCKSEL	; SERIAL CLOCK EDGE (UP/DOWN) SELECT
SI	; SERIAL IN

OUTPUT

CAP2FG	; CAPSTAN 2FG
CAP4FG	; CAPSTAN 4FG
DIROUT	; CAPSTAN DIRECTION
SLCTL	; SELECTED CTL
SO	; SERIAL OUT
STATUS	; STATUS

INPUT/OUTPUT

OSO	; OSCILLATOR OUT/CLOCK IN

CXK48324Q (SONY)

C-MOS 2.4M (960x306x8) BITS 3 PORTS VIDEO FIELD MEMORY
– TOP VIEW –

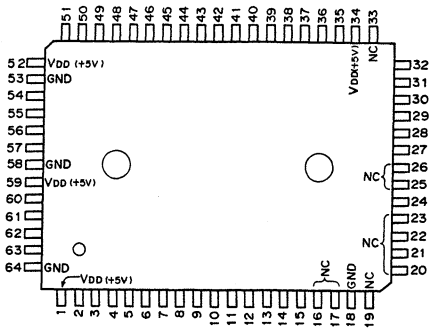

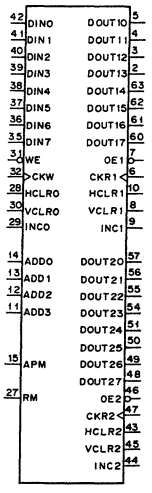

(V_{DD} = + 5 V)

PIN No.	I/O	SIGNAL	PIN No.	I/O	SIGANL	PIN No.	I/O	SIGNAL
1	–	V_{DD}	23	–	NC	45	I	VCLR2
2	O	DO13	24	I	TE	46	I	OE2
3	O	DO12	25	–	NC	47	I	CKR2
4	O	DO11	26	–	NC	48	O	DO27
5	O	DO10	27	I	RM	49	O	DO26
6	I	CKR1	28	I	HCLR0	50	O	DO25
7	I	OE1	29	I	INCO	51	O	DO24
8	I	VCLR1	30	I	VCLR0	52	–	V_{DD}
9	I	INC1	31	I	WE	53	–	GND
10	I	HCLR1	32	I	CKW	54	O	DO23
11	I	ADD3	33	–	NC	55	O	DO22
12	I	ADD2	34	–	V_{DD}	56	O	DO21
13	I	ADD1	35	I	DIN7	57	O	DO20
14	I	ADD0	36	I	DIN6	58	–	GND
15	I	APM	37	I	DIN5	59	–	V_{DD}
16	–	NC	38	I	DIN4	60	O	DO17
17	–	NC	39	I	DIN3	61	O	DO16
18	–	GND	40	I	DIN2	62	O	DO15
19	–	NC	41	I	DIN1	63	O	DO14
20	–	NC	42	I	DIN0	64	–	GND
21	–	NC	43	I	HCLR2			
22	–	NC	44	I	INC2			

INPUT

ADD0 – ADD3	; ADDRESS INPUT
APM	; ADDRESS PRESET MODE ENABLE
CKR1, CKR2	; PORT 1 OR 2 SHIFT SIGNAL INPUT
CKW	; PORT 0 SHIFT SIGNAL INPUT
DIN0 – DIN7	; PORT 0 DATA INPUT
HCLR0 – HCLR2	; PORT 0 – 2 HORIZONTAL CLEAR
INC0 – INC2	; PORT 0 – 2 LINE INCREMENT
RM	; RECURSIVE MODE ENABLE
TE	; TEST MODE ENABLE
VCLR0 – VCLR2	; PORT 0 – 2 VERTICAL CLEAR
OE1, OE2	; PORT 1 OR 2 OUTPUT ENABLE
WE	; PORT 0 WRITE ENABLE

OUTPUT

DO10 – DO17	; PORT 1 DATA OUTPUT
DO20 – DO27	; PORT 2 DATA OUTPUT

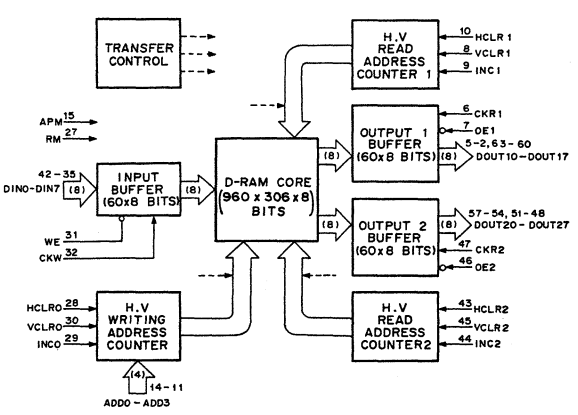

CXL5502M (SONY) FLAT PACKAGE

C-MOS CCD1H DELAY LINE (NTSC)
– TOP VIEW –

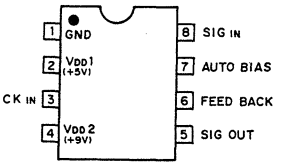

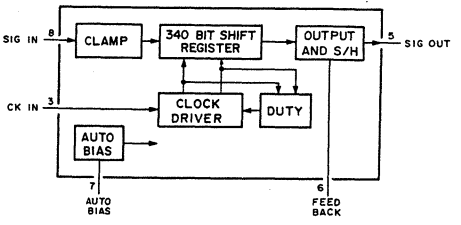

CXL5509M (SONY) FLAT PACKAGE

C-MOS CCD 1H/2H DELAY LINE FOR NTSC
– TOP VIEW –

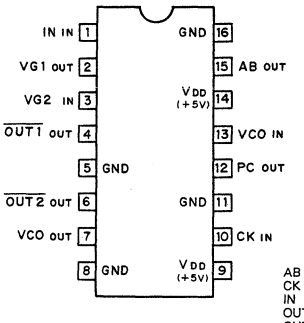

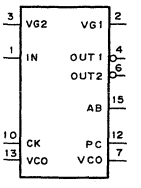

AB	; AUTO BIAS DC OUTPUT
CK	; CLOCK (4fsc)
IN	; POSITIVE SIGNAL INPUT
OUT1	; 1H DELAY SIGNAL OUTPUT (NEGATIVE)
OUT2	; 2H DELAY SIGNAL OUTPUT (NEGATIVE)
PC	; PHASE COMPARATER OUTPUT
VCO	; VCO (4fsc) OUTPUT OR GND (PIN 7) VCO INPUT (PIN 13)
VG1	; GATE BIAS 1 DC OUTPUT
VG2	; GATE BIAS 2 DC INPUT

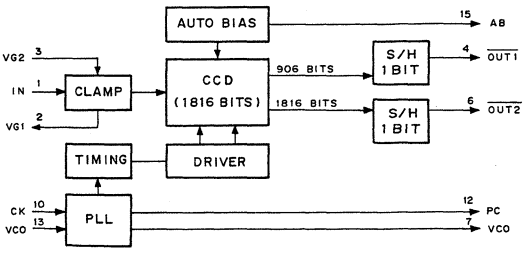

(V_{DD} = AV_{DD} = + 5V)

PIN No.	I/O	SIGNAL	PIN No.	I/O	SIGNAL	PIN No.	I/O	SIGNAL	PIN No.	I/O	SIGNAL
1	0	PB5/PP0013/PP0113	26	I/O	PD4	51	I/O	PF4/AN8	76	0	PE2/PWM0
2	0	PB4/PP0012/PP0112	27	I/O	PD3	52	-	AGND	77	I	PE1/$\overline{EC}$/$\overline{INT2}$
3	0	PB3/PP0011	28	I/O	PD2	53	-	AV_{REF}	78	I	PE0/$\overline{INT0}$/XOUT
4	0	PB2/PP0010	29	I/O	PD1	54	-	AV_{DD}	79	I/O	PI7/SI1
5	0	PB1/PP0009	30	I/O	PD0	55	I	PF3/AN7	80	I/O	PI6/SO1
6	0	PB0/PP0008	31	0	PH7	56	I	PF2/AN6	81	I/O	PI5/$\overline{SCK1}$
7	I/O	PC7/RT07	32	0	PH6	57	I	PF1/AN5	82	I/O	PI4/$\overline{INT1}$
8	I/O	PC6/RT06	33	0	PH5	58	I	PF0/AN4	83	I/O	PI3/TO
9	I/O	PC5/RT05	34	0	PH4	59	I	AN3	84	I/O	PI2/$\overline{PWM}$
10	I/O	PC4/RT04	35	0	PH3	60	I	AN2	85	I/O	PI1/PO
11	I/O	PC3/RT03	36	0	PH2	61	I	AN1	86	I	PI0/PCK/OSC1
12	I/O	PC2/PP0018	37	0	PH1	62	I	AN0	87	I	PK0/OSC0
13	I/O	PC1/PP0017	38	0	PH0	63	I	PG7/EXI1/PMSK	88	-	GND
14	I/O	PC0/PP0016	39	I	$\overline{MP}$	64	I	PG6/EXI0	89	-	V_{DD}
15	I/O	PJ7	40	I/O	$\overline{RST}$	65	I	PG5/SYNC1	90	-	NC
16	I/O	PJ6	41	-	GND	66	I	PG4/SYNC0/PMI	91	0	PA7/PP0007/PP0107
17	I/O	PJ5	42	-	XTAL	67	I	PG3/$\overline{PBCTL}$	92	0	PA6/PP0006/PP0106
18	I/O	PJ4	43	I	EXTAL	68	I	PG2/DPG	93	0	PA5/PP0005/PP0105
19	I/O	PJ3	44	I	$\overline{CS0}$	69	I	PG1/DFG	94	0	PA4/PP0004/PP0104
20	I/O	PJ2	45	I	SI0	70	I	PG0/CFG	95	0	PA3/PP0003/PP0103
21	I/O	PJ1	46	0	SO0	71	0	PE7/DAB1	96	0	PA2/PP0002/PP0102
22	I/O	PJ0	47	I/O	$\overline{SCK0}$	72	0	PE6/DAB0	97	0	PA1/PP0001/PP0101
23	I/O	PD7	48	I/O	PF7/AN11	73	0	PE5/DAA1	98	0	PA0/PP0000/PP0100
24	I/O	PD6	49	I/O	PF6/AN10	74	0	PE4/DAA0	99	0	PB7/PP0015
25	I/O	PD5	50	I/O	PF5/AN9	75	0	PE3/PWM1	100	0	PB6/PP0014

INPUT
AN0 – AN11 ; A-D CONVERTOR'S ANALOG INPUTS
CFG ; CAPSTAN FG INPUT
CS0 ; SERIAL INTERFACE CHANNLE 0 SELECT INPUT
DPG,DFG ; DURM PG AND FG INPUTS
EC ; EVENT CONTROL INPUT FOR TIMER/COUNTER
EXI0,EXI1 ; FRC CAPTURE UNIT'S EXTERNAL INPUTS
EXTAL ; CRYSTAL CONNECTION OR EXTERNAL CLOCK INPUT FOR SYSTEM CLOCK GENERATOR
INT0 – INT2 ; INTERRUPT REQUEST INPUTS (FALLING EDGE ACTIVE)
MP ; MICROPROCESSOR MODE INPUT
PBCTL ; PLAYBACK CTL PULSE INPUT
PCK ; PRESCALER'S EXTERNAL CLOCK INPUT
PE0,PE1 ; INPUTS OF PORT E (PE2 – PE7 ; OUTPUTS)
PF0 – PF3 ; INPUTS OF PORT F (PF4 – PF7 ; OUTPUTS)
PG0 – PG7 ; INPUTS OF PORT G
PI0 ; INPUT OF PORT I (PI1 – PI7 ; INPUTS/OUTPUTS)
PK0 ; INPUT OF PORT K
PMI ; INSTRUMENTATION PULSE INPUT OF PULSE MEASURE UNIT
PMSK ; INSTRUMENTATION ENABLE INPUT OF PULSE MEASURE UNIT
SI0,SI1 ; SERIAL DATA INPUTS (CHANNLE 0 AND CHANNLE 1)
SYNC0,SYNC1 ; COMPOSITE SYNC SIGNAL INPUTS

OUTPUT
DAA0,DAB0 ; DA GATE PULSE OUTPUTS (12 BITS PWM CHANNLE 0)
DAA1,DAB1 ; DA GATE PULSE OUTPUTS (12 BITS PWM CHANNLE 1)
PA0 – PA7 ; OUTPUTS OF PORT A
PB0 – PB7 ; OUTPUTS OF PORT B
PE2 – PE7 ; OUTPUTS OF PORT E (PE0, PE1 ; INPUTS)
PF4 – PF7 ; OUTPUTS OF PORT F (PF0 – PF3 ; INPUTS)
PH0 – PH7 ; OUTPUTS OF PORT H (N-CH OPEN DRAIN OUTPUTS)
PP0000 – PP0018,PP0100 – PP0107,PP0112,PP0113 ; PROGRAMMABLE PATTERN GENERATOR OUTPUS
PO ; PRESCALER OUTPUT
PWM ; PULSE WIDTH MODULATION OUTPUT
PWM0,PWM1 ; 12 BITS PULSE WIDTH MODULATION OUTPUTS (CHANNLE 0 AND CHANNLE 1)
RTO3 – RTO7 ; REALTIME PULSE GENERATOR OUTPUTS
SO0,SO1 ; SERIAL DATA OUTPUTS (CHANNLE 0 AND CHANNLE 1)
TO ; TIMER/COUNTER OUTPUT (DUTY 50 %)
XTAL ; CRYSTAL CONNECTION

INPUT/OUTPUT
PC0 – PC7 ; INPUTS/OUTPUTS OF PROT C (BIT PROGRAMMABLE)
PD0 – PD7 ; INPUTS/OUTPUTS OF PROT D (4 BITS PROGRAMMABLE)
PI1 – PI7 ; INPUTS/OUTPUTS OF PROT I (BIT PROGRAMMABLE, PI0 ; INPUT)
PJ0 – PJ7 ; INPUTS/OUTPUTS OF PROT J (BIT PROGRAMMABLE)
RST ; SYSTEM RESET INPUT AND POWER ON RESET OUTPUT
SCK0,SCK1 ; SERIAL CLOCK INPUTS/OUTPUTS (CHANNLE 0 AND CHANNLE 1)

OTHER
AGND ; A-D CONVERTOR'S GROUND
AV_{DD} (+ 5V) ; A-D CONVERTOR'S V_{DD}
AV_{REF} ; A-D CONVERTOR'S REFERENCE VOLTAGE INPUT

HA118162NT (HITACHI)

VTR PRE/REC AMP
– TOP VIEW –

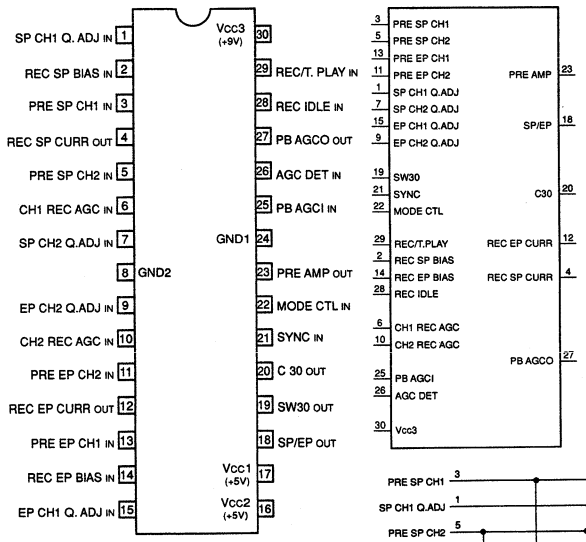

Vcc1 ; MAIN VOLTAGE
Vcc2 ; CASCODE AMP VOLTAGE
Vcc3 ; RECODE VOLTAGE
GND1 ; MAIN GND
GND2 ; CASCODE AMP GND

INPUT
AGC DET ; AUTO GAIN CONTROL DETECT
CH1 REC AGC ; RECODE AUTO GAIN CINTROL (CHANNEL 1 CURRENT DETECT)
CH2 REC AGC ; RECODE AUTO GAIN CINTROL (CHANNEL 2 CURRENT DETECT)
EP CH1 Q.ADJ ; Q ADJUST (EP MODE PREAMPLIFIER CHANNEL 1)
EP CH2 Q.ADJ ; Q ADJUST (EP MODE PREAMPLIFIER CHANNEL 2)
MODE CTL ; MODE CONTROL
PB AGCI ; PLAYBACK FM AUTO GAIN CONTROL
PRE EP CH1 ; EP MODE PREAMPLIFIER CHANNEL 1
PRE EP CH2 ; EP MODE PREAMPLIFIER CHANNEL 2
PRE SP CH1 ; SP MODE PREAMPLIFIER CHANNEL 1
PRE SP CH2 ; SP MODE PREAMPLIFIER CHANNEL 2
REC EP BIAS ; EP MODE RECODE BIAS
REC IDLE ; RECODE IDLE CURRENT ADJUST
REC SP BIAS ; SP MODE RECODE BIAS
REC/T.PLAY ; Y AND CHROMA/TRICK PLAY
SP CH1 Q.ADJ ; Q ADJUST (SP MODE PREAMPLIFIER CHANNEL 1)
SP CH2 Q.ADJ ; Q ADJUST (SP MODE PREAMPLIFIER CHANNEL 2)
SW30 ; SWITCH 30
SYNC ; SYNC (RECODE MUTE)

OUTPUT
C 30 ; CHROMA 30
PB AGCO ; PLAYBACK FM AUTO GAIN CONTROL
PRE AMP ; PREAMPLIFIER
REC EP CURR ; EP MODE RECODE CURRENT
REC SP CURR ; SP MODE RECODE CURRENT
SP/EP ; SP/EP MODE (COMPOSITE VIDEO)

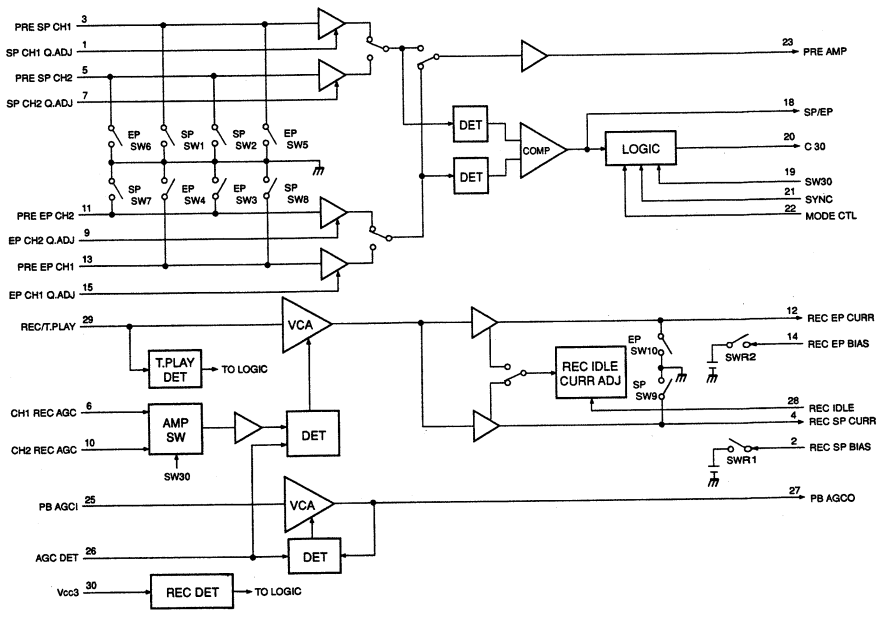

LC74760M (SANYO) FLAT PACKAGE

C-MOS ON SCREEN DISPLAY
– TOP VIEW –

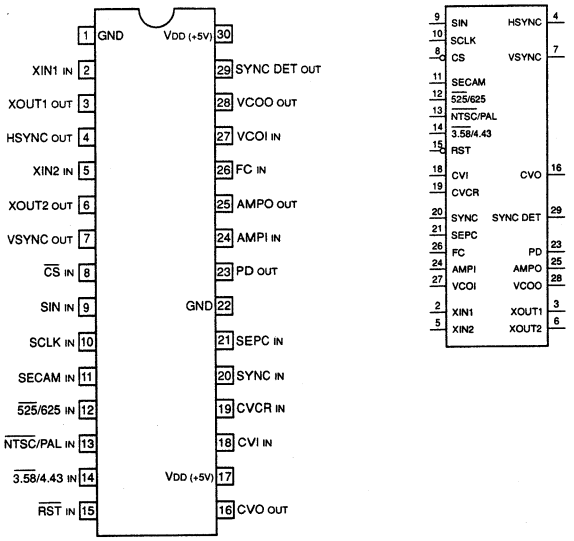

INPUT

3.58/4.43	; 3.58MHz/4.43MHz SELECT (L:3.58/H:4.43)
525/625	; 525 LINES/625 LINES SELECT (L:525/H:625)
AMPI	; FILTER CONNECT TERMINAL FOR AFC CIRCUIT
CS	; CHIP SELECT ENABLE
CVCR	; CHROMA SIGNAL FOR SECAM
CVI	; COMPOSITE VIDEO SIGNAL
FC	; AFC CONTROL VOLTAGE
NTSC/PAL	; NTSC/PAL SELECT (L:NTSC/H:PAL)
RST	; SYSTEM RESET (ACTIVE:L)
SCLK	; CLOCK FOR SERIAL DATA
SECAM	; SECAM MODE SELECT (L:EXCEPT SECAM/H:SECAM)
SEPC	; INTERNAL SYNC SEPARATE CIRCUIT ADJUSTMENT
SIN	; SERIAL DATA
SYNC	; INTERNAL SYNC SEPARATE CIRCUIT OF VIDEO SIGNAL
VCOI	; COIL AND CAPACITOR OSCILLATOR FOR VCO
XIN1	; CRYSTAL OSCILLATOR FOR INTERNAL SYNC GENERATOR (NTSC 4fsc=14.318MHz)
XIN2	; CRYSTAL OSCILLATOR FOR INTERNAL SYNC GENERATOR (PAL 4fsc=17.734MHz)

OUTPUT

AMPO	; FILTER CONNECT TERMINAL FOR AFC CIRCUIT
CVO	; COMPOSITE VIDEO SIGNAL
HSYNC	; HORIZONTAL SYNC
PD	; AFC CONTROL VOLTAGE
SYNC DET	; EXTERNAL SYNC SIGNAL DETECT
VCOO	; COIL AND CAPACITOR OSCILLATOR FOR VCO
VSYNC	; VERTICAL SYNC
XOUT1	; CRYSTAL OSCILLATOR FOR INTERNAL SYNC GENERATOR (NTSC 4fsc=14.318MHz)
XOUT2	; CRYSTAL OSCILLATOR FOR INTERNAL SYNC GENERATOR (PAL 4fsc=17.734MHz)

LM1881M (NS) FLAT PACKAGE

VIDEO SYNC SEPARATOR
– TOP VIEW –

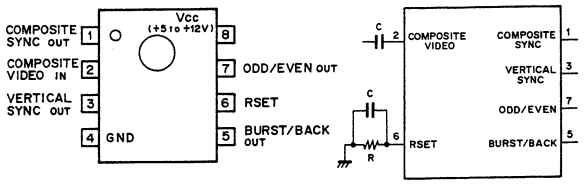

TIMING CHART

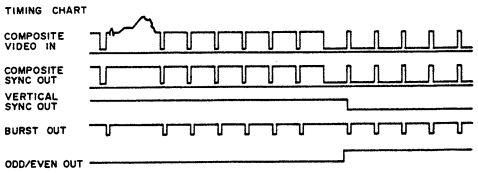

LM311P (TI)

VOLTAGE COMPARATOR WITH STROBE
– TOP VIEW –

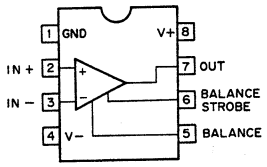

LM324N (TI)

QUAD OPERATIOAL AMPLIFIERS
– TOP VIEW –

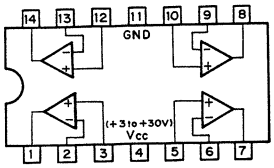

LM339N (TI)

QUAD COMPARATORS
– TOP VIEW –

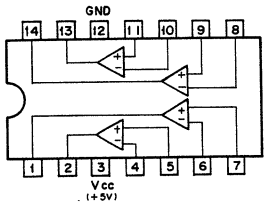

LM358P (TI)

DUAL OPERATIONAL AMPLIFIERS
– TOP VIEW –

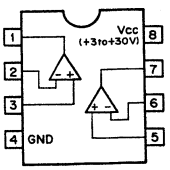

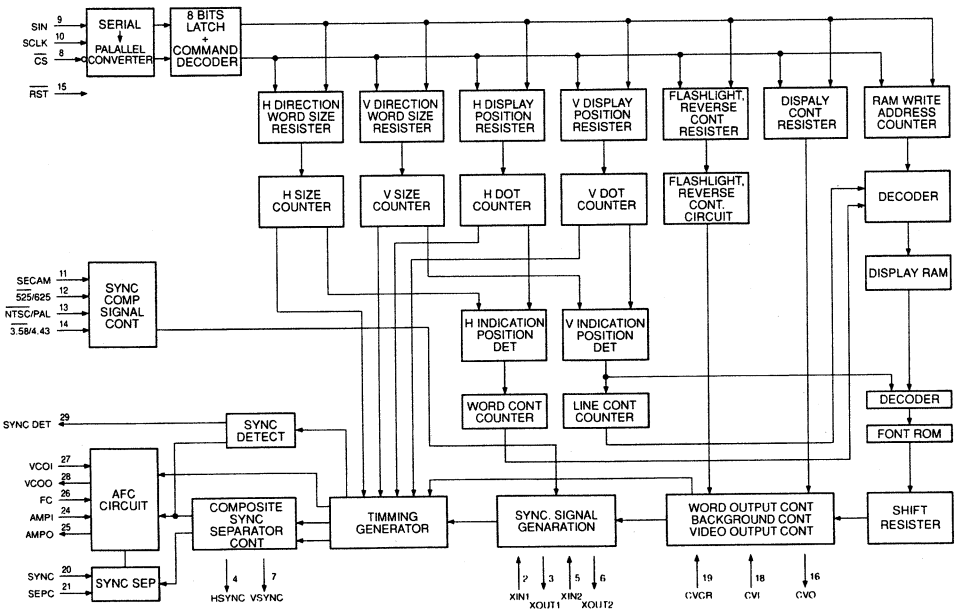

M52350FP (MITSUBISHI)

COLOR PROCESSOR

– TOP VIEW –

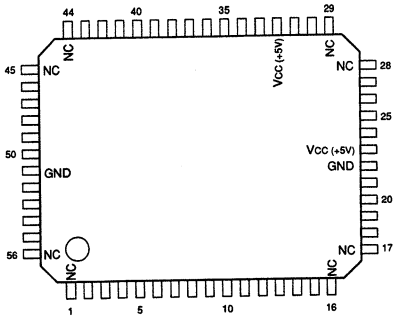

(Vcc=+5V)

PIN No.	I/O	SIGNAL	PIN No.	I/O	SIGNAL	PIN No.	I/O	SIGNAL	PIN No.	I/O	SIGNAL
1	—	NC	15	I	MOD2	29	—	NC	43	O	DIGO1
2	I	YLPF	16	—	NC	30	I	SETUP	44	—	NC
3	I	DETCONT	17	—	NC	31	I	YIN2	45	—	NC
4	I	YIN1	18	O	DIFF2	32	—	Vcc	46	I	DIGI1
5	I	SLICE	19	I	MOD1	33	I	CSYNC	47	I	CNCFC1
6	I	HHK	20	O	DIFF1	34	I	VGP	48	I	CNCFC2
7	I	BGPW	21	I	CAICONT	35	I	HGP	49	O	DIGO2
8	I	BGPP	22	—	GND	36	I	HSW	50	I	DIGI2
9	O	PULSE	23	—	Vcc	37	I	CIN	51	—	GND
10	I	CCONT	24	I	FSC	38	I	PAL/NT	52	I	OFFSET1
11	I	SCCONT	25	I	STCONT	39	I	CAIBIAS	53	I	OFFSET2
12	O	COUT	26	I	TCONT	40	I	DLYCONT	54	I	OFFSET3
13	I	CARI2	27	O	YOUT	41	I	CLPF	55	I	OFFSET4
14	I	CARI1	28	—	NC	42	I	CDLY	56	—	NC

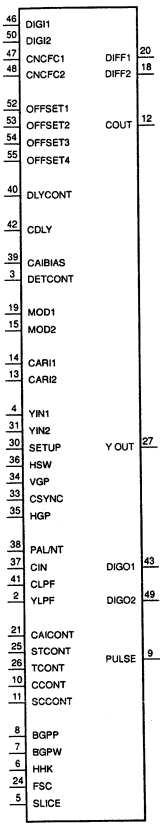

INPUT

BGPP	; BURST GATE PULSE POSITION ADJUSTMENT
BGPW	; BURST GATE PULSE WIDTH ADJUSTMENT
CAIBIAS	; CAI BIAS
CAICONT	; CAI LEVEL CONTROL
CARI1, 2	; CARRIER BALANCE ADJUSTMENT
CCONT	; COLOR CONTROL
CDLY	; CHROMA DELAY ADJUSTMENT
CIN	; CHROMA SIGNAL
CLPF	; CHROMA LPF ADJUSTMENT
CNCFC1, 2	; COLOR NOISE CANCEL FILTER
CSYNC	; SYNC FOR SETUP GATE PULSE GENERATOR
DETCONT	; Y AND C COMPOSITE RATIO ADJUSTMENT OF 2nd DIFFERENTIAL COMPONENT
DIGI1, 2	; COLOR PROCESSED COLOR DIFFERENCE SIGNAL
DLYCONT	; DELAY CONTROL
FSC	; MODULATION/DEMODULATION REFERENCE
HGP	; CONSTANT FOR HORIZONTAL GATE PULSE GENERATOR
HHK	; CONSTANT FOR HALF HORIZONTAL PULSE GENERATOR
HSW	; HEAD SWITCH PULSE FOR VERTICAL GATE PULSE GENERATOR
MOD1, 2	; MODULATOR
OFFSET1-4	; INTERNAL FILTER DC OFFSET CANCEL
PAL/NT	; L:NTSC/H:PAL MODE CONTROL
SCCONT	; SUB-COLOR CONTROL
SETUP	; Y SETUP CONTROL
SLICE	; CONSTANT FOR PULSE GENERATOR
STCONT	; SUB TINT CONTROL
TCONT	; TINT CONTROL
VGP	; CONSTANT FOR VERTICAL GATE PULSE GENERATOR
YIN1	; Y SIGNAL FOR Y EDGE TIMING PULSE GENERATOR
YIN2	; SETUP Y SIGNAL
YLPF	; Y LPF ADJUSTMENT

OUTPUT

COUT	; CHROMA SIGNAL
DIFF1, 2	; COLOR PROCESSED COLOR DIFFERENCE SIGNAL
DIGO1, 2	; DEMODULATOR OUT COLOR DIFFERENCE SIGNAL
PULSE	; PULSE
YOUT	; PROCESSED Y SIGNAL

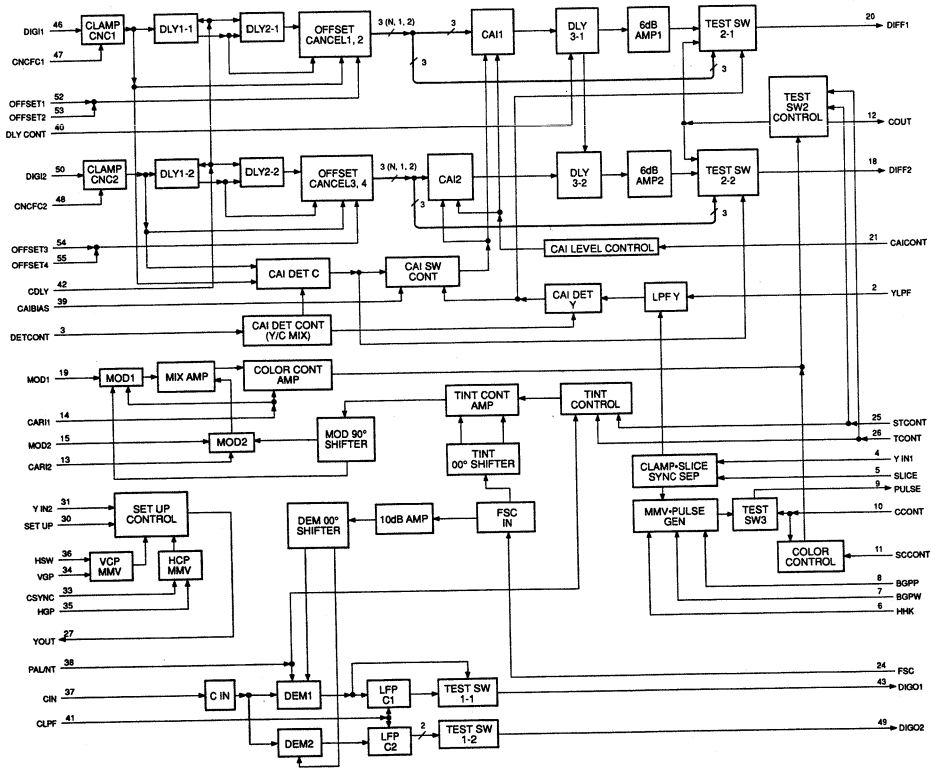

PIN NO.	I/O	SYMBOL	PIN NO.	I/O	SYMBOL	PIN NO.	I/O	SYMBOL	PIN NO.	I/O	SYMBOL
1	–	GND	31	–	GND	61	–	GND	91	–	GND
2	I	RCK1	32	O	HCL0	62	I	WSYS	92	I/O	ED4
3	I	REVN	33	O	INC0	63	I	EVMT	93	I/O	ED3
4	O	RUV0	34	O	VCL0	64	I	XWE	94	I/O	ED2
5	O	RUV1	35	O	XMWE	65	O	SYT	95	I/O	ED1
6	O	RCDT	36	O	PSA3	66	I	TDS	96	I/O	ED0
7	O	BDR	37	O	PSA2	67	I	TSH	97	I	SD1
8	O	RVMT	38	O	PSA1	68	I	TSV	98	I	SCK
9	O	BNS0	39	O	PSA0	69	O	JOG	99	I	XCE
10	O	BNS1	40	O	VCL1	70	I	WEVN	100	O	OPT0
11	O	HBD0	41	O	INC1	71	I	AFH	101	O	OPT1
12	O	HBD1	42	O	HCL1	72	I	VD	102	O	OPT2
13	O	HBD2	43	O	CEV1	73	I	ESYN	103	O	OPT3
14	–	VDD (+5V)	44	–	VDD (+5V)	74	–	VDD (+5V)	104	–	VDD (+5V)
15	–	GND	45	–	GND	75	–	GND	105	–	GND
16	O	HBD3	46	O	CEV0	76	I	EEVN	106	I	XCLR
17	O	HPR0	47	O	YEV2	77	I	EAFH	107	I	RSYS
18	O	HPR1	48	O	YEV1	78	I	EVD	108	I	EPAL
19	O	HPR2	49	O	YEV0	79	I	EPVD	109	I	ADC
20	O	YTIM	50	O	WUV1	80	I/O	EA7	110	O	PPT
21	O	RSYC	51	O	WUV0	81	I/O	EA6	111	I	TRV
22	O	BDL	52	O	WCDT	82	I/O	EA5	112	I	TRH
23	O	PALP	53	O	WVMT	83	I/O	EA4	113	I	WIND
24	O	HCL2	54	O	FNR	84	I/O	EA3	114	O	VPER
25	O	YINC	55	I	ACK	85	I/O	EA2	115	I	OPI
26	O	VCL2	56	I	TWH	86	I/O	EA1	116	O	OPO
27	O	CINC	57	I	TWV	87	I/O	EA0	117	I	XIN
28	O	MYCK	58	I	MSCK	88	I/O	ED7	118	O	XOUT
29	O	MCCK	59	O	DWCK	89	I/O	ED6	119	O	RCKO
30	I	TST	60	I	WCKI	90	I/O	ED5	120	O	DRCK

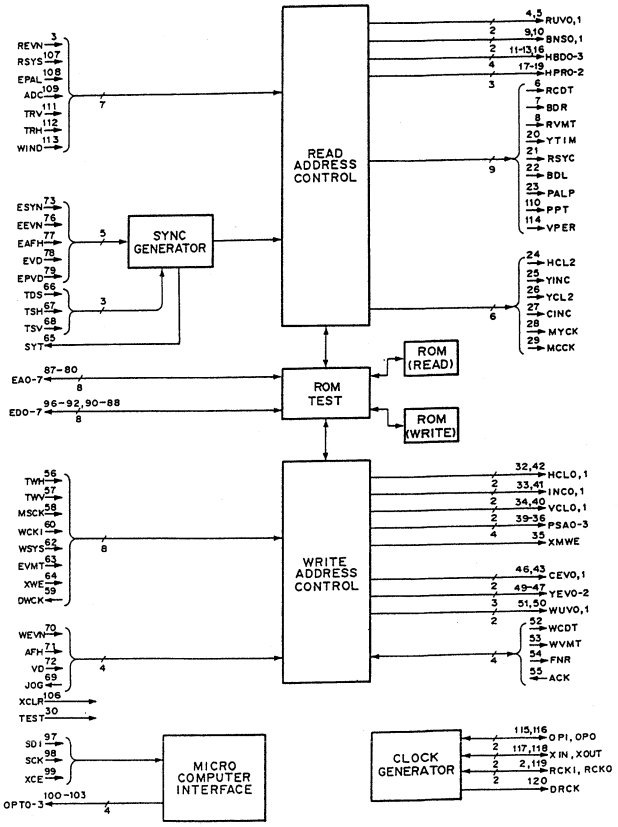

INPUT

ACK	; CLOCK INPUT FOR APC (H : B/W MODE, L : COLOR MODE)
ADC	; CHROMA ADDRESS CONTROL INPUT
AFH	; AFC H DRIVE INPUT
EAFH	; EXTERNAL SYNC MODE H DRIVE INPUT
EEVN	; EXTERNAL SYNC MODE EVEN/ODD SELECT INPUT
EPAL	; EXTERNAL SYNC MODE PAL COLOR ID INPUT
EPVD	; REFERENCE VD
ESYN	; EXTERNAL SYNC MODE CHROMA SYNC INPUT
EVD	; EXTERNAL SYNC MODE V DRIVE INPUT
EVMT	; EXTERNAL VIDEO MUTE INPUT (H : MUTE, L : NORMAL)
MSCK	; MASTER CLOCK INPUT
OPI	; INVERTER INPUT
RCKI	; READ CLOCK INPUT
REVN	; READ EVEN/ODD FIELD MONITOR INPUT
RSYS	; READ SYNC SELECT INPUT (H : NTSC, L : PAL)
SCK	; SERIAL CLOCK INPUT
SDI	; SERIAL DATA INPUT
TDS, TRH, TRV, TSH	
TST, TSV, TWH, TWV	
	; TEST PIN
VD	; VERTICAL SYNC DETECT INPUT
WCKI	; WRITE CLOCK INPUT
WEVN	; WRITE EVEN/ODD FIELD MONITOR INPUT
WIND	; WINDOW COMPARATOR INPUT FOR V-PLL
WSYS	; WRITE SYNC SELECT INPUT (H : NTSC, L : PAL)
XCE	; CHIP ENABLE INPUT
XCLR	; DIRECT CLEAR INPUT
XIN	; CLOCK INPUT
XWE	; WRITE ENABLE INPUT

OUTPUT

	BDL	; Y BORDER LEVEL OUTPUT
	BDR	; BORDER OUTPUT
* 1	BNS0, 1	; SOLARIZATION CONROL OUTPUTS
* 2	CEV0, 1	; C NOISE REDUCER MODE SELECT OUTPUTS
	CINC	; READ PORT CHROMA INCREMENT OUTPUT
	DRCK	; DELAYED READ CLOCK OUTPUT
	DWCK	; DELAYED WRITE CLOCK OUTPUT
	FNR	; NOISE REDUCER ON/OFF CONTROL OUTPUT
* 3	HBD0, 1	; U-AXIS BORDER LEVEL OUTPUTS
* 4	HBD2, 3	; V-AXIS BORDER LEVEL OUTPUTS
	HCL0	; WRITE PORT HORIZONTAL CLEAR OUTPUT
	HCL1, 2	; READ PORT HORIZONTAL CLEAR OUTPUTS
* 5	HPR0 – HPR2	; H PROCESS OUTPUTS
	INC0	; WRITE PORT LINE INCREMENT OUTPUT
	INC1	; READ PORT LINE INCREMENT OUTPUT
	JOG	; REFERENCE CONTROL OUTPUT
	MCCK	; READ PORT CHROMA CLOCK OUTPUT
	MYCK	; READ PORT Y CLOCK OUTPUT
	OPO	; INVERTER OUTPUT
	OPT0 – OPT3	; OPTION OUTPUTS
	PALP	; PAL PHASE CONTROL OUTPUT
	PPT	; SMALL PICTURE TIMING OUT
	PSA0 – PSA3	; WRITE PORT TRANSFER SYNC OUTPUTS
	RCDT	; READ FRAIMIG CODE TIMING OUTPUT
	RCK0	; READ CLOCK OUTPUT
	RUV0, 1	; READ U/V TIMING OUTPUTS
	RVMT	; READ MUTING OUTPUT
	SYT	; MONITOR PIN FOR TEST
	VCL0	; WRITE PORT VERTICAL CLEAR OUTPUT
	VCL1, 2	; READ PORT VERTICAL CLEAR OUTPUTS
	VPER	; V PHASE COMPARATOR OUTPUT
	WCDT	; WRITE FRAMING CODE TIMING OUTPUT
	WUV0, 1	; WRITE U/V TIMING OUTPUTS
	WVMT	; WRITE VIDEO MUTE OUTPUT
	XMWE	; WRITE PORT WRITE ENABLE OUTPUT
	XOUT	; CLOCK OUTPUT
* 6	YEV0 – YEV2	; Y NOISE REDUCER MODE SELECT OUTPUTS
	YINC	; READ PORT Y INCREMENT OUTPUT
	YTIM	; Y TIMING CONTROL OUTPUT

INPUT/OUTPUT

EA0 – EA7	; ROM TEST TERMINAL INPUTS/OUTPUTS
ED0 – ED7	; ROM TEST TERMINAL INPUTS/OUTPUTS

* 1 SOLORIZATION RESOLUTION

INPUTS		OUTPUTS				
BNS0	BNS1	RY0	RY1	RY2	RY3	RY4
0	0	0	0	1	X	X
0	1	0	0	0	1	X
1	0	0	0	0	0	1
1	1	X	X	X	X	X

* 2 CHROMA SIGNAL NOISE REDUCER SELECTION

CEV0	CEV1	OPERATION
0	0	NOISE REDUCER (SOFT)
0	1	NOISE REDUCER (MIDDLE)
1	0	NOISE REDUCER (STRONG)
1	1	NO OPERATION

* 3 U-AXIS BORDER LEVEL

HBD1	HBD0	LEVEL
0	0	20 IRE
0	1	– 20 IRE
1	0	– 30 IRE
1	1	0 IRE

* 4 V-AXIS BORDER LEVEL

HBD3	HBD2	LEVEL
0	0	20 IRE
0	1	– 20 IRE
1	0	– 30 IRE
1	1	0 IRE

* 5 H PROCESS MODE SELECTION

HPR2	HPR1	HPR0	OPERATION
0	0	0	V-ENHANCE (SOFT)
0	0	1	V-ENHANCE (SOFT)
0	1	0	V-ENHANCE (MIDDLE)
0	1	1	V-ENHANCE (STRONG)
1	0	0	MIX RATIO Hr:Hp=1:1
1	0	1	MIX RATIO Hr:Hp=1:3
1	1	0	MIX RATIO Hr:Hp=3:1
1	1	1	NO PLAY

0 : LOW LEVEL
1 : HIGH LEVEL

H_T = THROUGH
H_P = 1 H DELAY

* 6 Y SIGNAL NOISE REDUCER SELECTION

YEV0	YEV1	YEV2	OPERATION
0	0	0	NOISE REDUCER (SOFT)
0	0	1	NOISE REDUCER (MIDDLE)
0	1	0	NOISE REDUCER (STRONG)
0	1	1	AFTER IMAGE
1	0	0	VERTICAL FILTER
1	0	1	FADE IN/OUT
1	1	0	SELECT AFTER IMAGE
1	1	1	NO OPERATION

MC14017BF (MOTOROLA) FLAT PACKAGE

C-MOS DECADE COUNTER/DIVIDER
– TOP VIEW –

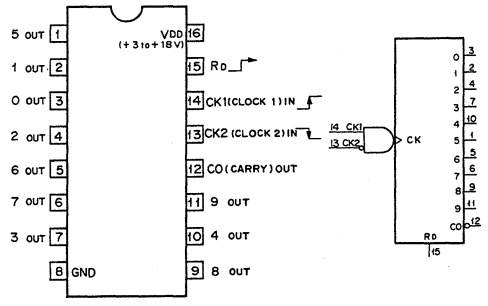

COUNT	INPUTS		OUTPUTS										
	RD	CK=CK1·CK2	9	8	7	6	5	4	3	2	1	0	CO
0	1	X	0	0	0	0	0	0	0	0	0	1	1
0	0	↓	0	0	0	0	0	0	0	0	0	1	1
1	0	↓	0	0	0	0	0	0	0	0	1	0	1
2	0	↓	0	0	0	0	0	0	0	1	0	0	1
3	0	↓	0	0	0	0	0	0	1	0	0	0	1
4	0	↓	0	0	0	0	0	1	0	0	0	0	1
5	0	↓	0	0	0	0	1	0	0	0	0	0	0
6	0	↓	0	0	0	1	0	0	0	0	0	0	0
7	0	↓	0	0	1	0	0	0	0	0	0	0	0
8	0	↓	0	1	0	0	0	0	0	0	0	0	0
9	0	↓	1	0	0	0	0	0	0	0	0	0	0
NO COUNT	0	1	NO CHANGE										
	0	0											

0 ; LOW LEVEL
1 ; HIGH LEVEL
X ; DON'T CARE

MC14046BF (MOTOROLA) FLAT PACKAGE

C-MOS PHASE LOCKED LOOP
– TOP VIEW –

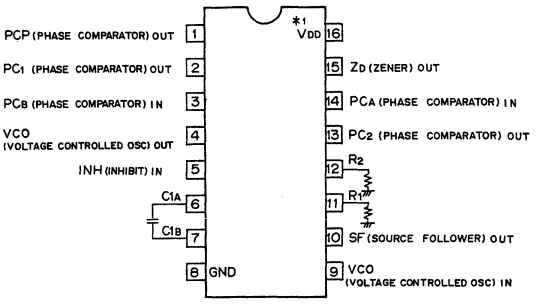

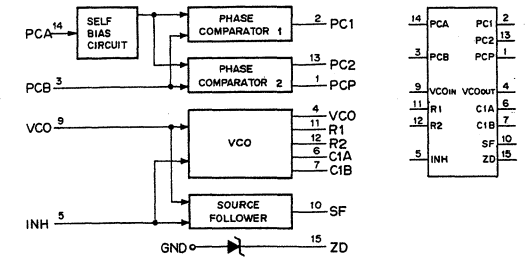

*1

TYPE	VDD
CD4046BE HD14046BP MC14046BCP MC14046BF TC4046BP	+3 to +8V
MC74HC4046AF MC74HC4046AN	+2 to +6V

MC14052BF (MOTOROLA) FLAT PACKAGE

C-MOS DUAL 4-CHANNEL ANALOG MULTIPLEXERS/DEMULTIPLEXERS
– TOP VIEW –

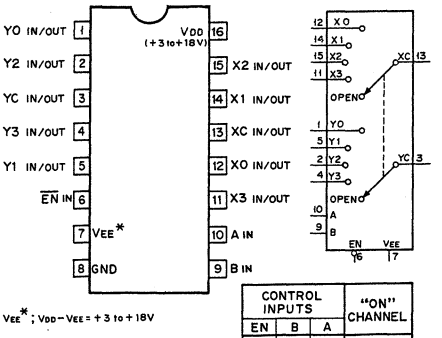

VEE* ; VDD – VEE = +3 to +18V

CONTROL INPUTS			"ON" CHANNEL
EN	B	A	
0	0	0	0
0	0	1	1
0	1	0	2
0	1	1	3
1	X	X	OPEN

0 ; LOW LEVEL
1 ; HIGH LEVEL
X ; DON'T CARE.

MC14053BCP (MOTOROLA)
MC14053BF (MOTOROLA) FLAT PACKAGE

C-MOS TRIPLE 2-CHANNEL ANALOG MULTIPLEXERS/DEMULTIPLEXERS
– TOP VIEW –

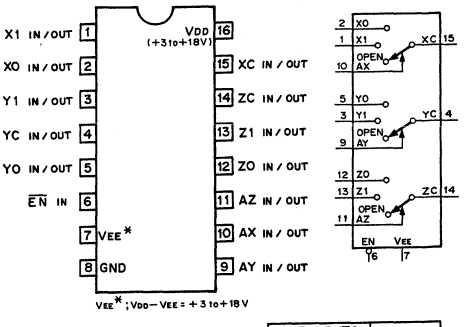

VEE* ; VDD – VEE = +3 to +18V

CONT. INPUTS		ON CHANNEL
EN	A (X,Y,Z,)	
0	0	0
0	1	1
1	X	OPEN

0 ; LOW LEVEL
1 ; HIGH LEVEL
X ; DON'T CARE.

MC14070BCP (MOTOROLA)
MC14070BF (MOTOROLA) FLAT PACKAGE

C-MOS QUAD EXCLUSIVE OR GATES
– TOP VIEW –

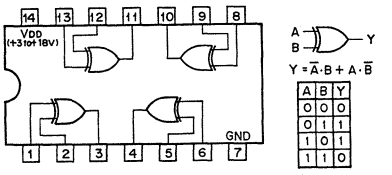

$Y = \overline{A} \cdot B + A \cdot \overline{B}$

A	B	Y
0	0	0
0	1	1
1	0	1
1	1	0

0; LOW LEVEL
1; HIGH LEVEL

NJM2903D (JRC)
NJM2903M (JRC) FLAT PACKAGE
DUAL VOLTAGE COMPARATORS
– TOP VIEW –

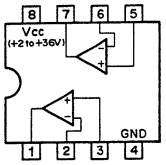

NJM360M (JRC) FLAT PACKAGE
HIGH SPEED VOLTAGE COMPARATOR
(TTL OUTPUT)
– TOP VIEW –

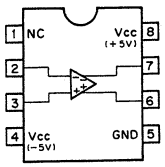

S-8054HNM (SEIKO I AND E) 4.50V – 4.70V
C-MOS VOLTAGE DETECTOR

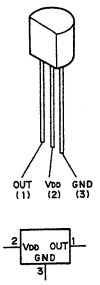

NJM4558M (JRC) FLAT PACKAGE
NJM4560D (JRC)
NJM4560M (JRC) FLAT PACKAGE
NJM5532M (JRC) FLAT PACKAGE
DUAL OPERATIONAL AMPLIFIER
– TOP VIEW –

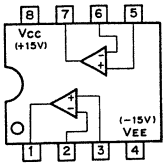

NJM4580E (JRC) FLAT PACKAGE
OPERATIONAL AMPLIFIER
– TOP VIEW –

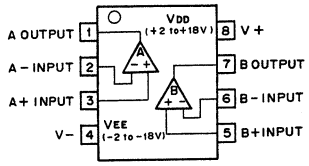

SN74HC00ANS (TI) FLAT PACKAGE
C-MOS QUAD 2-INPUT NAND GATES
– TOP VIEW –

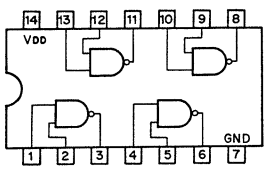

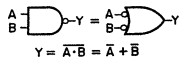

A	B	Y
0	0	1
0	1	1
1	0	1
1	1	0

0; LOW LEVEL
1; HIGH LEVEL

NOTE :

TYPE	VDD
TC74AC00 TYPE TC74VHC00	+2 to +5.5V
MC74HCT00N	+5V
74ACT00 TYPE	+4.5 to +5.5V
OTHER TYPES	+2 to +6V

NJM78L05UA (JRC) + 5 V (100 mA)
POSITIVE VOLTAGE REGULATOR
– SIDE VIEW –

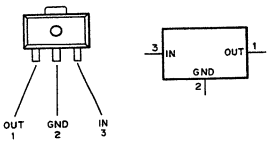

NJM79L05UA (JRC) – 5V (100 mA)
NJM79L09UA (JRC) – 9V (100 mA)
VOLTAGE REGULATOR

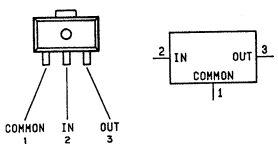

SN74HC02ANS (TI) FLAT PACKAGE
C-MOS QUAD 2-INPUT NOR GATES
– TOP VIEW –

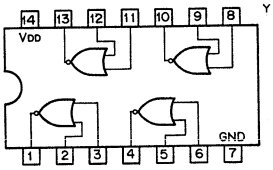

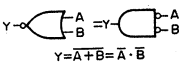

A	B	Y
0	0	1
0	1	0
1	0	0
1	1	0

0:LOW LEVEL
1;HIGH LEVEL

NOTE :

TYPE	VDD
HC	+2 to +6V
AC/VHC	+2 to +5.5V
HCT/ACT	+5V

PA0009 (PIONEER)
SIGNAL SEPARATOR
– TOP VIEW –

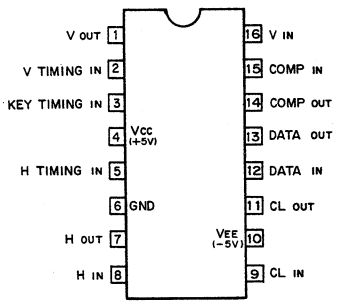

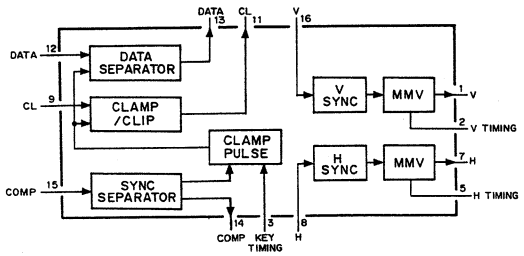

SN74HC04ANS (TI) FLAT PACKAGE
C-MOS HEX INVERTERS
– TOP VIEW –

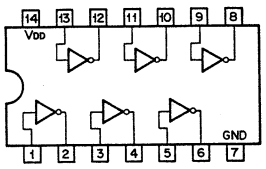

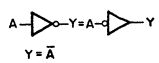

A	Y
0	1
1	0

0 ; LOW LEVEL
1 ; HIGH LEVEL

NOTE :

TYPE	VDD
74HCT04 TYPE	+ 5V
TC74AC04 TYPE TC74VHC04 TYPE	+ 2 to + 5.5V
74ACT04 TYPE	+ 4.5 to + 5.5V
OTHER TYPES	+ 2 to + 6V

SN74HC165ANS (TI) FLAT PACKAGE

C-MOS SERIAL- OR PARALLEL-INPUT SHIFT REGISTER
– TOP VIEW –

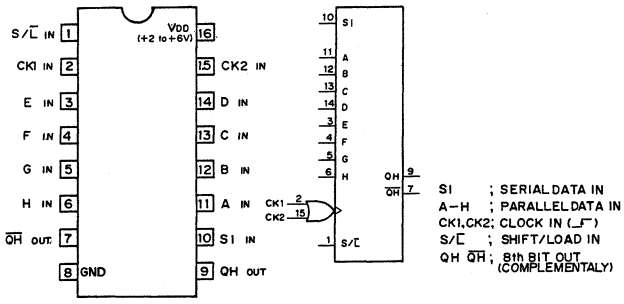

INPUTS				CONTENTS		OUTPUT	OPERATION
S/L	CK1+CK2	SI	A·····H	QA	QB····	QH	
0	X	X	a·····h	a	b·····	h	PARALLEL LOAD
1	┌_	0	X	0	QAo···	QGo	RIGHT SHIFT
1	┌_	1	X	1	QAo···	QGo	
1	_┐	X	X	QAo	QBo···	QHo	NO COUNT
1	0	X	X	QAo	QBo···	QHo	
1	1	X	X	QAo	QBo···	QHo	

0 ; LOW LEVEL 1 ; HIGH LEVEL X ; DON'T CARE
a – h ; LEVEL OF INPUTS A–H
QAo–QHo ; LEVEL OF QA–QH BEFORE THE INDICATED INPUT CONDITIONS WERE ESTABLISHED

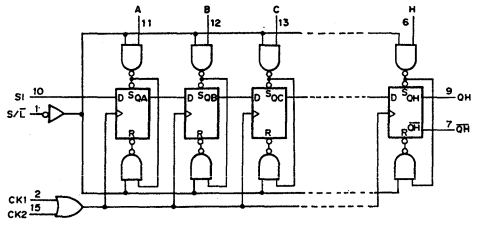

SN74HC273ANS (TI) FLAT PACKAGE

C-MOS OCTAL D-TYPE FLIP-FLOPS WITH RESET
– TOP VIEW –

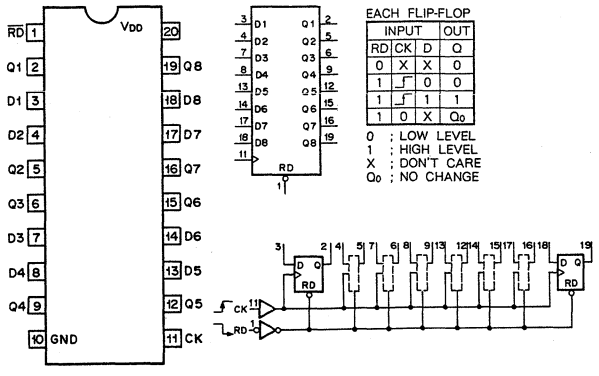

EACH FLIP-FLOP

INPUT			OUT
RD	CK	D	Q
0	X	X	0
1	┌_	0	0
1	┌_	1	1
1	0	X	Q_0

0 ; LOW LEVEL
1 ; HIGH LEVEL
X ; DON'T CARE
Q_0 ; NO CHANGE

NOTE :

TYPE	VDD
AC HC	+2 to +6V
VHC	+2 to +5.5V

SN74HC32ANS (TI) FLAT PACKAGE

C-MOS QUAD 2-INPUT OR GATES
– TOP VIEW –

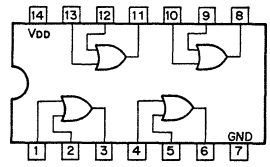

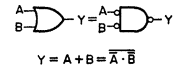

A	B	Y
0	0	0
0	1	1
1	0	1
1	1	1

0 ; LOW LEVEL
1 ; HIGH LEVEL

NOTE :

TYPE	VDD
AC/VHC	+2 to +5.5V
HC	+2 to +6V

SN74HC393ANS (TI) FLAT PACKAGE

C-MOS DUAL 4-BIT BINARY COUNTER
– TOP VIEW –

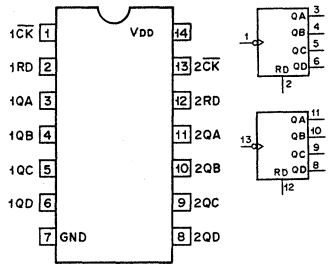

COUNT SEQUENCE

COUNT	QD	QC	QB	QA
0	0	0	0	0
1	0	0	0	1
2	0	0	1	0
3	0	0	1	1
4	0	1	0	0
5	0	1	0	1
6	0	1	1	0
7	0	1	1	1
8	1	0	0	0
9	1	0	0	1
10	1	0	1	0
11	1	0	1	1
12	1	1	0	0
13	1	1	0	1
14	1	1	1	0
15	1	1	1	1

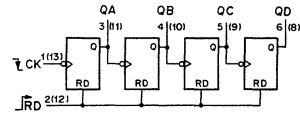

RESET/COUNT FUNCTION

RD	QD	QC	QB	QA
1	0	0	0	0
0	COUNT			

0 ; LOW LEVEL
1 ; HIGH LEVEL

NOTE :

TYPE	VDD
AC/VHC	+2 to +5.5V
HC	+2 to +6V

SN74HC74ANS (TI) FLAT PACKAGE

C-MOS DUAL D-TYPE FLIP-FLOPS WITH DIRECT SET/RESET
– TOP VIEW –

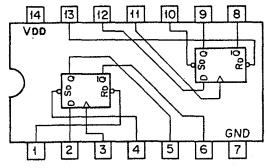

INPUTS				OUTPUTS	
$\overline{Sd}$	$\overline{Rd}$	CK	D	Qn+1	$\overline{Qn+1}$
0	1	X	X	1	0
1	0	X	X	0	1
0	0	X	X	1*	1*
1	1	┌_	1	1	0
1	1	┌_	0	0	1
1	1	0	X	Qn	$\overline{Qn}$

0 ; LOW LEVEL
1 ; HIGH LEVEL
X ; DON'T CARE

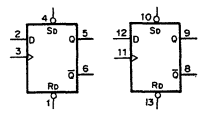

NOTE :

TYPE	VDD
HCT/ACT	+5V
TC74AC/VHC	+2 to +5.5V
OTHERS	+2 to +6V

TC74HC123AF (TOSHIBA) FLAT PACKAGE

C-MOS DUAL RETRIGGERABLE MONOSTABLE MULTIVIBRATORS
– TOP VIEW –

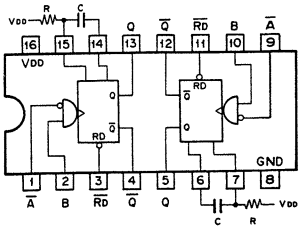

INPUT			OUTPUT	
RD	A	B	Q	Q̄
0	X	X	0	1
1	1	X	0	1
1	X	0	0	1
1	0	↑	⊓	⊔
1	↓	1	⊓	⊔
↓	0	1	⊓	⊔

0 ; LOW LEVEL
1 ; HIGH LEVEL
X ; DON'T CARE

OUTPUT PULSE WIDTH = 0.46CR

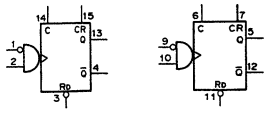

NOTE :

TYPE	VDD
TC74HCT123AF	+5V
OTHER TYPES	+2 to +6V

TC74HC221AF (TOSHIBA) FLAT PACKAGE

C-MOS MONOSTABLE MULTIVIBRATOR WITH SCHMITT TRIGGER INPUT
– TOP VIEW –

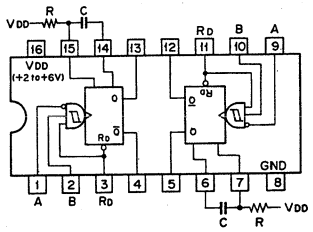

INPUTS			OUTPUTS	
RD	A	B	Q	Q̄
0	X	X	0	1
X	1	X	0	1
X	X	0	0	1
1	0	↑	⊓	⊔
1	↓	1	⊓	⊔
↑	0	1	⊓	⊔

0 ; LOW LEVEL
1 ; HIGH LEVEL
X ; DON'T CARE

OUTPUT PULSE WIDTH = 0.7CR

TC74HC4053AF (TOSHIBA) FLAT PACKAGE

C-MOS TRIPLE 2-CHANNEL ANALOG MULTIPLEXER/DEMULTIPLEXER
– TOP VIEW –

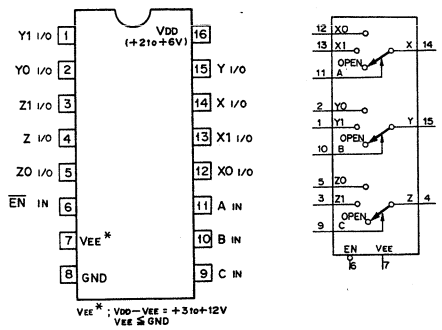

CONTROL INPUTS				ON CHANNEL		
EN	SELECT					
	C	B	A			
0	0	0	0	Z0	Y0	X0
0	0	0	1	Z0	Y0	X1
0	0	1	0	Z0	Y1	X0
0	0	1	1	Z0	Y1	X1
0	1	0	0	Z1	Y0	X0
0	1	0	1	Z1	Y0	X1
0	1	1	0	Z1	Y1	X0
0	1	1	1	Z1	Y1	X1
1	X	X	X	OPEN		

0 ; LOW LEVEL
1 ; HIGH LEVEL
X ; DON'T CARE

TC7S02F (TOSHIBA) CHIP PACKAGE

C-MOS 2-INPUT NOR GATE

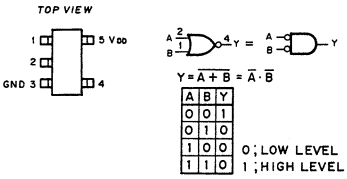

A	B	Y
0	0	1
0	1	0
1	0	0
1	1	0

0 ; LOW LEVEL
1 ; HIGH LEVEL

TYPE	VDD
4S01F	+3 to +18V
7S02F	+2 to +6V
7S02FU	

TC7S08F (TOSHIBA) CHIP PACKAGE

C-MOS 2-INPUT AND GATE

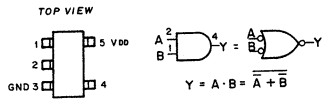

A	B	Y
0	0	0
0	1	0
1	0	0
1	1	1

0 ; LOW LEVEL
1 ; HIGH LEVEL

TYPE	VDD
7S08F 7S08FU	+2 to +6V
4S81F 14S81F	+3 to +18V
7SH08FU	−2 to +5.5V

TC7W74F (TOSHIBA) CHIP PACKAGE

C-MOS D-TYPE FLIP-FLOPS WITH DIRECT SET/RESET
– TOP VIEW –

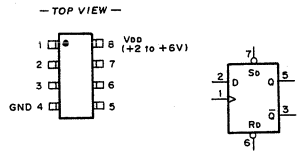

INPUTS				OUTPUTS	
SD	RD	CK	D	Qn+1	Q̄n+1
0	1	X	X	1	0
1	0	X	X	0	1
0	0	X	X	1	1
1	1	⊓	1	1	0
1	1	⊓	0	0	1
1	1	⊔	X	Qn	Q̄n

0 ; LOW LEVEL
1 ; HIGH LEVEL
X ; DON'T CARE

TL062CPS (TI) FLAT PACKAGE
TL082CPS (TI) FLAT PACKAGE

OPERATIONAL AMPLIFIER
(J FET INPUT)
– TOP VIEW –

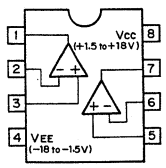

UPC1037HA (NEC)

DOUBLE-BALANCED MODULATOR
– SIDE VIEW –

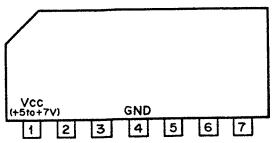

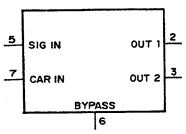

UPC78L05J (NEC) + 5V (100mA)

POSITIVE VOLTAGE REGULATOR

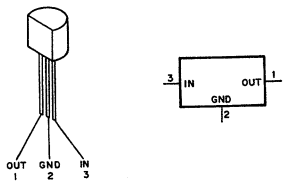

UPD78044GF (NEC)

C-MOS 8-BIT MICROCOMPUTER

– TOP VIEW –

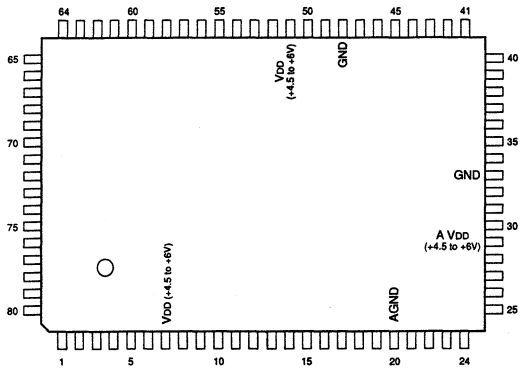

(AVDD=VDD=+4.5 to +6V)

PIN No.	I/O	SIGNAL	PIN No.	I/O	SIGNAL	PIN No.	I/O	SIGNAL	PIN No.	I/O	SIGNAL
1	O	P94/FIP6	21	I/O	P17/ANI7	41	I/O	P32/TO2	61	I/O	P117/FIP25
2	O	P93/FIP5	22	I/O	P16/ANI6	42	I/O	P31/TO1	62	I/O	P116/FIP24
3	O	P92/FIP4	23	I/O	P15/ANI5	43	I/O	P30/TO0	63	I/O	P115/FIP23
4	O	P91/FIP3	24	I/O	P14/ANI4	44	I/O	PO3/INTP3/CI0	64	I/O	P114/FIP22
5	O	P90/FIP2	25	I/O	P13/ANI3	45	I/O	PO2/INTP2	65	I/O	P113/FIP21
6	O	P81/FIP1	26	I/O	P12/ANI2	46	I/O	PO1/INTP1	66	I/O	P112/FIP20
7	O	P80/FIP0	27	I/O	P11/ANI1	47	I	PO0/INTP0/TI0	67	I/O	P111/FIP19
8	—	VDD	28	I/O	P10/ANI0	48	—	GND	68	I/O	P110/FIP18
9	I/O	P27/SCK0	29	—	AVDD	49	I/O	P72	69	O	P107/FIP17
10	I/O	P26/SO0/SB1	30	I	AVREF	50	I/O	P71	70	O	P106/FIP16
11	I/O	P25/SI0/SB0	31	I	P04/XT1	51	I/O	P70	71	—	VLOAD
12	I/O	P24/BUSY	32	I	XT2	52	—	VDD	72	O	P105/FIP15
13	I/O	P23/STB	33	—	GND	53	I/O	P127/FIP33	73	O	P104/FIP14
14	I/O	P22/SCK1	34	I	X1	54	I/O	P126/FIP32	74	O	P103/FIP13
15	I/O	P21/SO1	35	—	X2	55	I/O	P125/FIP31	75	O	P102/FIP12
16	I/O	P20/SI1	36	I/O	P37	56	I/O	P124/FIP30	76	O	P101/FIP11
17	I	RESET	37	I/O	P36/BUZ	57	I/O	P123/FIP29	77	O	P100/FIP10
18	I/O	P74	38	I/O	P35/PCL	58	I/O	P122/FIP28	78	O	P97/FIP9
19	I/O	P73	39	I/O	P34/TI2	59	I/O	P121/FIP27	79	O	P96/FIP8
20	—	AGND	40	I/O	P33/TI1	60	I/O	P120/FIP26	80	O	P95/FIP7

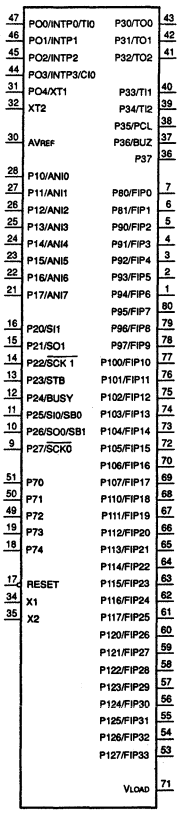

INPUT

ANI0-ANI7	; ANALOG 0-7
AVREF	; ANALOG REFERENCE VOLTAGE
BUSY	; BUSY
CIO	; UP/DOWN COUNTER CLOCK
INTP0-INTP3	; INTERRUPT 0-3
PO0, PO4	; PORT 0
RESET	; RESET
SIO, SI1	; SERIAL DATA 0, 1
TI0-TI2	; TIMER 0-2
X1, X2	; CRYSTAL1, 2 (MAIN SYSTEM CLOCK)
XT1, XT2	; CRYSTAL1, 2 (SUB SYSTEM CLOCK)

OUTPUT

BUZ	; BUZZER CLOCK
FIP0-33	; FLUORESCENT INDICATOR PANEL
P80, P81	; PORT 8
P90-P97	; PORT 9
P100-P107	; PORT10
PCL	; PROGRAMMABLE CLOCK
SO0, SO1	; SERIAL DATA 0, 1
STB	; STROBE
TO0-TO2	; TIMER 0-2

INPUT/OUTPUT

P01-P03	; PORT 0
P10-P17	; PORT 1
P20-P27	; PORT 2
P30-P37	; PORT 3
P70-P74	; PORT 7
P110-P117	; PORT11
P120-P127	; PORT 12
SB0, SB1	; SERIAL DATA 0, 1
SCK0, SCK1	; SERIAL CLOCK 0, 1

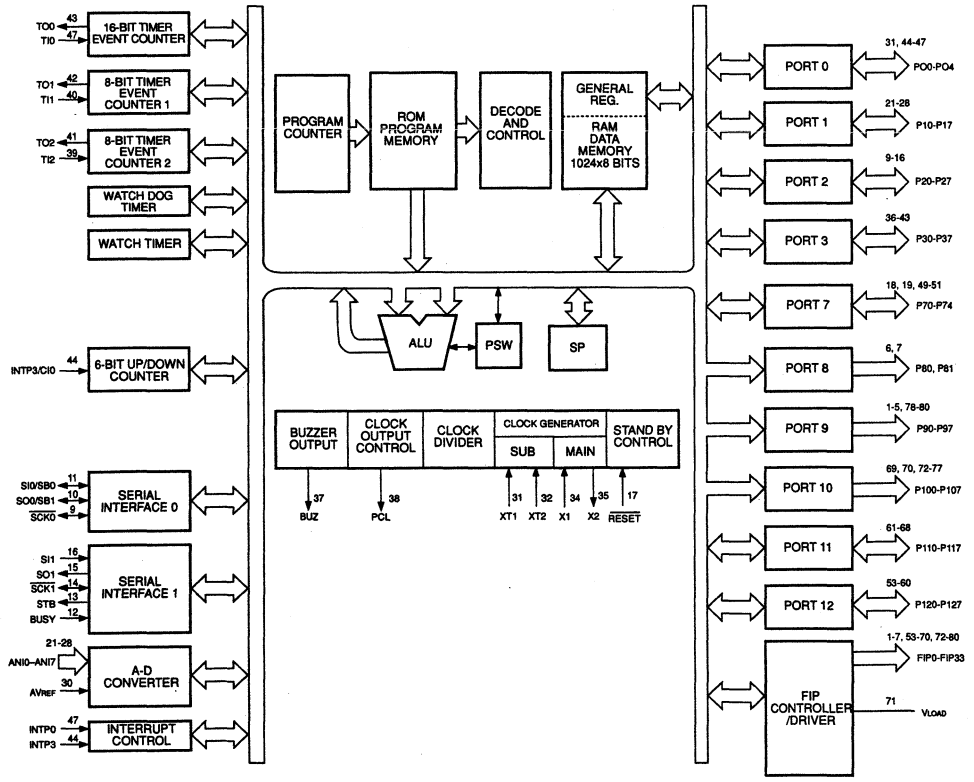

XLH7772KS (EC SEL JAPAN)

C-MOS FM SIGNAL PROCESSOR

– TOP VIEW –

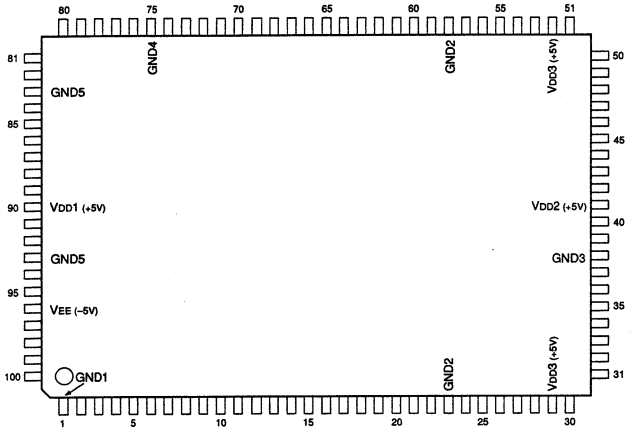

NOTE

VDD1 : FOR REGULATOR BLOCK
VDD2 : FOR FM BPF BLOCK
VDD3 : FOR MODEM BLOCK
GND1 : FOR REGULATOR BLOCK
GND2 : FOR PNR AND MODEM BLOCK
GND3 : FOR FM BPF BLOCK
GND4 : FOR NORMAL AUDIO BLOCK
GND5 : FOR INPUT/OUTPUT SWITCH BLOCK

(VDD=+5V) (VEE=–5V)

PIN No.	I/O	SIGNAL	PIN No.	I/O	SIGNAL	PIN No.	I/O	SIGNAL	PIN No.	I/O	SIGNAL
1	—	GND1	26	I	HOLD1 (L)	51	O	VCO BF OUT (R)	76	I	REC HSW CTRL
2	I	TU IN (R)	27	I/O	PNR I/O (L)	52	—	VDD3	77	I	REC EQ
3	I	TU IN (M)	28	I/O	MOD/DBM I/O (L)	53	I/O	MOD/DBM I/O (R)	78	I	NA REC FB
4	I	TU IN (L)	29	—	VDD3	54	I/O	PNR I/O (R)	79	O	NA REC OUT
5	O	EVR REF	30	O	VCO BF OUT (L)	55	I	HOLD1 (R)	80	I	PB/EE CTRL
6	I	LINE3 IN (R)	31	I	VCO IN (L)	56	I	HOLD2 (R)	81	I	REC/EE CTRL
7	I	MUTE CTRL	32	I	PLC (L)	57	I	FM EMPH (R)	82	O	MODE IND L,R
8	I	LINE3 IN (L)	33	O	BPF MONI (L)	58	—	GND2	83	—	GND5
9	I	EVR CTRL (R)	34	O	FM REC OUT (L)	59	I	NR EMPH (R)	84	I	L/R/ST CTRL
10	I	LINE2 IN (R)	35	I	CARRIER FIL	60	I	DC FB (R)	85	I	H/M/N CTRL
11	I	IN CTRL2	36	I	BPF FO ADJ	61	I	WTNG2 (R)	86	O	HIFI OUT (R)
12	I	LINE2 IN (L)	37	O	ENVE OUT	62	I	WTNG1 (R)	87	O	HIFI OUT (L)
13	I	EVR CTRL (L)	38	—	GND3	63	I	NR TC (R)	88	I	HIFI IN (R)
14	I	LINE1 IN (R)	39	I	FM PB IN	64	I	FADER CTRL	89	I	HIFI IN (L)
15	I	IN CTRL1	40	I	NT/PAL CTRL	65	I	AUTO/MANU CTRL	90	—	VDD1
16	I	LINE1 IN (L)	41	—	VDD2	66	I	EQ CTRL	91	O	ERP
17	I	HIFI ALC	42	I	AHSWP IN	67	I	NA FB	92	I	VREFP
18	I	NR TC (L)	43	I	FNORM DLY	68	I	NA ALC	93	—	GND5
19	I	WTNG1 (L)	44	I	HOLD CT	69	I	NA PB IN	94	I	VREFM
20	I	WTNG2 (L)	45	O	NOISE OUT	70	O	NA PB OUT	95	O	ERM
21	I	DC FB (L)	46	I	N BPF CTRL	71	I	PB EQ	96	—	VEE
22	I	NR EMPH (L)	47	O	FM REC OUT (R)	72	I	NA PB NFB	97	O	LINE OUT (R)
23	—	GND2	48	O	BPF MONI (R)	73	I	NA HEAD IN	98	O	LINE OUT (L)
24	I	FM EMPH (L)	49	I	PLC (R)	74	I	HEAD EQ	99	O	MIX OUT
25	I	HOLD2 (L)	50	I	VCO IN (R)	75	—	GND4	100	I	MIX ALC

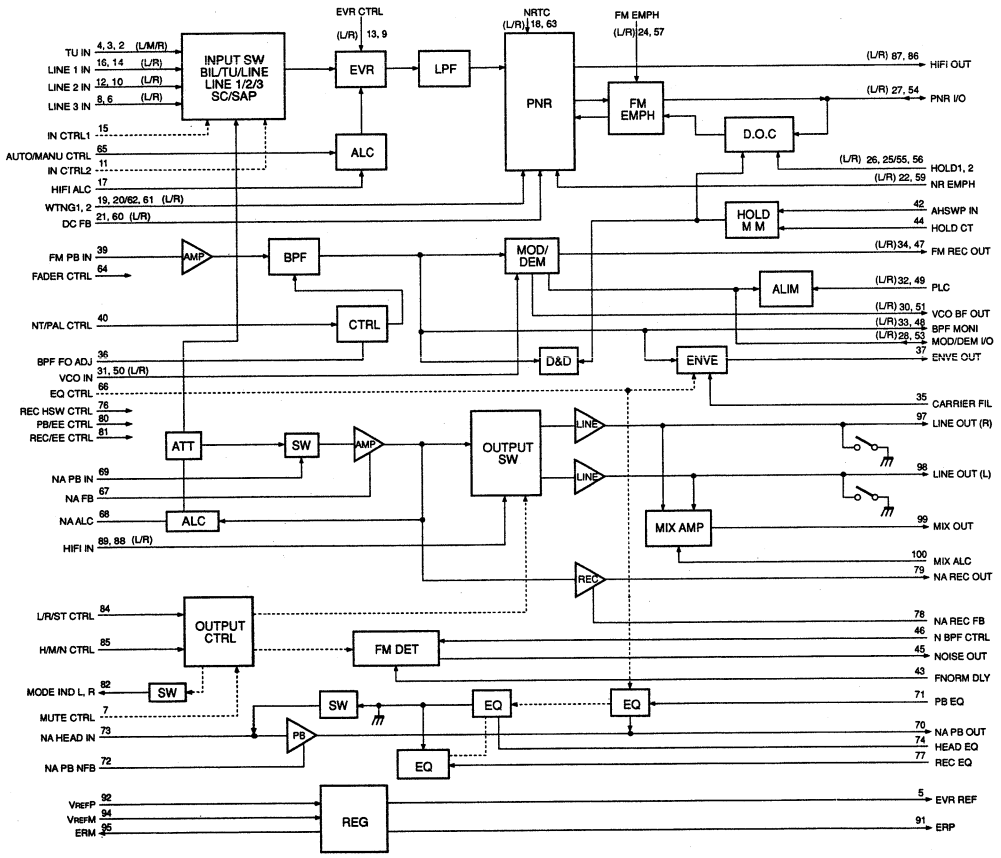

BR9021B (ROHM)

C-MOS 2k (128x16) BITS SERIAL EEPROM
– TOP VIEW –

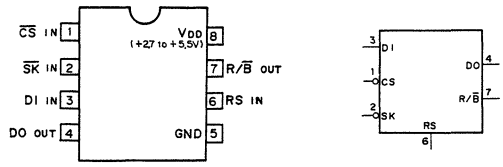

INPUT
CS ; CHIP SELECT
DI ; OP CODE, ADDRESS, AND SERIAL DATA
RS ; RESET
SK ; SERIAL DATA CLOCK

OUTPUT
DO ; SERIAL DATA
R/B ; READY/BUSY STATUS SIGNAL

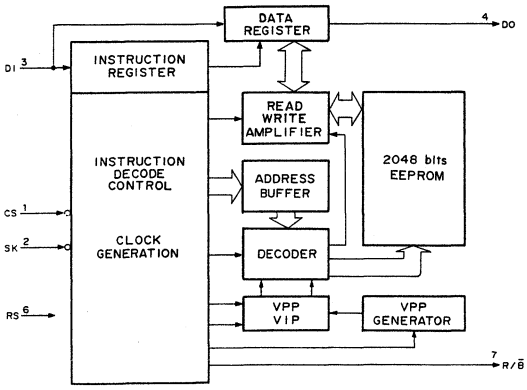

CXD1216M (SONY) FLAT PACKAGE

C-MOS GENLOCK DRIVER
– TOP VIEW –

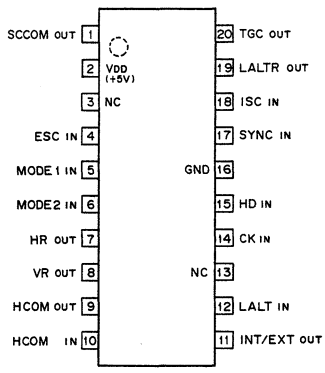

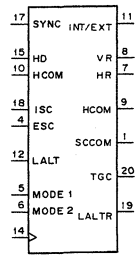

INPUT		MODE	SYSTEM
MODE1	MODE2		
0	0	M1	PAL-VBS
1	0	M2	PALM-VBS
0	1	M3	PAL,SECAM-VS/SC/LALT
1	1	M4	NTSC-VBS,NTSC-VS/SC PALM-VS/SC/LALT

0 ; LOW LEVEL
1 ; HIGH LEVEL

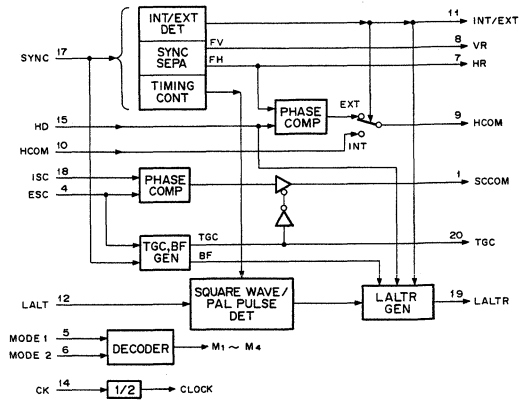

INPUT
CK ; 4fsc CLOCK INPUT
ESC ; SC/COLOR BURST
HCOM ; PHASE COMPARATE FROM CXD1217
HD ; H DRIVE FROM CXD1217
ISC ; SUBCARRIER FROM CXD1217
LALT ; LALT FROM REFERENCE SIGNAL GENERATOR
MODE1,2 ; SYSTEM SELECT
SYNC ; SYNC FROM REFERENCE SIGNAL GENERATOR

OUTPUT
HCOM ; PHASE COMPARATOR HR WITH HD
HR ; fH OF SYNC SEPARATE
INT/EXT ; INTERNAL/EXTERNAL SPECIFIED
LALTR ; LINE CHANGE RESET
SCCOM ; PHASE COMPARATOR ESC WITH ISC
TGC ; TRISTATE CONTROL
VR ; fv OF SYNC SEPARATE

HD14013BP (HITACHI)

C-MOS DUAL D-TYPE FLIP-FLOPS WITH DIRECT SET/RESET
– TOP VIEW –

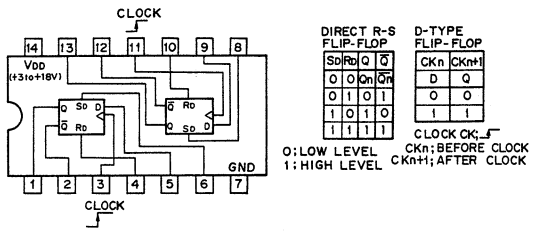

DIRECT R-S FLIP-FLOP			
Sd	Rd	Q	$\overline{Q}$
0	0	On	$\overline{On}$
0	1	0	1
1	0	1	0
1	1	1	1

0; LOW LEVEL
1; HIGH LEVEL

D-TYPE FLIP-FLOP	
CKn	CKn+1
D	Q
0	0
1	1

CLOCK CK;
CKn; BEFORE CLOCK
CKn+1; AFTER CLOCK

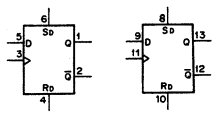

HD14053BFP (HITACHI) FLAT PACKAGE

C-MOS TRIPLE 2-CHANNEL ANALOG MULTIPLEXERS/DEMULTIPLEXERS
– TOP VIEW –

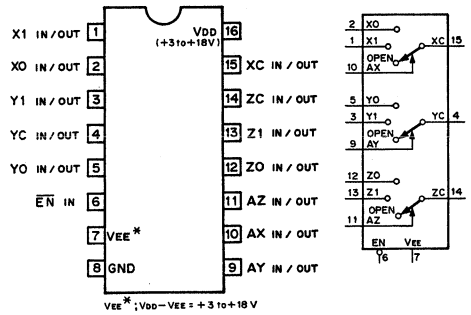

CONT. INPUTS		ON
EN	A (X,Y,Z)	CHANNEL
0	0	0
0	1	1
1	X	OPEN

0; LOW LEVEL
1; HIGH LEVEL
X; DON'T CARE.

MC14040BF (MOTOROLA) FLAT PACKAGE

C-MOS 12-STAGE RIPPLE CARRY BINARY COUNTER/DRIVER
– TOP VIEW –

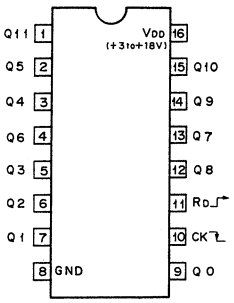

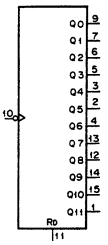

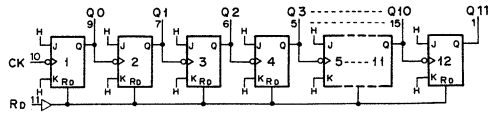

COUNT	Q11	Q10	Q9	Q8	Q7	Q6	Q5	Q4	Q3	Q2	Q1	Q0
0	0	0	0	0	0	0	0	0	0	0	0	0
1	0	0	0	0	0	0	0	0	0	0	0	1
2	0	0	0	0	0	0	0	0	0	0	1	0
3	0	0	0	0	0	0	0	0	0	0	1	1
4095	1	1	1	1	1	1	1	1	1	1	1	1

RD	Q11 ····· Q0
1	ALL LOW
0	COUNT

0; LOW LEVEL
1; HIGH LEVEL

NJM78L05A (JRC) + 5V (100mA)

POSITIVE VOLTAGE REGULATOR

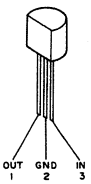

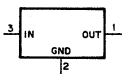

RC4560D (RAYTHEON)
UPC4558G2 (NEC) FLAT PACKAGE

DUAL OPERATIONAL AMPLIFIER
– TOP VIEW –

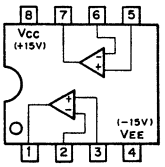

SECTION 16
SPARE PARTS AND OPTIONAL FIXTURES

16-1. NOTES ON SPARE PARTS

(1) Safety Related Components Warning

Components marked with ⚠ on the schematic diagrams, exploded views and electrical spare parts list are critical to safe operation. Replace these components with Sony parts whose part numbers appear in this manual or in service bulletin and service manual supplements published by Sony.

(2) Standardization of Parts

Spare parts supplied from Sony Parts Center may not be always identical with the parts which actually in use due to "accommodating the improved parts and/or engineering changes" or "standardization of genuine parts".
This manual's exploded views and electrical spare parts list are indicating the part numbers of "the standardized genuine parts at present".

(3) Stock of Parts

Parts marked with "o" SP (Supply Code) column of the spare parts list are not normally required for routine service work. Orders for parts marked with "o" will be processed, but allow for additional delivery time.

(4) Units for Capacitors, Inductors and Resistors

The following units are assumed in schematic diagrams, electrical parts list and exploded views unless otherwise specified.

Capacitors : μF
Inductors : μH
Resistors : Ω

補修用部品注意事項

(1) 安全重要部品

回路図，分解図，電気部品表中，⚠印の部品は安全性を維持するために重要な部品です。従ってこれらの部品を交換するときには必ず指定の部品と交換して下さい。

(2) 部品の共通化

ソニーから供給される部品は，セットに実装されているものと異なることがあります。これは部品の共通化，改良等によるものです。
分解図や電気部品表には現時点での共通化された部品が記載されています。

(3) 部品の在庫

部品表の SP（Supply code）欄に o で示される部品は交換頻度が低い部品ですので在庫していないことがあり，納期が長くなることがあります。

(4) コンデンサ，インダクタ，抵抗の単位

回路図，分解図，電気部品表中，特に明記したものを除き，下記の単位は省略されています。

コンデンサ：μF
インダクタ：μH
抵抗　　：Ω

Ornamental Panel Block

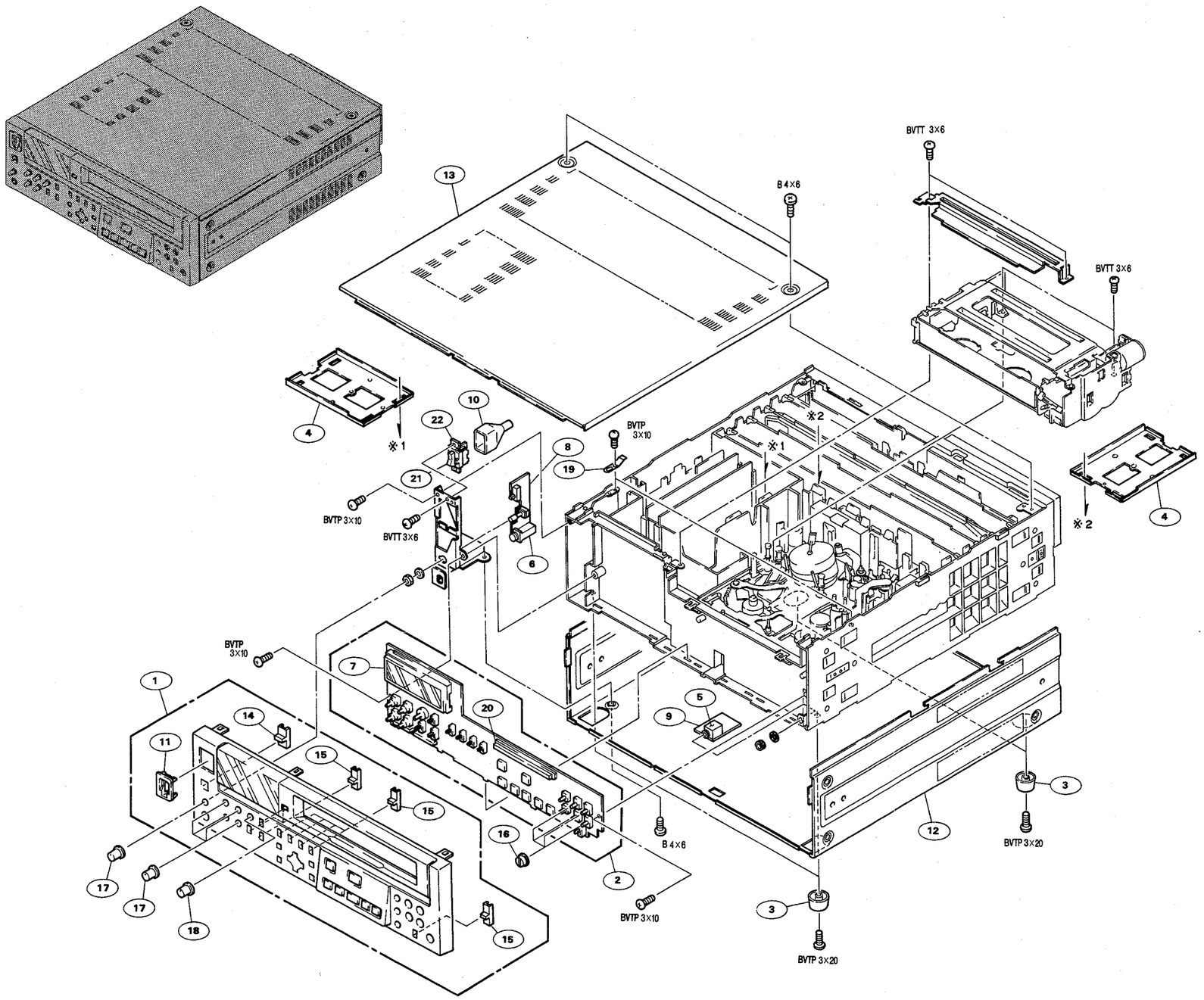

No.	Part No.	SP	Description
1	A-8278-062-A	o	PANEL ASSY, FRONT (for SVO-5800)
	A-8278-063-A	o	PANEL ASSY, FRONT (for SVP-5600)
	A-8278-081-A	o	PANEL ASSY, FRONT (for SVO-5800P)
	A-8278-082-A	o	PANEL ASSY, FRONT (for SVP-5600P)
2	A-8314-445-A	o	MOUNTED CIRCUIT BOARD, KY-303 (for SVO-5800/SVO-5800P)
	A-8314-431-1	o	MOUNTED CIRCUIT BOARD, KY-303B (for SVP-5600/SVP-5600P)
3	X-3566-109-0	s	FOOT ASSY, MF
4	X-3678-165-3	o	RETAINER ASSY, PC BOARD
5	1-507-743-21	s	JACK, STEREO MINIATURE
6	1-507-863-51	s	JACK, LARGE TYPE
7	1-517-342-11	s	INDICATOR TUBE, FLUORESCENT
8	1-653-700-11	o	PRINTED CIRCUIT BOARD, HP-64
9	1-653-702-11	o	PRINTED CIRCUIT BOARD, RM-145
10	2-269-962-00	s	COVER, SWITCH
11	3-182-406-01	o	GUARD, POWER SW
12	3-681-841-01	o	CASE, U
13	3-681-843-01	o	PANEL, TOP
14	3-681-851-01	s	SWITCH CAP LARGE
15	3-681-852-01	s	SWITCH CAP SMALL
16	3-681-856-01	s	KNOB, TBC
17	3-681-857-01	s	KNOB, VOL
18	3-681-858-01	s	KNOB, TRACKING
19	3-682-284-01	o	SPRING, EARTH
20	3-682-296-02	o	HOLDER, LED
21	3-688-814-01	s	CAP, SWITCH
22 ⚠	1-570-117-41	s	SWITCH, SEESAW (AC POWER)

SVO-5800/5800P (1)
SVP-5600/5600P (1)

16-3

Rear Panel Block

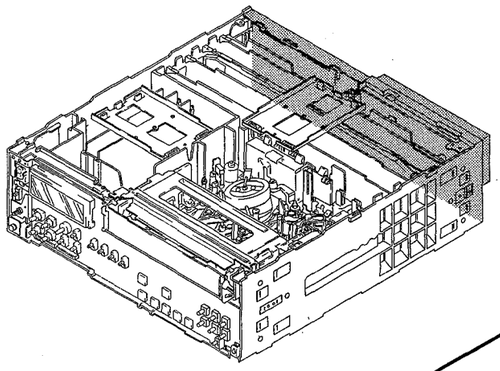

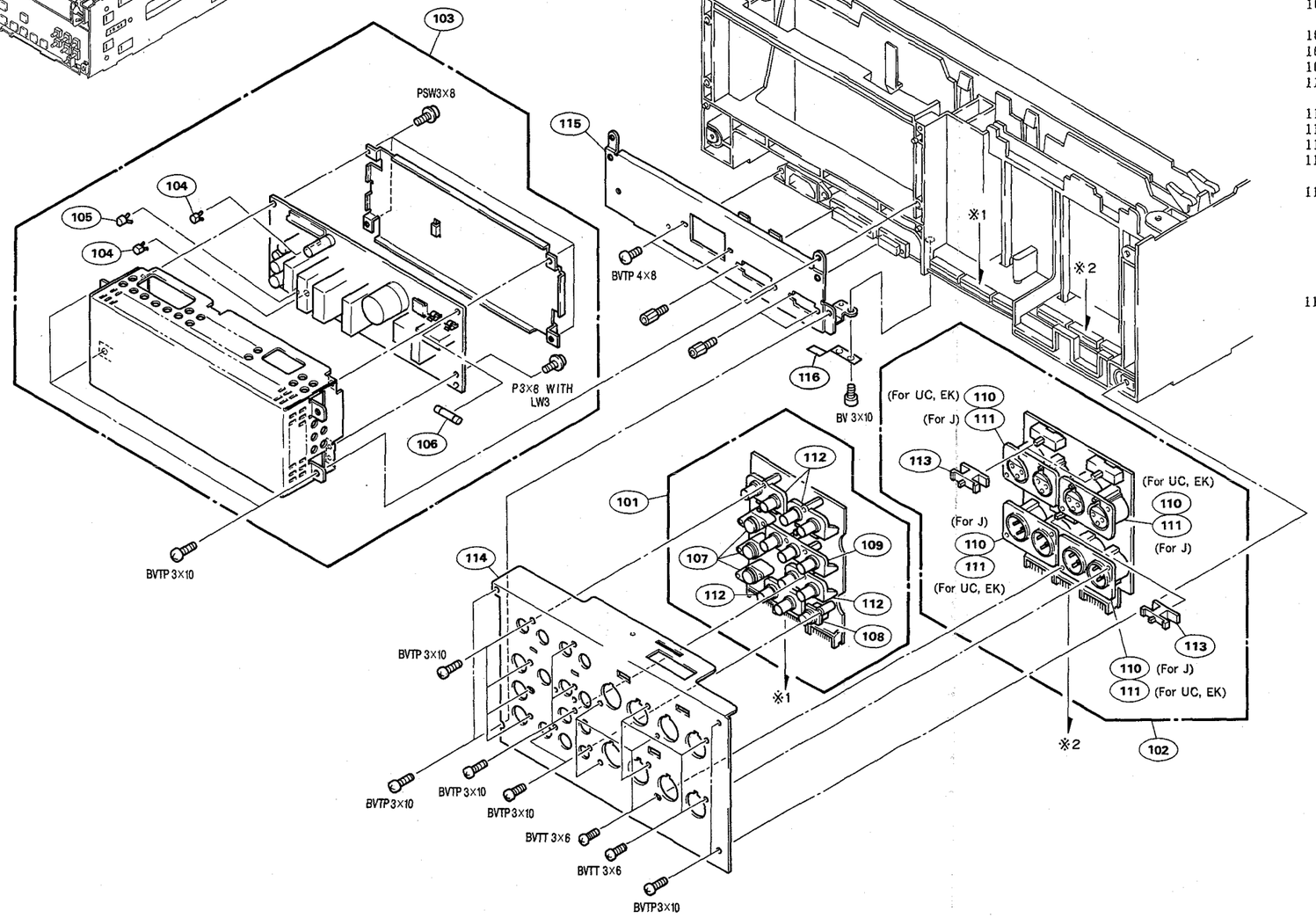

No.	Part No.	SP	Description
101	A-8314-426-A	o	MOUNTED CIRCUIT BOARD, CP-246 (for SVO-5800/SVO-5800P)
	A-8314-415-A	o	MOUNTED CIRCUIT BOARD, CP-246B (for SVP-5600/SVP-5600P)
102	A-8314-427-A	o	MOUNTED CIRCUIT BOARD, CP-247 (for SVO-5800 UC/SVO-5800P)
	A-8314-457-A	o	MOUNTED CIRCUIT BOARD, CP-247A (for SVO-5800 J)
	A-8314-430-A	o	MOUNTED CIRCUIT BOARD, CP-247B (for SVP-5600 UC/SVP-5600P)
	A-8314-441-A	o	MOUNTED CIRCUIT BOARD, CP-247C(for SVP-5600 J)
103	⚠ 1-413-987-11	s	SWITCHING REGULATOR (for SVO-5800/SVP-5600)
	⚠ 1-413-998-11	s	SWITCHING REGULATOR (for SVO-5800P/SVP-5600P)
104	1-532-679-00	s	IC LINC
105	1-532-685-00	s	IC LINC
106	1-532-744-11	s	FUSE 2.5A 125V (for SVO-5800/SVP-5600)
	1-532-203-00	s	FUSE 2A 250V (for SVO-5800P/SVP-5600P)
107	1-573-590-12	s	CONNECTOR, (S) TERMINAL 4P
108	1-691-273-11	s	JACK, PIN 1P
109	1-750-089-11	s	CONNECTOR, BNC 3P
110	1-750-785-11	s	CONNECTOR (XLR TYPE) 3P
111	1-750-786-11	s	CONNECTOR (XLR TYPE) 3P
112	1-766-788-11	s	CONNECTOR, COAXIAL (BNC TYPE)
113	3-171-450-01	o	ADAPTOR, SW
114	3-681-798-01	o	PANEL, REAR (for SVO-5800/SVO-5800P)
	3-681-840-01	o	PANEL, REAR (for SVP-5600/SVP-5600P)
115	3-681-799-01	o	PANEL, RM (for SVO-5800 UC)
	3-681-799-11	o	PANEL, RM (for SVP-5600 UC)
	3-681-799-21	o	PANEL, RM (for SVO-5800P EK)
	3-681-799-31	o	PANEL, RM (for SVP-5600P EK)
	3-681-799-41	o	PANEL, RM (for SVO-5800 J)
	3-681-799-51	o	PANEL, RM (for SVP-5600 J)
116	3-682-284-01	o	SPRING, EARTH

Printed Circuit Boards

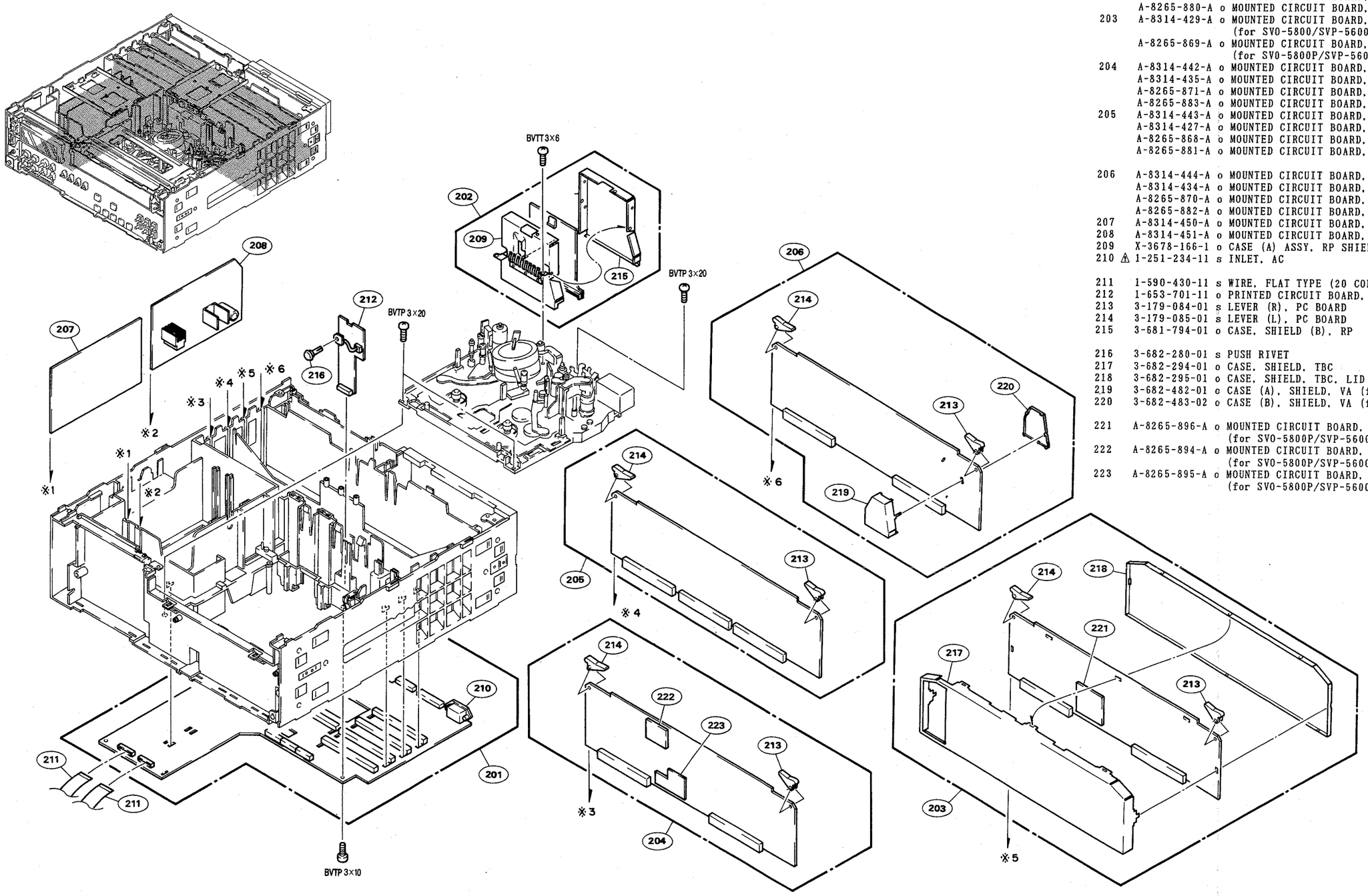

No.	Part No.	SP	Description
201	A-8314-421-A	o	MOUNTED CIRCUIT BOARD, MB-535
202	A-8314-428-A	o	MOUNTED CIRCUIT BOARD, RP-74 (for SVO-5800)
	A-8314-432-A	o	MOUNTED CIRCUIT BOARD, RP-74B (for SVP-5600)
	A-8265-867-A	o	MOUNTED CIRCUIT BOARD, RP-74A (for SVP-5800P)
	A-8265-880-A	o	MOUNTED CIRCUIT BOARD, RP-74C (for SVP-5600P)
203	A-8314-429-A	o	MOUNTED CIRCUIT BOARD, TBC-30 (for SVO-5800/SVP-5600)
	A-8265-869-A	o	MOUNTED CIRCUIT BOARD, TBC-30A (for SVO-5800P/SVP-5600P)
204	A-8314-442-A	o	MOUNTED CIRCUIT BOARD, VO-47 (for SVO-5800)
	A-8314-435-A	o	MOUNTED CIRCUIT BOARD, VO-47B (for SVP-5600)
	A-8265-871-A	o	MOUNTED CIRCUIT BOARD, VO-47A (for SVO-5800P)
	A-8265-883-A	o	MOUNTED CIRCUIT BOARD, VO-47C (for SVP-5600P)
205	A-8314-443-A	o	MOUNTED CIRCUIT BOARD, SS-58 (for SVO-5800)
	A-8314-427-A	o	MOUNTED CIRCUIT BOARD, SS-58B (for SVP-5600)
	A-8265-868-A	o	MOUNTED CIRCUIT BOARD, SS-58A (for SVO-5800P)
	A-8265-881-A	o	MOUNTED CIRCUIT BOARD, SS-58C (for SVP-5600P)
206	A-8314-444-A	o	MOUNTED CIRCUIT BOARD, VA-148 (for SVO-5800)
	A-8314-434-A	o	MOUNTED CIRCUIT BOARD, VA-148B (for SVP-5600)
	A-8265-870-A	o	MOUNTED CIRCUIT BOARD, VA-148A (for SVO-5800P)
	A-8265-882-A	o	MOUNTED CIRCUIT BOARD, VA-148C (for SVP-5600P)
207	A-8314-450-A	o	MOUNTED CIRCUIT BOARD, DR-266
208	A-8314-451-A	o	MOUNTED CIRCUIT BOARD, DR-265
209	X-3678-166-1	o	CASE (A) ASSY, RP SHIELD
210	⚠ 1-251-234-11	s	INLET, AC
211	1-590-430-11	s	WIRE, FLAT TYPE (20 CORE)
212	1-653-701-11	o	PRINTED CIRCUIT BOARD, CN-1053
213	3-179-084-01	s	LEVER (R), PC BOARD
214	3-179-085-01	s	LEVER (L), PC BOARD
215	3-681-794-01	o	CASE, SHIELD (B), RP
216	3-682-280-01	s	PUSH RIVET
217	3-682-294-01	o	CASE, SHIELD, TBC
218	3-682-295-01	o	CASE, SHIELD, TBC, LID BOTTOM
219	3-682-482-01	o	CASE (A), SHIELD, VA (for SVO-5800/SVO-5800P)
220	3-682-483-02	o	CASE (B), SHIELD, VA (for SVO-5800/SVO-5800P)
221	A-8265-896-A	o	MOUNTED CIRCUIT BOARD, DUS-812 (for SVO-5800P/SVP-5600P)
222	A-8265-894-A	o	MOUNTED CIRCUIT BOARD, DUS-808 (for SVO-5800P/SVP-5600P)
223	A-8265-895-A	o	MOUNTED CIRCUIT BOARD, DUS-809 (for SVO-5800P/SVP-5600P)

Cassette Compartment Block

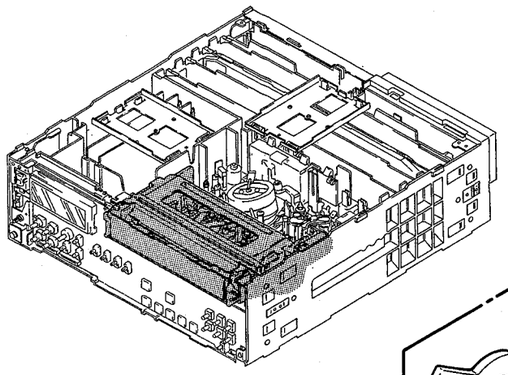

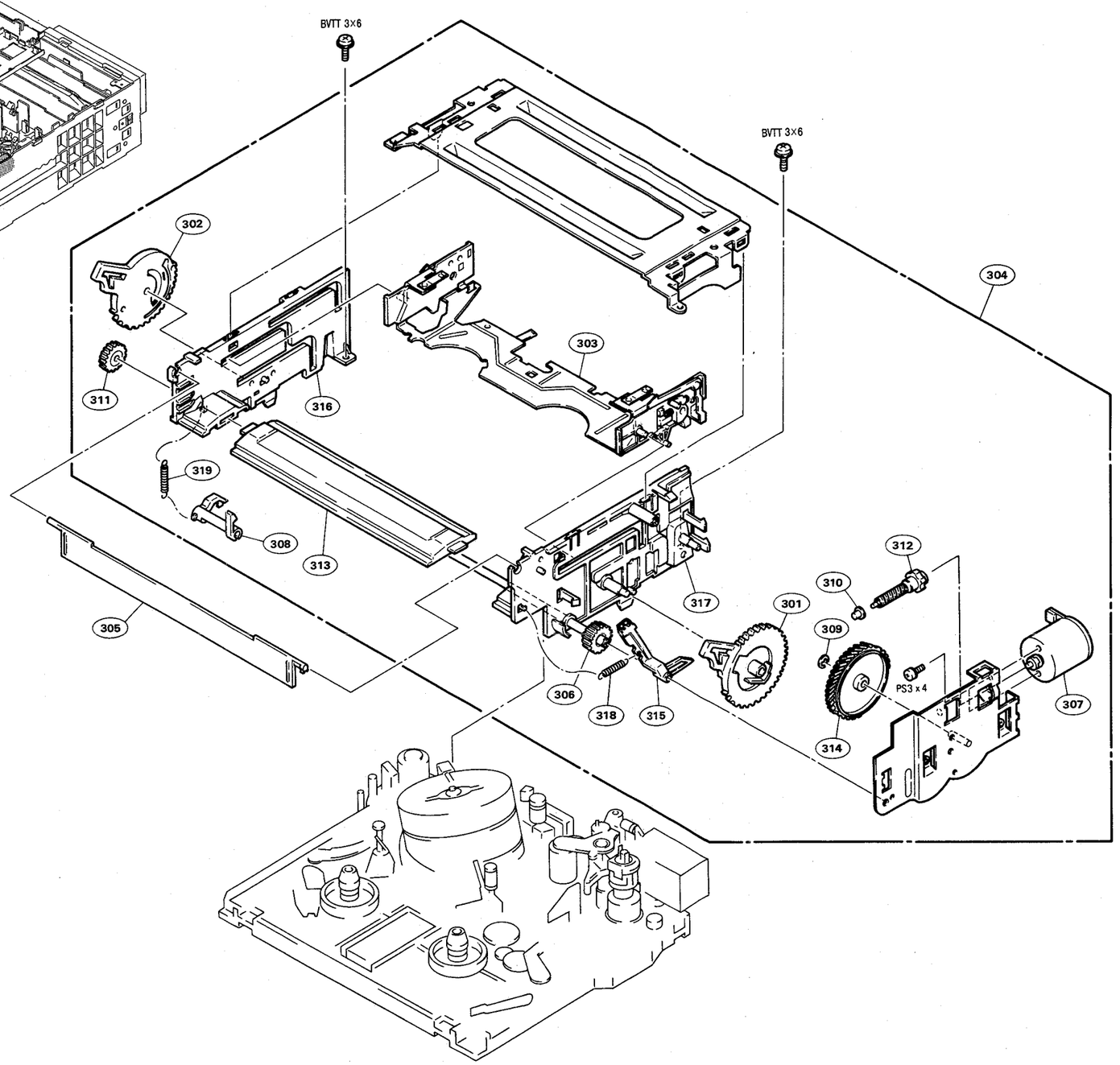

No.	Part No.	SP	Description
301	A-6751-402-B	s	ARM(RIGHT) BLOCK ASSY, DRIVING
302	A-6751-441-B	s	ARM (LEFT) BLOCK ASSY, DRIVING
303	A-6751-442-F	s	DECK BLOCK ASSY
304	A-6751-446-A	s	FL BLOCK ASSY
305	X-3678-176-1	s	FL DOOR ASSY (for SVO-5800/SVP-5600)
	X-3678-189-1	s	FL DOOR ASSY (for SVO-5800P/SVP-5600P)
306	X-3727-775-2	s	GEAR (RIGHT) ASSY, MIDWAY
307	X-3727-784-1	s	MOTOR ASSY
308	3-168-046-03	s	LEVER, PREVENTION
309	3-696-510-01	s	WASHER (3), STOPPER
310	3-716-144-02	s	WORM RETAINER
311	3-736-044-02	s	GEAR (LEFT), MIDWAY
312	3-736-100-01	s	GEAR (FL), WORM
313	3-736-162-02	s	RETAINER, CASSETTE
314	3-736-164-01	s	WHEEL (FL), WORM
315	3-736-167-01	s	ARM, DOOR SWITCHING
316	3-736-179-05	s	PLATE, SIDE, LEFT
317	3-736-180-07	s	PLATE, SIDE, RIGHT
318	3-738-285-01	s	SPRING, TENSION
319	3-739-687-01	s	SPRING, TENSION

Head Drum and Tape Run Blocks

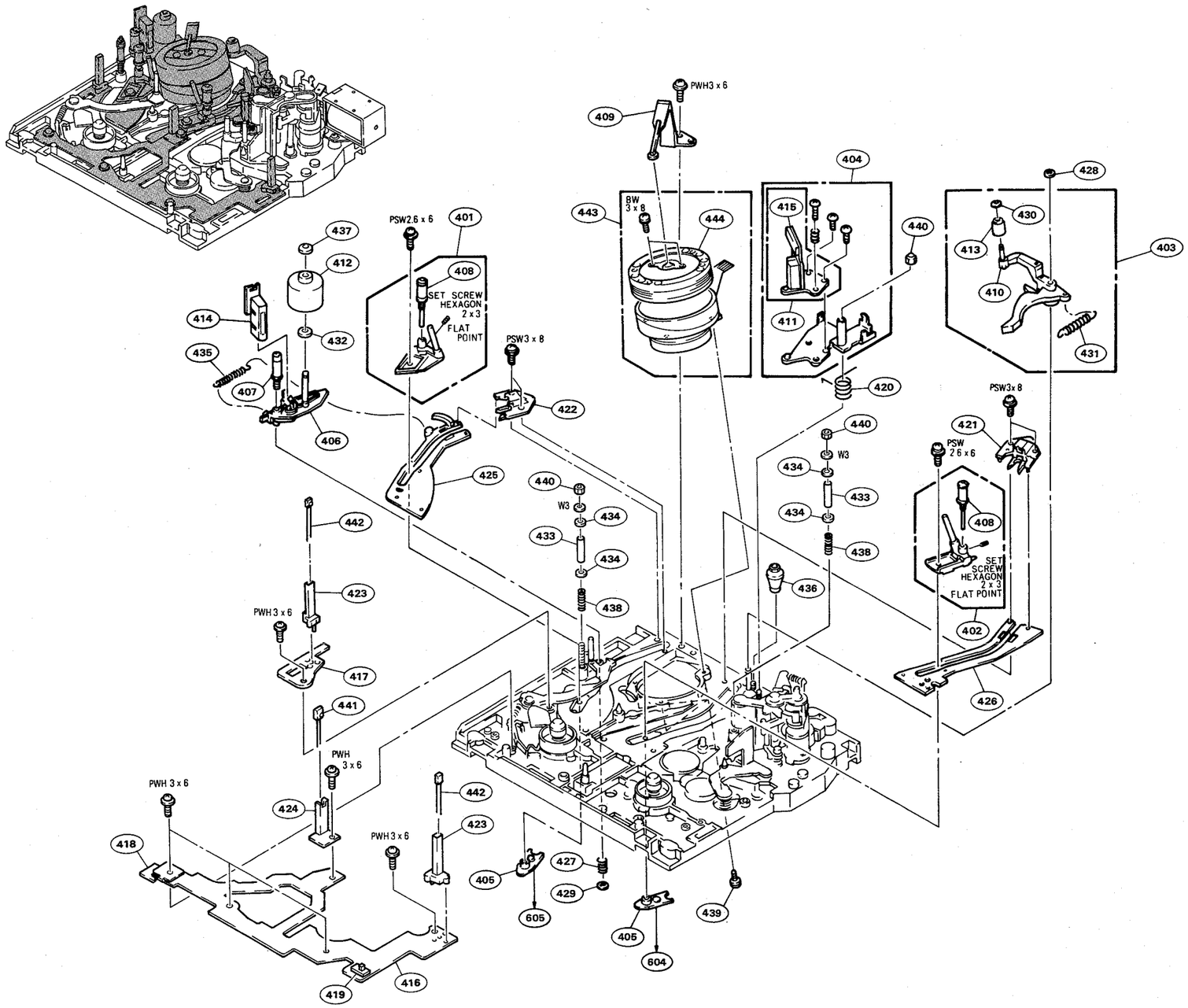

No.	Part No.	SP	Description
401	A-6746-062-C	s	SHUTTLE (LEFT) BLOCK ASSY
402	A-6746-063-D	s	SHUTTLE (RIGHT) BLOCK ASSY
403	A-6747-277-A	o	ROLLER BLOCK ASSY, MC
404	A-8262-502-A	s	HEAD BLOCK ASSY, AUDIO (for SVO-5800/SVO-5800P)
	A-6736-092-A	s	HEAD ASSY, AUDIO (for SVP-5600/SVP-5600P)
405	X-3165-329-1	o	PLATE ASSY, SHUTTLE
406	X-3167-341-3	o	BASE ASSY, STABILIZER
407	X-3165-336-1	s	ROLLER ASSY, No.2 GUIDE
408	X-3165-337-1	s	ROLLER ASSY, GUIDE
409	X-3165-584-1	s	GROUND ASSY, SHAFT
410	X-3166-556-1	o	ARM ASSY, MC ROLLER
411	X-3166-709-1	o	HEAD ASSY, ACE (for SVO-5800/SVO-5800P)
	X-3165-588-1	o	HEAD ASSY, ACE (for SVP-5600/SVP-5600P)
412	X-3167-342-1	s	ROLLER ASSY, IP
413	X-3743-515-4	s	ROLLER ASSY, C
414	1-543-695-11	s	HEAD, FULL-ERASE (for SVO-5800/SVO-5800P)
415	1-642-576-11	o	PRINTED CIRCUIT BOARD, AH-40 (for SVO-5800/SVO-5800P)
416	1-650-152-11	o	PRINTED CIRCUIT BOARD, HN-198
417	1-650-153-11	o	PRINTED CIRCUIT BOARD, SE-224
418	1-650-155-11	o	PRINTED CIRCUIT BOARD, SW-668
419	1-650-382-11	o	PRINTED CIRCUIT BOARD, SW-673
420	3-166-987-01	s	SPRING, AH COIL
421	3-166-992-02	s	HOLDER, SHUTTLE
422	3-166-992-11	s	HOLDER, SHUTTLE
423	3-167-013-02	o	HOLDER, ST SENSOR
424	3-167-028-02	o	HOLDER, LED
425	3-167-034-02	s	RAIL (L), SLIDE
426	3-167-035-05	s	RAIL (R), SLIDE
427	3-305-423-00	s	SPRING, COMPRESSION
428	3-650-537-00	o	WASHER
429	3-669-465-00	s	WASHER (1.5), STOPPER
430	3-669-595-00	s	WASHER (2), STOPPER
431	3-669-979-00	s	SPRING, TENSION
432	3-701-437-01	s	WASHER, POLY 2MM DIA., 0.13T
433	3-736-730-01	s	SLEEVE, No.7 GUIDE
434	3-736-733-02	s	FLANGE, 7 GUIDE
435	3-736-745-01	s	SPRING
436	3-738-250-01	s	SCREW, AC ADJUSTMENT
437	3-741-925-01	s	RING, RETAINING
438	3-749-099-01	s	SPRING (No.7 GUIDE), COMPRESSION
439	3-899-248-11	s	SCREW (M3x8)
440	3-942-866-01	s	NUT (N3) (3x0.5), NYLON
441	8-719-985-00	s	LED GL451VS1, IR
442	8-729-926-31	s	PHOTOTRANSISTOR PT483F1S
443	8-848-628-11	s	DRUM ASSY DZH-69A-R (for SVO-5800/SVP-5600)
	8-848-578-12	s	DRUM ASSY DZH-41A-R (for SVO-5800P/SVP-5600P)
444	8-848-629-01	s	UPPER DRUM ASSY, DZR-69-R (for SVO-5800/SVP-5600)
	8-848-579-02	s	UPPER DRUM ASSY, DZR-41-R (for SVO-5800P/SVP-5600P)

Reel Table and Pinch Roller Blocks

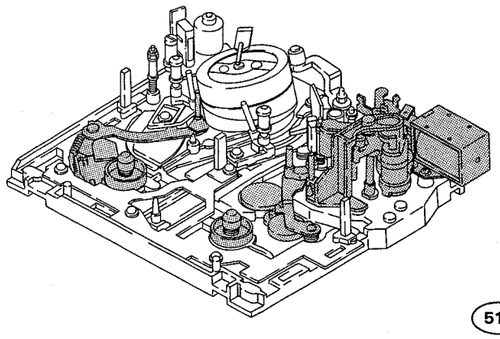

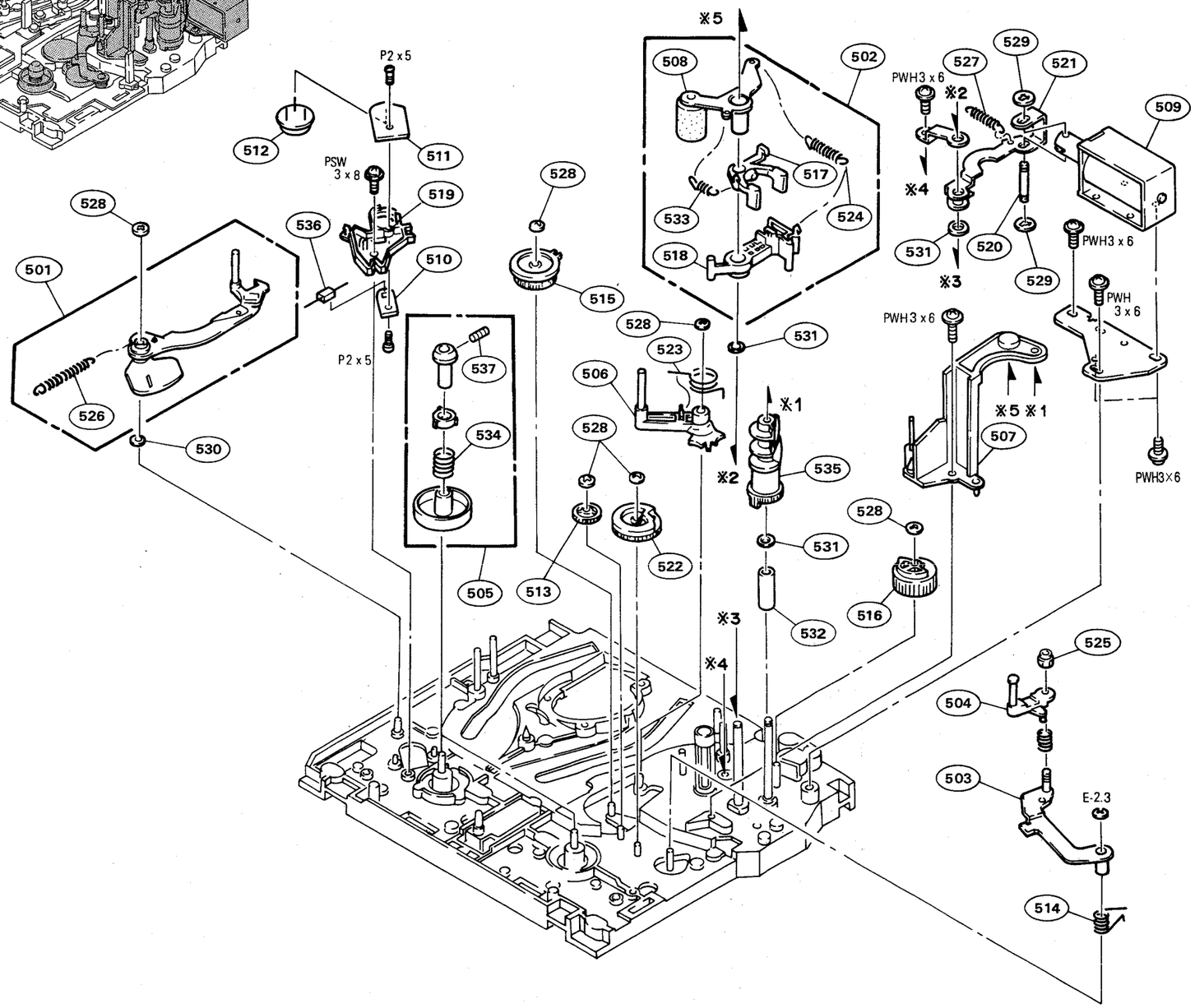

No.	Part No.	SP	Description
501	A-6742-071-A	s	ARM ASSY, TENSION REGULATOR
502	A-6750-279-D	s	PINCH ROLLER BLOCK ASSY
503	X-3165-340-1	o	ARM ASSY, RVS
504	X-3165-341-1	s	BASE ASSY, GUIDE
505	X-3165-345-3	s	TABLE ASSY, REEL
506	X-3166-369-2	s	GEAR ASSY, FR
507	X-3166-781-1	s	OPENER ASSY, CASSETTE
508	X-3167-443-1	o	ARM ASSY, PINCH ROLLER
509	1-454-434-31	s	SOLENOID, PLUNGER
510	1-650-346-11	o	PRINTED CIRCUIT BOARD, LE-131
511	1-650-347-11	o	PRINTED CIRCUIT BOARD, SE-230
512	1-806-232-21	s	DETECTOR MB-1102/S.N
513	3-166-989-02	s	GEAR, RVS RELAY
514	3-166-991-01	s	SPRING, RVS COIL
515	3-167-006-01	s	GEAR, FR DRIVING
516	3-167-008-01	s	GEAR, PRESS CAM
517	3-167-011-03	o	CONVEXITY BLOCK
518	3-167-012-03	o	ARM, PRESS LOCK
519	3-167-036-01	o	HOLDER, STD
520	3-174-491-01	o	PIN, SOLENOID
521	3-174-492-01	s	LEVER, PRESS
522	3-174-891-01	s	GEAR (2), RVS CAM
523	3-174-892-01	s	SPRING, FR COIL
524	3-177-579-01	s	SPRING, TENSION
525	3-181-686-01	s	NUT (N3) (3x0.35)
526	3-490-159-03	s	SPRING, TENSION
527	3-646-209-11	s	SPRING, M-SW LEVER
528	3-669-596-01	s	WASHER (2.3), STOPPER
529	3-694-792-01	o	WASHER
530	3-701-439-21	s	WASHER, POLY 3MM DIA., 0.5t
531	3-701-443-21	s	WASHER, POLY 5MM DIA., 0.5t
532	3-703-309-31	s	SPACER (5x18)
533	3-736-046-01	s	SPRING (RETURN), TENSION
534	3-739-621-01	s	SPRING, COMPRESSION
535	3-952-182-01	s	CAM, ELEVATOR
536	8-719-821-22	s	LED TL0221, ORG
537	3-701-506-01	s	SET SCREW, DOUBLE POINT 3x4

Mechanism Control Block

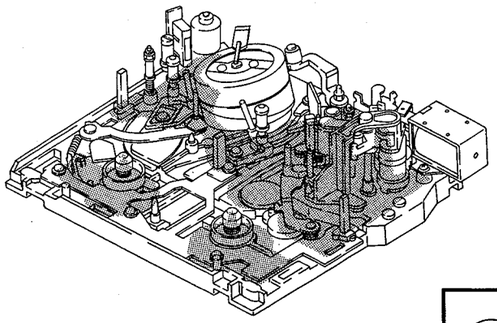

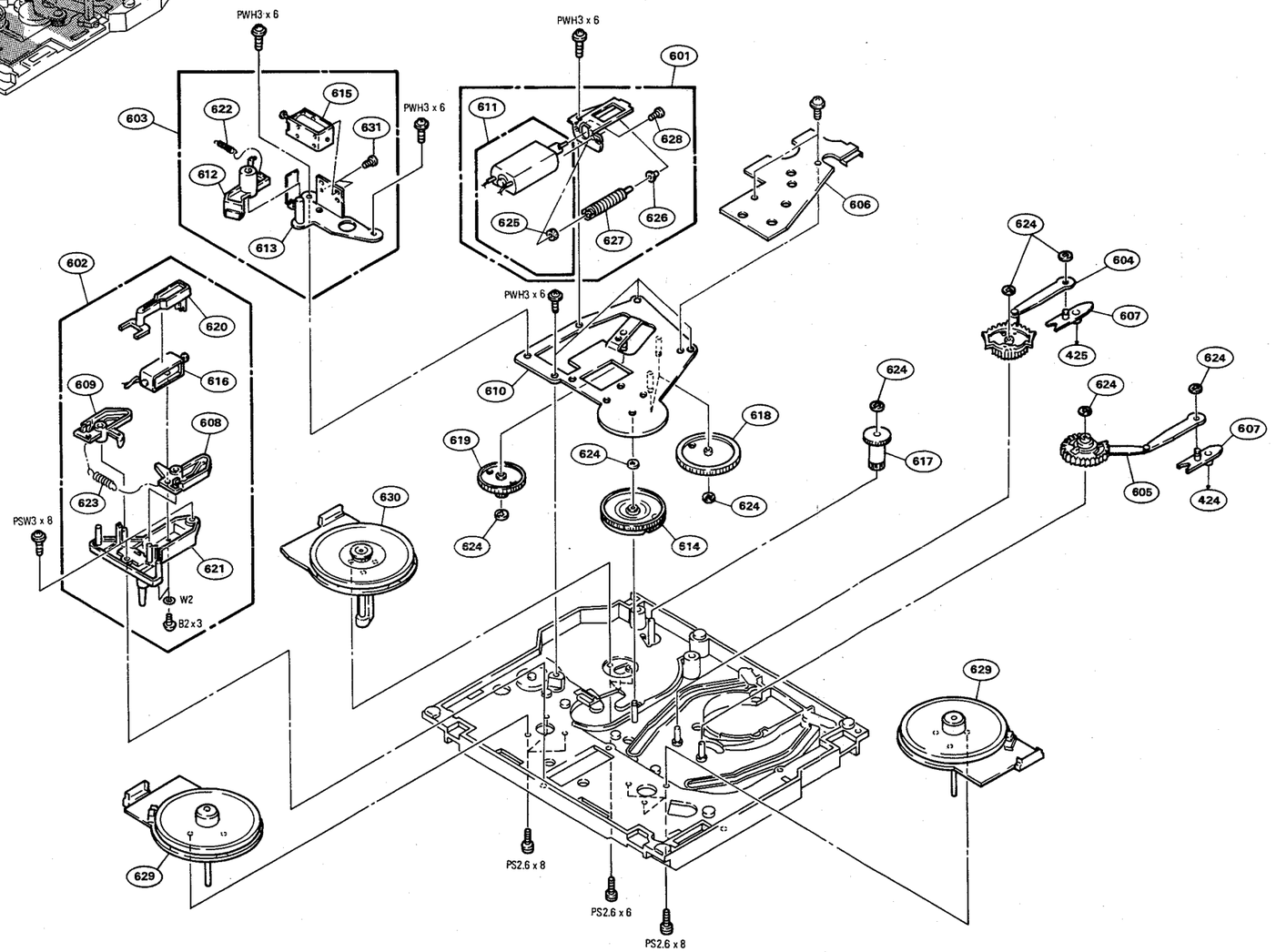

No.	Part No.	SP	Description
601	A-6737-203-C	s	MOTOR BLOCK ASSY, CAM
602	A-6741-069-A	o	BRAKE BLOCK ASSY, REEL
603	A-6741-070-A	o	BRAKE BLOCK ASSY, LDB
604	A-6750-281-A	s	GEAR (RIGHT) BLOCK ASSY, LOADING
605	A-6750-282-B	s	GEAR (LEFT) BLOCK ASSY, LOADING
606	A-8314-425-A	o	MOUNTED CIRCUIT BOARD, PTC-73A
607	X-3165-329-1	o	PLATE ASSY, SHUTTLE
608	X-3165-330-3	s	ARM (S) ASSY, BRAKE
609	X-3165 331-2	s	ARM (T) ASSY, BRAKE
610	X-3165-347-2	o	HOLDER ASSY, DRIVING GEAR
611	X-3165-593-3	o	MOTOR ASSY, CAM
612	X-3166-511-1	s	ARM ASSY, LDB
613	X-3166-512-2	o	LDB (BASE) ASSY
614	X-3166-575-1	s	GEAR (2) ASSY, MODE
615	1-454-334-71	s	SOLENOID, PLUNGER
616	1-454-531-11	s	SOLENOID, PLUNGER
617	3-166-988-01	s	GEAR, PINCH COMMUNICATION
618	3-167-001-01	s	GEAR, RELAY
619	3-167-081-01	s	WHEEL, WORM
620	3-167-834-01	o	SLIDER, B
621	3-167-835-01	o	CLAMP, M
622	3-176-439-02	s	SPRING, TENSION
623	3-533-253-01	s	SPRING, TENSION
624	3-669-596-01	s	WASHER (2.3), STOPPER
625	3-696-388-01	s	RUBBER, JOINT
626	3-716-144-02	s	RETAINER, WORM
627	3-733-395-01	s	GEAR (CAM), WORM
628	7-627-553-27	s	SCREW, PRECISION +P 2x2.5
629	8-835-501-01	s	MOTOR, DC SRV-0202A
630	8-835-480-02	s	MOTOR, DC SCV-0401A
631	7-627-554-07	s	SCREW, PRECISION +P 2x2.2

16-3. ELECTRICAL PARTS LIST

AH-28 BOARD(SVP-5600P)

Ref. No. or Q'ty	Part No.	SP	Description
AH-28 is used for SVP-5600P(EK).			
CN616R	1-506-483-21	s	CONNECTOR, 4P, MALE
CN618W	1-506-481-11	s	CONNECTOR 2P, MALE
HI001	X-3165-588-1	o	HEAD ASSY, ACE

AH-40 BOARD(SVO-5800P)

Ref. No. or Q'ty	Part No.	SP	Description
AH-40 is used for SVO-5800P(EK).			
1pc	1-642-576-11	o	PRINTED CIRCUIT BOARD, AH-40
CN616R	1-506-483-21	s	CONNECTOR, 4P, MALE
CN617Y	1-506-483-21	s	CONNECTOR, 4P, MALE
CN618W	1-506-481-11	s	CONNECTOR 2P, MALE
HI001	X-3166-709-1	o	HEAD ASSY, ACE

CN-1053 BOARD

Ref. No. or Q'ty	Part No.	SP	Description
1pc	3-682-280-01	s	PUSH RIVET
1pc	1-653-701-11	o	PRINTED CIRCUIT BOARD, CN-1053
CN111	1-506-482-11	s	CONNECTOR 3P, MALE
CN121	1-564-013-31	s	CONNECTOR 3P, MALE
CN122	1-506-481-11	s	CONNECTOR 2P, MALE
CN124	1-564-001-11	o	CONNECTOR 2P, MALE
CN808	1-766-789-11	o	CONNECTOR, BB 10P, MALE
CS1001	1-810-715-11	s	SENSOR, CONDENSATION

CP-246 BOARD(SVO-5800P)

Ref. No. or Q'ty	Part No.	SP	Description
CP-246 board is used for SVO-5800P(EK).			
1pc	A-8314-426-A	o	MOUNTED CIRCUIT BOARD, CP-246
C10	1-126-157-11	s	ELECT 10uF 20% 16V
C11	1-164-232-11	s	CERAMIC, CHIP 0.01uF 10% 100V
CN1	1-766-788-11	s	CONNECTOR, BNC, FEMALE
CN2	1-766-788-11	s	CONNECTOR, BNC, FEMALE
CN3	1-573-590-12	s	CONNECTOR, CIRCULAR 4P, FEMALE
CN4	1-750-089-11	s	CONNECTOR, 3-BNC, FEMALE
CN5	1-573-590-12	s	CONNECTOR, CIRCULAR 4P, FEMALE
CN6	1-766-788-11	s	CONNECTOR, BNC, FEMALE
CN7	1-691-273-11	s	JACK, PIN 1P, FEMALE
CN8	1-766-788-11	s	CONNECTOR, BNC, FEMALE
CN10	1-573-590-12	s	CONNECTOR, CIRCULAR 4P, FEMALE
CN601	1-766-790-11	o	CONNECTOR, BB 12P, MALE
CN602	1-766-790-11	o	CONNECTOR, BB 12P, MALE
CN603	1-766-789-11	o	CONNECTOR, BB 10P, MALE
FL1-FL13	1-236-058-11	s	COMPOSITION CIRCUIT BLOCK
FL14	1-236-129-11	s	ENCAPSULATED COMPONENTS, LC
FL15	1-236-129-11	s	ENCAPSULATED COMPONENTS, LC
FL16	1-236-129-11	s	ENCAPSULATED COMPONENTS, LC
Q10	8-729-230-49	s	TRANSISTOR 2SC2712-YG
Q11	8-729-202-38	s	TRANSISTOR 2SC3326N
R10	1-216-624-11	s	METAL, CHIP 75 0.5% 1/10W
R11	1-216-624-11	s	METAL, CHIP 75 0.5% 1/10W
R12	1-216-624-11	s	METAL, CHIP 75 0.5% 1/10W
R13	1-216-097-00	s	METAL, CHIP 100K 5% 1/10W
R14	1-216-624-11	s	METAL, CHIP 75 0.5% 1/10W
R15	1-216-105-91	s	METAL, CHIP 220K 5% 1/10W
R16	1-216-055-00	s	METAL, CHIP 1.8K 5% 1/10W
R17	1-216-073-00	s	METAL, CHIP 10K 5% 1/10W
R18	1-216-059-00	s	METAL, CHIP 2.7K 5% 1/10W
R19	1-216-097-00	s	METAL, CHIP 100K 5% 1/10W
S1	1-570-145-11	s	SWITCH, SLIDE
S2	1-570-145-11	s	SWITCH, SLIDE

CP-246B BOARD(SVP-5600P)

Ref. No.
or Q'ty Part No. SP Description

CP-246B board is used for SVP-5600P(EK).

1pc	A-8314-415-A	o	MOUNTED CIRCUIT BOARD, CP-246B
CN1	1-766-788-11	s	CONNECTOR, BNC, FEMALE
CN4	1-750-089-11	s	CONNECTOR, 3-BNC, FEMALE
CN5	1-573-590-12	s	CONNECTOR, CIRCULAR 4P, FEMALE
CN6	1-766-788-11	s	CONNECTOR, BNC, FEMALE
CN7	1-691-273-11	s	JACK, PIN 1P, FEMALE
CN8	1-691-274-11	s	CONNECTOR, BNC, FEMALE
CN10	1-573-590-12	s	CONNECTOR, CIRCULAR 4P, FEMALE
CN601	1-766-790-11	o	CONNECTOR, BB 12P, MALE
CN602	1-766-790-11	o	CONNECTOR, BB 12P, MALE
CN603	1-766-789-11	o	CONNECTOR, BB 10P, MALE
FL1-FL13	1-236-058-11	s	COMPOSITION CIRCUIT BLOCK
FL14	1-236-129-11	s	ENCAPSULATED COMPONENTS, LC
FL16	1-236-129-11	s	ENCAPSULATED COMPONENTS, LC
Q11	8-729-202-38	s	TRANSISTOR 2SC3326N
R10	1-216-624-11	s	METAL, CHIP 75 0.5% 1/10W
R16	1-216-055-00	s	METAL, CHIP 1.8K 5% 1/10W
R17	1-216-073-00	s	METAL, CHIP 10K 5% 1/10W
R18	1-216-059-00	s	METAL, CHIP 2.7K 5% 1/10W
S1	1-570-145-11	s	SWITCH, SLIDE

CP-247 BOARD(SVO-5800P)

Ref. No.
or Q'ty Part No. SP Description

CP-247 board is used for SVO-5800P(EK).

1pc	A-8314-427-A	o	MOUNTED CIRCUIT BOARD, CP-247
3pcs	3-171-450-01	o	ADAPTOR, SW
C100	1-126-157-11	s	ELECT 10uF 20% 16V
C101	1-126-157-11	s	ELECT 10uF 20% 16V
C102	1-126-157-11	s	ELECT 10uF 20% 16V
C103	1-126-933-11	s	ELECT 100uF 20% 16V
C104	1-126-933-11	s	ELECT 100uF 20% 16V
C105	1-126-934-11	s	ELECT 220uF 20% 16V
C106	1-126-934-11	s	ELECT 220uF 20% 16V
C107	1-164-232-11	s	CERAMIC, CHIP 0.01uF 10% 100V
C108	1-164-232-11	s	CERAMIC, CHIP 0.01uF 10% 100V
C109	1-163-227-11	s	CERAMIC, CHIP 10PF 5% 50V
C200	1-126-157-11	s	ELECT 10uF 20% 16V
C201	1-126-157-11	s	ELECT 10uF 20% 16V
C202	1-126-157-11	s	ELECT 10uF 20% 16V
C203	1-126-933-11	s	ELECT 100uF 20% 16V
C204	1-126-933-11	s	ELECT 100uF 20% 16V
C205	1-126-934-11	s	ELECT 220uF 20% 16V
C206	1-126-934-11	s	ELECT 220uF 20% 16V
C207	1-164-232-11	s	CERAMIC, CHIP 0.01uF 10% 100V
C208	1-164-232-11	s	CERAMIC, CHIP 0.01uF 10% 100V
C209	1-163-227-11	s	CERAMIC, CHIP 10PF 5% 50V
C300	1-126-157-11	s	ELECT 10uF 20% 16V
C301	1-126-157-11	s	ELECT 10uF 20% 16V
C302	1-126-157-11	s	ELECT 10uF 20% 16V
C303	1-126-933-11	s	ELECT 100uF 20% 16V
C304	1-126-933-11	s	ELECT 100uF 20% 16V
C305	1-126-934-11	s	ELECT 220uF 20% 16V
C306	1-126-934-11	s	ELECT 220uF 20% 16V
C307	1-164-232-11	s	CERAMIC, CHIP 0.01uF 10% 100V
C308	1-164-232-11	s	CERAMIC, CHIP 0.01uF 10% 100V
C309	1-163-227-11	s	CERAMIC, CHIP 10PF 5% 50V
C400	1-126-157-11	s	ELECT 10uF 20% 16V
C401	1-126-157-11	s	ELECT 10uF 20% 16V
C402	1-126-157-11	s	ELECT 10uF 20% 16V
C403	1-126-933-11	s	ELECT 100uF 20% 16V
C404	1-126-933-11	s	ELECT 100uF 20% 16V
C405	1-126-934-11	s	ELECT 220uF 20% 16V
C406	1-126-934-11	s	ELECT 220uF 20% 16V
C407	1-164-232-11	s	CERAMIC, CHIP 0.01uF 10% 100V
C408	1-164-232-11	s	CERAMIC, CHIP 0.01uF 10% 100V
C409	1-163-227-11	s	CERAMIC, CHIP 10PF 5% 50V
CN1	1-750-786-11	s	CONNECTOR, XLR 3P, FEMALE
CN2	1-750-786-11	s	CONNECTOR, XLR 3P, FEMALE
CN3	1-750-785-11	s	CONNECTOR, XLR 3P, MALE
CN4	1-750-785-11	s	CONNECTOR, XLR 3P, MALE
CN701	1-766-789-11	o	CONNECTOR, BB 10P, MALE
CN702	1-766-789-11	o	CONNECTOR, BB 10P, MALE
CN703	1-766-789-11	o	CONNECTOR, BB 10P, MALE
IC100	8-759-711-82	s	IC NJM4580E(T2)
IC101	8-759-711-82	s	IC NJM4580E(T2)
IC102	8-759-700-94	s	IC NJM5532M
IC103	8-759-711-82	s	IC NJM4580E(T2)
IC104	8-759-604-64	s	IC M5203FP-T2
IC200	8-759-711-82	s	IC NJM4580E(T2)
IC201	8-759-711-82	s	IC NJM4580E(T2)

(CP-247 BOARD(SVO-5800P))

Ref. No. or Q'ty	Part No.	SP	Description
IC202	8-759-700-94	s	IC NJM5532M
IC204	8-759-604-64	s	IC M5203FP-T2
IC300	8-759-711-82	s	IC NJM4580E(T2)
IC301	8-759-711-82	s	IC NJM4580E(T2)
IC302	8-759-700-94	s	IC NJM5532M
IC303	8-759-711-82	s	IC NJM4580E(T2)
IC400	8-759-711-82	s	IC NJM4580E(T2)
IC401	8-759-711-82	s	IC NJM4580E(T2)
IC402	8-759-700-94	s	IC NJM5532M
Q1	8-729-901-01	s	TRANSISTOR DTC144EK
Q102	8-729-902-99	s	TRANSISTOR DTC114TK-T146
Q103	8-729-902-99	s	TRANSISTOR DTC114TK-T146
Q104	8-729-202-38	s	TRANSISTOR 2SC3326N
Q105	8-729-202-38	s	TRANSISTOR 2SC3326N
Q202	8-729-902-99	s	TRANSISTOR DTC114TK-T146
Q203	8-729-902-99	s	TRANSISTOR DTC114TK-T146
Q204	8-729-202-38	s	TRANSISTOR 2SC3326N
Q205	8-729-202-38	s	TRANSISTOR 2SC3326N
Q302	8-729-902-99	s	TRANSISTOR DTC114TK-T146
Q303	8-729-902-99	s	TRANSISTOR DTC114TK-T146
Q304	8-729-202-38	s	TRANSISTOR 2SC3326N
Q305	8-729-202-38	s	TRANSISTOR 2SC3326N
Q402	8-729-902-99	s	TRANSISTOR DTC114TK-T146
Q403	8-729-902-99	s	TRANSISTOR DTC114TK-T146
Q404	8-729-202-38	s	TRANSISTOR 2SC3326N
Q405	8-729-202-38	s	TRANSISTOR 2SC3326N
R1	1-216-073-00	s	METAL, CHIP 10K 5% 1/10W
R100	1-216-051-00	s	METAL, CHIP 1.2K 5% 1/10W
R101	1-216-051-00	s	METAL, CHIP 1.2K 5% 1/10W
R102	1-208-799-11	s	METAL, CHIP 5.1K 0.5% 1/10W
R103	1-208-799-11	s	METAL, CHIP 5.1K 0.5% 1/10W
R104	1-216-097-00	s	METAL, CHIP 100K 5% 1/10W
R105	1-208-799-11	s	METAL, CHIP 5.1K 0.5% 1/10W
R106	1-208-799-11	s	METAL, CHIP 5.1K 0.5% 1/10W
R107	1-216-097-00	s	METAL, CHIP 100K 5% 1/10W
R108	1-216-687-11	s	METAL, CHIP 33K 0.5% 1/10W
R109-115	1-216-667-11	s	METAL, CHIP 4.7K 0.5% 1/10W
R116	1-208-812-11	s	METAL, CHIP 18K 0.5% 1/10W
R117	1-216-675-11	s	METAL, CHIP 10K 0.5% 1/10W
R118	1-216-667-11	s	METAL, CHIP 4.7K 0.5% 1/10W
R119	1-208-812-11	s	METAL, CHIP 18K 0.5% 1/10W
R120	1-216-675-11	s	METAL, CHIP 10K 0.5% 1/10W
R121	1-216-089-00	s	METAL, CHIP 47K 5% 1/10W
R122	1-208-799-11	s	METAL, CHIP 5.1K 0.5% 1/10W
R123	1-208-811-11	s	METAL, CHIP 16K 0.5% 1/10W
R124	1-216-631-11	s	METAL, CHIP 150 0.5% 1/10W
R125	1-208-799-11	s	METAL, CHIP 5.1K 0.5% 1/10W
R126	1-208-811-11	s	METAL, CHIP 16K 0.5% 1/10W
R127	1-216-017-00	s	METAL, CHIP 47 5% 1/10W
R128	1-208-799-11	s	METAL, CHIP 5.1K 0.5% 1/10W
R129	1-208-799-11	s	METAL, CHIP 5.1K 0.5% 1/10W
R130	1-208-771-11	s	METAL, CHIP 360 0.5% 1/10W
R131	1-208-811-11	s	METAL, CHIP 16K 0.5% 1/10W
R132	1-208-811-11	s	METAL, CHIP 16K 0.5% 1/10W
R133	1-216-017-00	s	METAL, CHIP 47 5% 1/10W
R134	1-216-073-00	s	METAL, CHIP 10K 5% 1/10W
R135	1-216-073-00	s	METAL, CHIP 10K 5% 1/10W
R136	1-216-067-00	s	METAL, CHIP 5.6K 5% 1/10W

(CP-247 BOARD(SVO-5800P))

Ref. No. or Q'ty	Part No.	SP	Description
R137	1-216-067-00	s	METAL, CHIP 5.6K 5% 1/10W
R140	1-216-295-91	s	RES, CHIP 0
R142	1-216-295-91	s	RES, CHIP 0
R144	1-216-295-91	s	RES, CHIP 0
R146	1-216-295-91	s	RES, CHIP 0
R200	1-216-051-00	s	METAL, CHIP 1.2K 5% 1/10W
R201	1-216-051-00	s	METAL, CHIP 1.2K 5% 1/10W
R202	1-208-799-11	s	METAL, CHIP 5.1K 0.5% 1/10W
R203	1-208-799-11	s	METAL, CHIP 5.1K 0.5% 1/10W
R204	1-216-097-00	s	METAL, CHIP 100K 5% 1/10W
R205	1-208-799-11	s	METAL, CHIP 5.1K 0.5% 1/10W
R206	1-208-799-11	s	METAL, CHIP 5.1K 0.5% 1/10W
R207	1-216-097-00	s	METAL, CHIP 100K 5% 1/10W
R208	1-216-687-11	s	METAL, CHIP 33K 0.5% 1/10W
R209-215	1-216-667-11	s	METAL, CHIP 4.7K 0.5% 1/10W
R216	1-208-812-11	s	METAL, CHIP 18K 0.5% 1/10W
R217	1-216-675-11	s	METAL, CHIP 10K 0.5% 1/10W
R218	1-216-667-11	s	METAL, CHIP 4.7K 0.5% 1/10W
R219	1-208-812-11	s	METAL, CHIP 18K 0.5% 1/10W
R220	1-216-675-11	s	METAL, CHIP 10K 0.5% 1/10W
R221	1-216-089-00	s	METAL, CHIP 47K 5% 1/10W
R222	1-208-799-11	s	METAL, CHIP 5.1K 0.5% 1/10W
R223	1-208-811-11	s	METAL, CHIP 16K 0.5% 1/10W
R224	1-216-631-11	s	METAL, CHIP 150 0.5% 1/10W
R225	1-208-799-11	s	METAL, CHIP 5.1K 0.5% 1/10W
R226	1-208-811-11	s	METAL, CHIP 16K 0.5% 1/10W
R227	1-216-017-00	s	METAL, CHIP 47 5% 1/10W
R228	1-208-799-11	s	METAL, CHIP 5.1K 0.5% 1/10W
R229	1-208-799-11	s	METAL, CHIP 5.1K 0.5% 1/10W
R230	1-208-771-11	s	METAL, CHIP 360 0.5% 1/10W
R231	1-208-811-11	s	METAL, CHIP 16K 0.5% 1/10W
R232	1-208-811-11	s	METAL, CHIP 16K 0.5% 1/10W
R233	1-216-017-00	s	METAL, CHIP 47 5% 1/10W
R234	1-216-073-00	s	METAL, CHIP 10K 5% 1/10W
R235	1-216-073-00	s	METAL, CHIP 10K 5% 1/10W
R236	1-216-067-00	s	METAL, CHIP 5.6K 5% 1/10W
R237	1-216-067-00	s	METAL, CHIP 5.6K 5% 1/10W
R240	1-216-295-91	s	RES, CHIP 0
R242	1-216-295-91	s	RES, CHIP 0
R244	1-216-295-91	s	RES, CHIP 0
R246	1-216-295-91	s	RES, CHIP 0
R300	1-216-051-00	s	METAL, CHIP 1.2K 5% 1/10W
R301	1-216-051-00	s	METAL, CHIP 1.2K 5% 1/10W
R302	1-208-799-11	s	METAL, CHIP 5.1K 0.5% 1/10W
R303	1-208-799-11	s	METAL, CHIP 5.1K 0.5% 1/10W
R304	1-216-097-00	s	METAL, CHIP 100K 5% 1/10W
R305	1-208-799-11	s	METAL, CHIP 5.1K 0.5% 1/10W
R306	1-208-799-11	s	METAL, CHIP 5.1K 0.5% 1/10W
R307	1-216-097-00	s	METAL, CHIP 100K 5% 1/10W
R308	1-216-687-11	s	METAL, CHIP 33K 0.5% 1/10W
R309-315	1-216-667-11	s	METAL, CHIP 4.7K 0.5% 1/10W
R316	1-208-812-11	s	METAL, CHIP 18K 0.5% 1/10W
R317	1-216-675-11	s	METAL, CHIP 10K 0.5% 1/10W
R318	1-216-667-11	s	METAL, CHIP 4.7K 0.5% 1/10W
R319	1-208-812-11	s	METAL, CHIP 18K 0.5% 1/10W
R320	1-216-675-11	s	METAL, CHIP 10K 0.5% 1/10W
R321	1-216-089-00	s	METAL, CHIP 47K 5% 1/10W
R322	1-208-799-11	s	METAL, CHIP 5.1K 0.5% 1/10W
R323	1-208-811-11	s	METAL, CHIP 16K 0.5% 1/10W

(CP-247 BOARD(SVO-5800P))

Ref. No. or Q'ty	Part No.	SP	Description
R324	1-216-631-11	s	METAL, CHIP 150 0.5% 1/10W
R325	1-208-799-11	s	METAL, CHIP 5.1K 0.5% 1/10W
R326	1-208-811-11	s	METAL, CHIP 16K 0.5% 1/10W
R327	1-216-017-00	s	METAL, CHIP 47 5% 1/10W
R328	1-208-799-11	s	METAL, CHIP 5.1K 0.5% 1/10W
R329	1-208-799-11	s	METAL, CHIP 5.1K 0.5% 1/10W
R330	1-208-771-11	s	METAL, CHIP 360 0.5% 1/10W
R331	1-208-811-11	s	METAL, CHIP 16K 0.5% 1/10W
R332	1-208-811-11	s	METAL, CHIP 16K 0.5% 1/10W
R333	1-216-017-00	s	METAL, CHIP 47 5% 1/10W
R334	1-216-073-00	s	METAL, CHIP 10K 5% 1/10W
R335	1-216-073-00	s	METAL, CHIP 10K 5% 1/10W
R336	1-216-067-00	s	METAL, CHIP 5.6K 5% 1/10W
R337	1-216-067-00	s	METAL, CHIP 5.6K 5% 1/10W
R340	1-216-295-91	s	RES, CHIP 0
R342	1-216-295-91	s	RES, CHIP 0
R344	1-216-295-91	s	RES, CHIP 0
R346	1-216-295-91	s	RES, CHIP 0
R400	1-216-051-00	s	METAL, CHIP 1.2K 5% 1/10W
R401	1-216-051-00	s	METAL, CHIP 1.2K 5% 1/10W
R402	1-208-799-11	s	METAL, CHIP 5.1K 0.5% 1/10W
R403	1-208-799-11	s	METAL, CHIP 5.1K 0.5% 1/10W
R404	1-216-097-00	s	METAL, CHIP 100K 5% 1/10W
R405	1-208-799-11	s	METAL, CHIP 5.1K 0.5% 1/10W
R406	1-208-799-11	s	METAL, CHIP 5.1K 0.5% 1/10W
R407	1-216-097-00	s	METAL, CHIP 100K 5% 1/10W
R408	1-216-687-11	s	METAL, CHIP 33K 0.5% 1/10W
R409-415	1-216-667-11	s	METAL, CHIP 4.7K 0.5% 1/10W
R416	1-208-812-11	s	METAL, CHIP 18K 0.5% 1/10W
R417	1-216-675-11	s	METAL, CHIP 10K 0.5% 1/10W
R418	1-216-667-11	s	METAL, CHIP 4.7K 0.5% 1/10W
R419	1-208-812-11	s	METAL, CHIP 18K 0.5% 1/10W
R420	1-216-675-11	s	METAL, CHIP 10K 0.5% 1/10W
R421	1-216-089-00	s	METAL, CHIP 47K 5% 1/10W
R422	1-208-799-11	s	METAL, CHIP 5.1K 0.5% 1/10W
R423	1-208-811-11	s	METAL, CHIP 16K 0.5% 1/10W
R424	1-216-631-11	s	METAL, CHIP 150 0.5% 1/10W
R425	1-208-799-11	s	METAL, CHIP 5.1K 0.5% 1/10W
R426	1-208-811-11	s	METAL, CHIP 16K 0.5% 1/10W
R427	1-216-017-00	s	METAL, CHIP 47 5% 1/10W
R428	1-208-799-11	s	METAL, CHIP 5.1K 0.5% 1/10W
R429	1-208-799-11	s	METAL, CHIP 5.1K 0.5% 1/10W
R430	1-208-771-11	s	METAL, CHIP 360 0.5% 1/10W
R431	1-208-811-11	s	METAL, CHIP 16K 0.5% 1/10W
R432	1-208-811-11	s	METAL, CHIP 16K 0.5% 1/10W
R433	1-216-017-00	s	METAL, CHIP 47 5% 1/10W
R434	1-216-073-00	s	METAL, CHIP 10K 5% 1/10W
R435	1-216-073-00	s	METAL, CHIP 10K 5% 1/10W
R436	1-216-067-00	s	METAL, CHIP 5.6K 5% 1/10W
R437	1-216-067-00	s	METAL, CHIP 5.6K 5% 1/10W
R440	1-216-295-91	s	RES, CHIP 0
R442	1-216-295-91	s	RES, CHIP 0
R444	1-216-295-91	s	RES, CHIP 0
R446	1-216-295-91	s	RES, CHIP 0
S1	1-572-374-11	s	SWITCH, SLIDE
S2	1-572-374-11	s	SWITCH, SLIDE
S3	1-572-374-11	s	SWITCH, SLIDE
S100	1-553-510-00	s	SWITCH, SLIDE
S200	1-553-510-00	s	SWITCH, SLIDE

(CP-247 BOARD(SVO-5800P))

Ref. No. or Q'ty	Part No.	SP	Description
S300	1-553-510-00	s	SWITCH, SLIDE
S400	1-553-510-00	s	SWITCH, SLIDE

CP-247B BOARD(SVP-5600P)

Ref. No.
or Q'ty Part No. SP Description

CP-247B board is used for SVP-5600P(EK).

1pc	A-8314-430-A	o	MOUNTED CIRCUIT BOARD, CP-247B
1pc	3-171-450-01	o	ADAPTOR, SW
C102	1-126-157-11	s	ELECT 10uF 20% 16V
C103	1-126-933-11	s	ELECT 100uF 20% 16V
C104	1-126-933-11	s	ELECT 100uF 20% 16V
C105	1-126-934-11	s	ELECT 220uF 20% 16V
C106	1-126-934-11	s	ELECT 220uF 20% 16V
C107	1-164-232-11	s	CERAMIC, CHIP 0.01uF 10% 100V
C108	1-164-232-11	s	CERAMIC, CHIP 0.01uF 10% 100V
C202	1-126-157-11	s	ELECT 10uF 20% 16V
C203	1-126-933-11	s	ELECT 100uF 20% 16V
C204	1-126-933-11	s	ELECT 100uF 20% 16V
C205	1-126-934-11	s	ELECT 220uF 20% 16V
C206	1-126-934-11	s	ELECT 220uF 20% 16V
C207	1-164-232-11	s	CERAMIC, CHIP 0.01uF 10% 100V
C208	1-164-232-11	s	CERAMIC, CHIP 0.01uF 10% 100V
C302	1-126-157-11	s	ELECT 10uF 20% 16V
C303	1-126-933-11	s	ELECT 100uF 20% 16V
C304	1-126-933-11	s	ELECT 100uF 20% 16V
C305	1-126-934-11	s	ELECT 220uF 20% 16V
C306	1-126-934-11	s	ELECT 220uF 20% 16V
C307	1-164-232-11	s	CERAMIC, CHIP 0.01uF 10% 100V
C308	1-164-232-11	s	CERAMIC, CHIP 0.01uF 10% 100V
C402	1-126-157-11	s	ELECT 10uF 20% 16V
C403	1-126-933-11	s	ELECT 100uF 20% 16V
C404	1-126-933-11	s	ELECT 100uF 20% 16V
C405	1-126-934-11	s	ELECT 220uF 20% 16V
C406	1-126-934-11	s	ELECT 220uF 20% 16V
C407	1-164-232-11	s	CERAMIC, CHIP 0.01uF 10% 100V
C408	1-164-232-11	s	CERAMIC, CHIP 0.01uF 10% 100V
CN3	1-750-785-11	s	CONNECTOR, XLR 3P, MALE
CN4	1-750-785-11	s	CONNECTOR, XLR 3P, MALE
CN701	1-766-789-11	o	CONNECTOR, BB 10P, MALE
CN702	1-766-789-11	o	CONNECTOR, BB 10P, MALE
CN703	1-766-789-11	o	CONNECTOR, BB 10P, MALE
IC102	8-759-700-94	s	IC NJM5532M
IC103	8-759-711-82	s	IC NJM4580E(T2)
IC202	8-759-700-94	s	IC NJM5532M
IC302	8-759-700-94	s	IC NJM5532M
IC303	8-759-711-82	s	IC NJM4580E(T2)
IC402	8-759-700-94	s	IC NJM5532M
Q102	8-729-902-99	s	TRANSISTOR DTC114TK-T146
Q103	8-729-902-99	s	TRANSISTOR DTC114TK-T146
Q104	8-729-202-38	s	TRANSISTOR 2SC3326N
Q105	8-729-202-38	s	TRANSISTOR 2SC3326N
Q202	8-729-902-99	s	TRANSISTOR DTC114TK-T146
Q203	8-729-902-99	s	TRANSISTOR DTC114TK-T146
Q204	8-729-202-38	s	TRANSISTOR 2SC3326N
Q205	8-729-202-38	s	TRANSISTOR 2SC3326N
Q302	8-729-902-99	s	TRANSISTOR DTC114TK-T146
Q303	8-729-902-99	s	TRANSISTOR DTC114TK-T146
Q304	8-729-202-38	s	TRANSISTOR 2SC3326N
Q305	8-729-202-38	s	TRANSISTOR 2SC3326N
Q402	8-729-902-99	s	TRANSISTOR DTC114TK-T146
Q403	8-729-902-99	s	TRANSISTOR DTC114TK-T146
Q404	8-729-202-38	s	TRANSISTOR 2SC3326N

Ref. No.
or Q'ty Part No. SP Description

Q405	8-729-202-38	s	TRANSISTOR 2SC3326N
R118	1-216-667-11	s	METAL, CHIP 4.7K 0.5% 1/10W
R119	1-208-812-11	s	METAL, CHIP 18K 0.5% 1/10W
R120	1-216-675-11	s	METAL, CHIP 10K 0.5% 1/10W
R121	1-216-089-00	s	METAL, CHIP 47K 5% 1/10W
R122	1-208-799-11	s	METAL, CHIP 5.1K 0.5% 1/10W
R123	1-208-811-11	s	METAL, CHIP 16K 0.5% 1/10W
R124	1-216-631-11	s	METAL, CHIP 150 0.5% 1/10W
R125	1-208-799-11	s	METAL, CHIP 5.1K 0.5% 1/10W
R126	1-208-811-11	s	METAL, CHIP 16K 0.5% 1/10W
R127	1-216-017-00	s	METAL, CHIP 47 5% 1/10W
R128	1-208-799-11	s	METAL, CHIP 5.1K 0.5% 1/10W
R129	1-208-799-11	s	METAL, CHIP 5.1K 0.5% 1/10W
R130	1-208-771-11	s	METAL, CHIP 360 0.5% 1/10W
R131	1-208-811-11	s	METAL, CHIP 16K 0.5% 1/10W
R132	1-208-811-11	s	METAL, CHIP 16K 0.5% 1/10W
R133	1-216-017-00	s	METAL, CHIP 47 5% 1/10W
R134	1-216-073-00	s	METAL, CHIP 10K 5% 1/10W
R135	1-216-073-00	s	METAL, CHIP 10K 5% 1/10W
R136	1-216-067-00	s	METAL, CHIP 5.6K 5% 1/10W
R137	1-216-067-00	s	METAL, CHIP 5.6K 5% 1/10W
R144	1-216-295-91	s	RES, CHIP 0
R146	1-216-295-91	s	RES, CHIP 0
R218	1-216-667-11	s	METAL, CHIP 4.7K 0.5% 1/10W
R219	1-208-812-11	s	METAL, CHIP 18K 0.5% 1/10W
R220	1-216-675-11	s	METAL, CHIP 10K 0.5% 1/10W
R221	1-216-089-00	s	METAL, CHIP 47K 5% 1/10W
R222	1-208-799-11	s	METAL, CHIP 5.1K 0.5% 1/10W
R223	1-208-811-11	s	METAL, CHIP 16K 0.5% 1/10W
R224	1-216-631-11	s	METAL, CHIP 150 0.5% 1/10W
R225	1-208-799-11	s	METAL, CHIP 5.1K 0.5% 1/10W
R226	1-208-811-11	s	METAL, CHIP 16K 0.5% 1/10W
R227	1-216-017-00	s	METAL, CHIP 47 5% 1/10W
R228	1-208-799-11	s	METAL, CHIP 5.1K 0.5% 1/10W
R229	1-208-799-11	s	METAL, CHIP 5.1K 0.5% 1/10W
R230	1-208-771-11	s	METAL, CHIP 360 0.5% 1/10W
R231	1-208-811-11	s	METAL, CHIP 16K 0.5% 1/10W
R232	1-208-811-11	s	METAL, CHIP 16K 0.5% 1/10W
R233	1-216-017-00	s	METAL, CHIP 47 5% 1/10W
R234	1-216-073-00	s	METAL, CHIP 10K 5% 1/10W
R235	1-216-073-00	s	METAL, CHIP 10K 5% 1/10W
R236	1-216-067-00	s	METAL, CHIP 5.6K 5% 1/10W
R237	1-216-067-00	s	METAL, CHIP 5.6K 5% 1/10W
R244	1-216-295-91	s	RES, CHIP 0
R246	1-216-295-91	s	RES, CHIP 0
R318	1-216-667-11	s	METAL, CHIP 4.7K 0.5% 1/10W
R319	1-208-812-11	s	METAL, CHIP 18K 0.5% 1/10W
R320	1-216-675-11	s	METAL, CHIP 10K 0.5% 1/10W
R321	1-216-089-00	s	METAL, CHIP 47K 5% 1/10W
R322	1-208-799-11	s	METAL, CHIP 5.1K 0.5% 1/10W
R323	1-208-811-11	s	METAL, CHIP 16K 0.5% 1/10W
R324	1-216-631-11	s	METAL, CHIP 150 0.5% 1/10W
R325	1-208-799-11	s	METAL, CHIP 5.1K 0.5% 1/10W
R326	1-208-811-11	s	METAL, CHIP 16K 0.5% 1/10W
R327	1-216-017-00	s	METAL, CHIP 47 5% 1/10W
R328	1-208-799-11	s	METAL, CHIP 5.1K 0.5% 1/10W
R329	1-208-799-11	s	METAL, CHIP 5.1K 0.5% 1/10W
R330	1-208-771-11	s	METAL, CHIP 360 0.5% 1/10W

(CP-247B BOARD(SVP-5600P))

Ref. No. or Q'ty	Part No.	SP	Description
R331	1-208-811-11	s	METAL, CHIP 16K 0.5% 1/10W
R332	1-208-811-11	s	METAL, CHIP 16K 0.5% 1/10W
R333	1-216-017-00	s	METAL, CHIP 47 5% 1/10W
R334	1-216-073-00	s	METAL, CHIP 10K 5% 1/10W
R335	1-216-073-00	s	METAL, CHIP 10K 5% 1/10W
R336	1-216-067-00	s	METAL, CHIP 5.6K 5% 1/10W
R337	1-216-067-00	s	METAL, CHIP 5.6K 5% 1/10W
R344	1-216-295-91	s	RES, CHIP 0
R346	1-216-295-91	s	RES, CHIP 0
R418	1-216-667-11	s	METAL, CHIP 4.7K 0.5% 1/10W
R419	1-208-812-11	s	METAL, CHIP 18K 0.5% 1/10W
R420	1-216-675-11	s	METAL, CHIP 10K 0.5% 1/10W
R421	1-216-089-00	s	METAL, CHIP 47K 5% 1/10W
R422	1-208-799-11	s	METAL, CHIP 5.1K 0.5% 1/10W
R423	1-208-811-11	s	METAL, CHIP 16K 0.5% 1/10W
R424	1-216-631-11	s	METAL, CHIP 150 0.5% 1/10W
R425	1-208-799-11	s	METAL, CHIP 5.1K 0.5% 1/10W
R426	1-208-811-11	s	METAL, CHIP 16K 0.5% 1/10W
R427	1-216-017-00	s	METAL, CHIP 47 5% 1/10W
R428	1-208-799-11	s	METAL, CHIP 5.1K 0.5% 1/10W
R429	1-208-799-11	s	METAL, CHIP 5.1K 0.5% 1/10W
R430	1-208-771-11	s	METAL, CHIP 360 0.5% 1/10W
R431	1-208-811-11	s	METAL, CHIP 16K 0.5% 1/10W
R432	1-208-811-11	s	METAL, CHIP 16K 0.5% 1/10W
R433	1-216-017-00	s	METAL, CHIP 47 5% 1/10W
R434	1-216-073-00	s	METAL, CHIP 10K 5% 1/10W
R435	1-216-073-00	s	METAL, CHIP 10K 5% 1/10W
R436	1-216-067-00	s	METAL, CHIP 5.6K 5% 1/10W
R437	1-216-067-00	s	METAL, CHIP 5.6K 5% 1/10W
R444	1-216-295-91	s	RES, CHIP 0
R446	1-216-295-91	s	RES, CHIP 0
S2	1-572-374-11	s	SWITCH, SLIDE

DR-265 BOARD

Ref. No. or Q'ty	Part No.	SP	Description
1pc	A-8314-451-A	o	MOUNTED CIRCUIT BOARD, DR-265
C202	1-124-902-00	s	ELECT 0.47uF 20% 50V
C203	1-124-902-00	s	ELECT 0.47uF 20% 50V
C204	1-124-126-00	s	ELECT 47uF 20% 25V
C206	1-124-902-00	s	ELECT 0.47uF 20% 50V
C207	1-124-902-00	s	ELECT 0.47uF 20% 50V
C208	1-126-943-11	s	ELECT 2200uF 20% 25V
C290	1-126-943-11	s	ELECT 2200uF 20% 25V
C304	1-163-251-11	s	CERAMIC, CHIP 100PF 5% 50V
C305	1-124-903-11	s	ELECT 1uF 20% 50V
C306	1-163-251-11	s	CERAMIC, CHIP 100PF 5% 50V
C307	1-163-275-11	s	CERAMIC, CHIP 0.001uF 5% 50V
C308	1-126-111-11	s	ELECT 3.3uF 20% 100V
C309	1-161-061-11	s	CERAMIC 0.068uF 10% 50V
C310	1-161-061-11	s	CERAMIC 0.068uF 10% 50V
C311	1-163-037-11	s	CERAMIC, CHIP 0.022uF 10% 25V
C312	1-161-061-11	s	CERAMIC 0.068uF 10% 50V
C313	1-126-934-11	s	ELECT 220uF 20% 16V
C501	1-163-251-11	s	CERAMIC, CHIP 100PF 5% 50V
C502	1-163-275-11	s	CERAMIC, CHIP 0.001uF 5% 50V
C503	1-163-251-11	s	CERAMIC, CHIP 100PF 5% 50V
C504	1-163-275-11	s	CERAMIC, CHIP 0.001uF 5% 50V
C505	1-163-275-11	s	CERAMIC, CHIP 0.001uF 5% 50V
C511	1-163-251-11	s	CERAMIC, CHIP 100PF 5% 50V
C512	1-163-275-11	s	CERAMIC, CHIP 0.001uF 5% 50V
C513	1-163-251-11	s	CERAMIC, CHIP 100PF 5% 50V
C514	1-163-275-11	s	CERAMIC, CHIP 0.001uF 5% 50V
C515	1-163-275-11	s	CERAMIC, CHIP 0.001uF 5% 50V
C521	1-130-491-00	s	MYLAR 0.047uF 5% 50V
C522	1-124-126-00	s	ELECT 47uF 20% 25V
C523	1-124-126-00	s	ELECT 47uF 20% 25V
C524	1-163-275-11	s	CERAMIC, CHIP 0.001uF 5% 50V
C525	1-164-232-11	s	CERAMIC, CHIP 0.01uF 10% 100V
C526	1-163-809-11	s	CERAMIC, CHIP 0.047uF 10% 25V
C527	1-124-126-00	s	ELECT 47uF 20% 25V
C528	1-163-037-11	s	CERAMIC, CHIP 0.022uF 10% 25V
C529	1-163-037-11	s	CERAMIC, CHIP 0.022uF 10% 25V
C530	1-163-037-11	s	CERAMIC, CHIP 0.022uF 10% 25V
C531	1-163-037-11	s	CERAMIC, CHIP 0.022uF 10% 25V
C532	1-163-037-11	s	CERAMIC, CHIP 0.022uF 10% 25V
C533	1-163-275-11	s	CERAMIC, CHIP 0.001uF 5% 50V
C534	1-163-037-11	s	CERAMIC, CHIP 0.022uF 10% 25V
C535	1-163-133-00	s	CERAMIC, CHIP 470PF 5% 50V
C536	1-163-037-11	s	CERAMIC, CHIP 0.022uF 10% 25V
C537	1-163-037-11	s	CERAMIC, CHIP 0.022uF 10% 25V
C538	1-163-037-11	s	CERAMIC, CHIP 0.022uF 10% 25V
C539	1-126-964-11	s	ELECT 10uF 20% 50V
C540	1-163-037-11	s	CERAMIC, CHIP 0.022uF 10% 25V
C541	1-130-491-00	s	MYLAR 0.047uF 5% 50V
C542	1-163-037-11	s	CERAMIC, CHIP 0.022uF 10% 25V
C543	1-163-037-11	s	CERAMIC, CHIP 0.022uF 10% 25V
C544	1-163-037-11	s	CERAMIC, CHIP 0.022uF 10% 25V
CN803	1-569-754-11	o	CONNECTOR, BB 18P, FEMALE
CN804	1-569-754-11	o	CONNECTOR, BB 18P, FEMALE
CN805	1-569-754-11	o	CONNECTOR, BB 18P, FEMALE
D201	8-719-104-34	s	DIODE 1S2835
D204	8-719-200-02	s	DIODE 10E2

(DR-265 BOARD)

Ref. No. or Q'ty	Part No.	SP	Description
D205	8-719-801-78	s	DIODE 1S2837-T1
D206	8-719-200-02	s	DIODE 10E2
D207	8-719-157-36	s	DIODE RD6.8M-B
D209	8-719-160-68	s	DIODE RD18FB2
D210	8-719-160-68	s	DIODE RD18FB2
D211	8-719-200-02	s	DIODE 10E2
D215	8-719-801-78	s	DIODE 1S2837-T1
D290	8-719-200-02	s	DIODE 10E2
D501	8-719-104-34	s	DIODE 1S2835
IC303	8-759-234-03	s	IC TA8424F
IC501	8-759-981-96	s	IC RC4560D
IC502	8-759-981-96	s	IC RC4560D
IC503	8-759-981-96	s	IC RC4560D
IC504	8-759-912-77	s	IC LM324N
IC505	8-759-729-03	s	IC NJM2903D
IC506	8-759-909-33	s	IC LM311P
IC507	8-759-040-70	s	IC MC14070BCP
IC509	8-759-140-53	s	IC UPD4053BC
IC510	8-759-708-05	s	IC NJM78L05A
JR1-JR33	1-216-295-91	s	RES, CHIP 0
Q201	8-729-216-22	s	TRANSISTOR 2SA1162
Q202	8-729-216-22	s	TRANSISTOR 2SA1162
Q203	8-729-216-22	s	TRANSISTOR 2SA1162
Q204	8-729-230-49	s	TRANSISTOR 2SC2712-YG
Q205	8-729-230-49	s	TRANSISTOR 2SC2712-YG
Q206	8-729-320-60	s	TRANSISTOR 2SD788-34
Q207	8-729-900-52	s	TRANSISTOR DTC114YK
Q208	8-729-320-60	s	TRANSISTOR 2SD788-34
Q209	8-729-216-22	s	TRANSISTOR 2SA1162
Q210	8-729-216-22	s	TRANSISTOR 2SA1162
Q211	8-729-230-49	s	TRANSISTOR 2SC2712-YG
Q212	8-729-230-49	s	TRANSISTOR 2SC2712-YG
Q213	8-729-901-01	s	TRANSISTOR DTC144EK
Q214	8-729-230-49	s	TRANSISTOR 2SC2712-YG
Q215	8-729-230-49	s	TRANSISTOR 2SC2712-YG
Q216	8-729-900-52	s	TRANSISTOR DTC114YK
Q217	8-729-320-60	s	TRANSISTOR 2SD788-34
Q218	8-729-901-01	s	TRANSISTOR DTC144EK
Q219	8-729-320-60	s	TRANSISTOR 2SD788-34
Q521	8-729-230-49	s	TRANSISTOR 2SC2712-YG
Q523	8-729-140-96	s	TRANSISTOR 2SD774-4
Q524	8-729-024-95	s	TRANSISTOR 2SB1565EF
R201	1-216-073-00	s	METAL, CHIP 10K 5% 1/10W
R202	1-216-061-00	s	METAL, CHIP 3.3K 5% 1/10W
R203	1-216-061-00	s	METAL, CHIP 3.3K 5% 1/10W
R204	1-216-091-00	s	METAL, CHIP 56K 5% 1/10W
R205	1-216-091-00	s	METAL, CHIP 56K 5% 1/10W
R206	1-216-065-00	s	METAL, CHIP 4.7K 5% 1/10W
R207	1-216-073-00	s	METAL, CHIP 10K 5% 1/10W
R208	1-216-091-00	s	METAL, CHIP 56K 5% 1/10W
R209	1-216-091-00	s	METAL, CHIP 56K 5% 1/10W
R210	1-216-045-00	s	METAL, CHIP 680 5% 1/10W
R211	1-216-045-00	s	METAL, CHIP 680 5% 1/10W
R212-216	1-216-073-00	s	METAL, CHIP 10K 5% 1/10W
R217	1-216-061-00	s	METAL, CHIP 3.3K 5% 1/10W
R218	1-216-091-00	s	METAL, CHIP 56K 5% 1/10W
R219	1-216-073-00	s	METAL, CHIP 10K 5% 1/10W

(DR-265 BOARD)

Ref. No. or Q'ty	Part No.	SP	Description
R220	1-216-061-00	s	METAL, CHIP 3.3K 5% 1/10W
R221	1-216-091-00	s	METAL, CHIP 56K 5% 1/10W
R222	1-216-073-00	s	METAL, CHIP 10K 5% 1/10W
R223	1-216-073-00	s	METAL, CHIP 10K 5% 1/10W
R224	1-216-091-00	s	METAL, CHIP 56K 5% 1/10W
R225	1-216-091-00	s	METAL, CHIP 56K 5% 1/10W
R227	1-216-073-00	s	METAL, CHIP 10K 5% 1/10W
R228	1-216-073-00	s	METAL, CHIP 10K 5% 1/10W
R229	1-216-045-00	s	METAL, CHIP 680 5% 1/10W
R230	1-216-045-00	s	METAL, CHIP 680 5% 1/10W
R232	1-216-073-00	s	METAL, CHIP 10K 5% 1/10W
R233	1-216-073-00	s	METAL, CHIP 10K 5% 1/10W
R308	1-216-049-00	s	METAL, CHIP 1K 5% 1/10W
R309	1-216-031-00	s	METAL, CHIP 180 5% 1/10W
R310	1-216-109-00	s	METAL, CHIP 330K 5% 1/10W
R311	1-220-228-11	s	METAL, CHIP 1.5 10% 1/4W
R312	1-220-228-11	s	METAL, CHIP 1.5 10% 1/4W
R313	1-220-228-11	s	METAL, CHIP 1.5 10% 1/4W
R314	1-216-027-00	s	METAL, CHIP 120 5% 1/10W
R318	1-249-377-11	s	CARBON 0.47 5% 1/4W
R501	1-216-073-00	s	METAL, CHIP 10K 5% 1/10W
R502	1-216-073-00	s	METAL, CHIP 10K 5% 1/10W
R503	1-216-105-91	s	METAL, CHIP 220K 5% 1/10W
R504	1-216-073-00	s	METAL, CHIP 10K 5% 1/10W
R505	1-216-073-00	s	METAL, CHIP 10K 5% 1/10W
R506	1-216-089-00	s	METAL, CHIP 47K 5% 1/10W
R507	1-216-073-00	s	METAL, CHIP 10K 5% 1/10W
R508	1-216-073-00	s	METAL, CHIP 10K 5% 1/10W
R509	1-216-113-00	s	METAL, CHIP 470K 5% 1/10W
R510	1-216-065-00	s	METAL, CHIP 4.7K 5% 1/10W
R511	1-216-073-00	s	METAL, CHIP 10K 5% 1/10W
R512	1-216-073-00	s	METAL, CHIP 10K 5% 1/10W
R513	1-216-105-91	s	METAL, CHIP 220K 5% 1/10W
R514	1-216-073-00	s	METAL, CHIP 10K 5% 1/10W
R515	1-216-073-00	s	METAL, CHIP 10K 5% 1/10W
R516	1-216-089-00	s	METAL, CHIP 47K 5% 1/10W
R517	1-216-073-00	s	METAL, CHIP 10K 5% 1/10W
R518	1-216-073-00	s	METAL, CHIP 10K 5% 1/10W
R519	1-216-049-00	s	METAL, CHIP 1K 5% 1/10W
R520	1-216-065-00	s	METAL, CHIP 4.7K 5% 1/10W
R521	1-216-089-00	s	METAL, CHIP 47K 5% 1/10W
R522	1-216-073-00	s	METAL, CHIP 10K 5% 1/10W
R523	1-216-089-00	s	METAL, CHIP 47K 5% 1/10W
R524	1-216-105-91	s	METAL, CHIP 220K 5% 1/10W
R525	1-216-113-00	s	METAL, CHIP 470K 5% 1/10W
R526	1-216-073-00	s	METAL, CHIP 10K 5% 1/10W
R527	1-216-081-00	s	METAL, CHIP 22K 5% 1/10W
R528	1-216-073-00	s	METAL, CHIP 10K 5% 1/10W
R529	1-216-073-00	s	METAL, CHIP 10K 5% 1/10W
R530	1-216-089-00	s	METAL, CHIP 47K 5% 1/10W
R531	1-216-089-00	s	METAL, CHIP 47K 5% 1/10W
R532	1-216-081-00	s	METAL, CHIP 22K 5% 1/10W
R533	1-216-073-00	s	METAL, CHIP 10K 5% 1/10W
R535	1-216-065-00	s	METAL, CHIP 4.7K 5% 1/10W
R538	1-216-065-00	s	METAL, CHIP 4.7K 5% 1/10W
R539	1-216-065-00	s	METAL, CHIP 4.7K 5% 1/10W
R540	1-216-113-00	s	METAL, CHIP 470K 5% 1/10W
R541	1-216-089-00	s	METAL, CHIP 47K 5% 1/10W
R542	1-216-065-00	s	METAL, CHIP 4.7K 5% 1/10W

(DR-265 BOARD)

Ref. No. or Q'ty	Part No.	SP	Description
R543	1-216-089-00	s	METAL, CHIP 47K 5% 1/10W
R544	1-216-065-00	s	METAL, CHIP 4.7K 5% 1/10W
R545	⚠ 1-216-345-11	s	METAL 0.47 5% 1W
R546	1-216-089-00	s	METAL, CHIP 47K 5% 1/10W
R547	1-216-667-11	s	METAL, CHIP 4.7K 0.5% 1/10W
R548	1-216-667-11	s	METAL, CHIP 4.7K 0.5% 1/10W
R549	1-216-049-00	s	METAL, CHIP 1K 5% 1/10W
R550	1-216-033-00	s	METAL, CHIP 220 5% 1/10W
R552	1-216-097-00	s	METAL, CHIP 100K 5% 1/10W
R553	1-216-097-00	s	METAL, CHIP 100K 5% 1/10W
RB501	1-233-235-11	s	RESISTOR BLOCK, CHIP 10Kx4
RB502	1-233-235-11	s	RESISTOR BLOCK, CHIP 10Kx4

DR-266 BOARD

Ref. No. or Q'ty	Part No.	SP	Description
1pc	A-8314-450-A	o	MOUNTED CIRCUIT BOARD, DR-266
C104	1-163-037-11	s	CERAMIC, CHIP 0.022uF 10% 25V
C105	1-163-037-11	s	CERAMIC, CHIP 0.022uF 10% 25V
C106	1-104-663-11	s	ELECT 33uF 20% 25V
C107	1-163-037-11	s	CERAMIC, CHIP 0.022uF 10% 25V
C108	1-104-663-11	s	ELECT 33uF 20% 25V
C109	1-163-037-11	s	CERAMIC, CHIP 0.022uF 10% 25V
C110	1-163-037-11	s	CERAMIC, CHIP 0.022uF 10% 25V
C111	1-104-663-11	s	ELECT 33uF 20% 25V
C112	1-163-037-11	s	CERAMIC, CHIP 0.022uF 10% 25V
C113	1-104-663-11	s	ELECT 33uF 20% 25V
C114	1-164-232-11	s	CERAMIC, CHIP 0.01uF 10% 100V
C115	1-163-133-00	s	CERAMIC, CHIP 470PF 5% 50V
C116	1-124-903-11	s	ELECT 1uF 20% 50V
C117	1-163-133-00	s	CERAMIC, CHIP 470PF 5% 50V
C118	1-164-232-11	s	CERAMIC, CHIP 0.01uF 10% 100V
C121	1-163-037-11	s	CERAMIC, CHIP 0.022uF 10% 25V
C401	1-163-809-11	s	CERAMIC, CHIP 0.047uF 10% 25V
C402	1-104-665-11	s	ELECT 100uF 20% 25V
C403	1-163-037-11	s	CERAMIC, CHIP 0.022uF 10% 25V
C404	1-163-133-00	s	CERAMIC, CHIP 470PF 5% 50V
C405	1-126-964-11	s	ELECT 10uF 20% 50V
C406	1-131-353-00	s	TANTALUM 10uF 10% 35V
C407	1-131-353-00	s	TANTALUM 10uF 10% 35V
C408	1-130-495-00	s	MYLAR 0.1uF 5% 50V
C409	1-104-666-11	s	ELECT 220uF 20% 25V
C410	1-163-017-00	s	CERAMIC, CHIP 0.0047uF 5% 50V
C411	1-131-348-00	s	TANTALUM 1.5uF 10% 35V
C412	1-131-348-00	s	TANTALUM 1.5uF 10% 35V
C413	1-163-125-00	s	CERAMIC, CHIP 220PF 5% 50V
C414	1-163-037-11	s	CERAMIC, CHIP 0.022uF 10% 25V
C415	1-163-133-00	s	CERAMIC, CHIP 470PF 5% 50V
C416	1-163-033-91	s	CERAMIC, CHIP 0.022uF 50V
C417	1-126-111-11	s	ELECT 3.3uF 20% 100V
C418	1-163-131-00	s	CERAMIC, CHIP 390PF 5% 50V
C419	1-163-037-11	s	CERAMIC, CHIP 0.022uF 10% 25V
C420	1-163-275-11	s	CERAMIC, CHIP 0.001uF 5% 50V
C421	1-163-809-11	s	CERAMIC, CHIP 0.047uF 10% 25V
C422	1-104-665-11	s	ELECT 100uF 20% 25V
C423	1-163-133-00	s	CERAMIC, CHIP 470PF 5% 50V
C424	1-163-037-11	s	CERAMIC, CHIP 0.022uF 10% 25V
C425	1-104-666-11	s	ELECT 220uF 20% 25V
C426	1-163-017-00	s	CERAMIC, CHIP 0.0047uF 5% 50V
C427	1-130-495-00	s	MYLAR 0.1uF 5% 50V
C428	1-163-275-11	s	CERAMIC, CHIP 0.001uF 5% 50V
C429	1-131-350-00	s	TANTALUM 3.3uF 10% 35V
C430	1-126-966-11	s	ELECT 33uF 20% 50V
C431	1-126-966-11	s	ELECT 33uF 20% 50V
C432	1-126-111-11	s	ELECT 3.3uF 20% 100V
C433	1-126-111-11	s	ELECT 3.3uF 20% 100V
C434	1-163-037-11	s	CERAMIC, CHIP 0.022uF 10% 25V
C435	1-163-037-11	s	CERAMIC, CHIP 0.022uF 10% 25V
C438	1-163-133-00	s	CERAMIC, CHIP 470PF 5% 50V
C439	1-163-133-00	s	CERAMIC, CHIP 470PF 5% 50V
C440	1-163-275-11	s	CERAMIC, CHIP 0.001uF 5% 50V
C441	1-131-350-00	s	TANTALUM 3.3uF 10% 35V
C444	1-163-037-11	s	CERAMIC, CHIP 0.022uF 10% 25V
C445	1-163-037-11	s	CERAMIC, CHIP 0.022uF 10% 25V

(DR-266 BOARD)

Ref. No. or Q'ty	Part No.	SP	Description
C446	1-126-964-11	s	ELECT 10uF 20% 50V
C449	1-163-037-11	s	CERAMIC, CHIP 0.022uF 10% 25V
C701	1-163-275-11	s	CERAMIC, CHIP 0.001uF 5% 50V
C702	1-124-903-11	s	ELECT 1uF 20% 50V
C703	1-124-903-11	s	ELECT 1uF 20% 50V
C704	1-124-126-00	s	ELECT 47uF 20% 25V
C705	1-163-037-11	s	CERAMIC, CHIP 0.022uF 10% 25V
C706	1-163-133-00	s	CERAMIC, CHIP 470PF 5% 50V
C707	1-163-275-11	s	CERAMIC, CHIP 0.001uF 5% 50V
C709	1-163-037-11	s	CERAMIC, CHIP 0.022uF 10% 25V
C710	1-124-126-00	s	ELECT 47uF 20% 25V
C711	1-163-037-11	s	CERAMIC, CHIP 0.022uF 10% 25V
C713	1-163-037-11	s	CERAMIC, CHIP 0.022uF 10% 25V
C714	1-163-037-11	s	CERAMIC, CHIP 0.022uF 10% 25V
CN800	1-569-754-11	o	CONNECTOR, BB 18P, FEMALE
CN801	1-569-754-11	o	CONNECTOR, BB 18P, FEMALE
CN802	1-569-754-11	o	CONNECTOR, BB 18P, FEMALE
D402	8-719-981-00	s	DIODE ERC81-004
D403	8-719-106-43	s	DIODE RD9.1M-T1B
D405	8-719-800-76	s	DIODE 1SS226
D406	8-719-800-76	s	DIODE 1SS226
D407	8-719-981-00	s	DIODE ERC81-004
D408	8-719-106-53	s	DIODE RD10M-B2
D701	8-719-801-78	s	DIODE 1S2837-T1
IC102	8-759-729-03	s	IC NJM2903D
IC103	8-759-729-03	s	IC NJM2903D
IC104	8-759-729-03	s	IC NJM2903D
IC401	8-759-912-77	s	IC LM324N
IC403	8-759-140-53	s	IC UPD4053BC
IC404	8-759-984-03	s	IC LM339N
IC405	8-759-912-77	s	IC LM324N
IC408	8-759-634-96	s	IC M5207L05
IC409	8-759-179-74	s	IC M62354P
IC410	8-759-135-80	s	IC UPC358C
IC701	8-759-340-13	s	IC HD14013BP
IC702	8-759-045-38	s	IC MC14538BCP
IC703	8-759-329-38	s	IC UPD75108CW-X06
IC704	8-759-179-74	s	IC M62354P
JR1-JR57	1-216-295-91	s	RES, CHIP 0
L401	1-408-519-00	s	COIL, CHOKE
L402	1-408-519-00	s	COIL, CHOKE
L701	1-410-645-31	s	INDUCTOR 100uH
Q110	8-729-216-22	s	TRANSISTOR 2SA1162
Q111	8-729-901-01	s	TRANSISTOR DTC144EK
Q400	8-729-901-01	s	TRANSISTOR DTC144EK
Q401	8-729-804-86	s	TRANSISTOR 2SB1142-S
Q402	8-729-216-22	s	TRANSISTOR 2SA1162
Q403	8-729-230-49	s	TRANSISTOR 2SC2712-YG
Q404	8-729-901-01	s	TRANSISTOR DTC144EK
Q405	8-729-216-22	s	TRANSISTOR 2SA1162
Q406	8-729-804-86	s	TRANSISTOR 2SB1142-S
Q407	8-729-216-22	s	TRANSISTOR 2SA1162
Q408	8-729-901-01	s	TRANSISTOR DTC144EK
Q409	8-729-901-01	s	TRANSISTOR DTC144EK
Q410	8-729-901-06	s	TRANSISTOR DTA144EK
Q411	8-729-230-49	s	TRANSISTOR 2SC2712-YG
Q412	8-729-901-01	s	TRANSISTOR DTC144EK

(DR-266 BOARD)

Ref. No. or Q'ty	Part No.	SP	Description
Q701	8-729-216-22	s	TRANSISTOR 2SA1162
Q702	8-729-901-01	s	TRANSISTOR DTC144EK
Q703	8-729-901-01	s	TRANSISTOR DTC144EK
R102	1-216-053-00	s	METAL, CHIP 1.5K 5% 1/10W
R103	1-216-089-00	s	METAL, CHIP 47K 5% 1/10W
R104	1-216-089-00	s	METAL, CHIP 47K 5% 1/10W
R105	1-216-073-00	s	METAL, CHIP 10K 5% 1/10W
R109	1-216-121-00	s	METAL, CHIP 1M 5% 1/10W
R110	1-216-061-00	s	METAL, CHIP 3.3K 5% 1/10W
R111	1-216-065-00	s	METAL, CHIP 4.7K 5% 1/10W
R112	1-216-121-00	s	METAL, CHIP 1M 5% 1/10W
R113	1-216-061-00	s	METAL, CHIP 3.3K 5% 1/10W
R114	1-216-065-00	s	METAL, CHIP 4.7K 5% 1/10W
R115	1-216-121-00	s	METAL, CHIP 1M 5% 1/10W
R116	1-216-061-00	s	METAL, CHIP 3.3K 5% 1/10W
R117	1-216-065-00	s	METAL, CHIP 4.7K 5% 1/10W
R118	1-216-121-00	s	METAL, CHIP 1M 5% 1/10W
R119	1-216-061-00	s	METAL, CHIP 3.3K 5% 1/10W
R120	1-216-065-00	s	METAL, CHIP 4.7K 5% 1/10W
R121	1-216-065-00	s	METAL, CHIP 4.7K 5% 1/10W
R122	1-216-061-00	s	METAL, CHIP 3.3K 5% 1/10W
R123	1-216-061-00	s	METAL, CHIP 3.3K 5% 1/10W
R124	1-216-073-00	s	METAL, CHIP 10K 5% 1/10W
R125	1-216-097-00	s	METAL, CHIP 100K 5% 1/10W
R126	1-216-065-00	s	METAL, CHIP 4.7K 5% 1/10W
R127	1-216-121-00	s	METAL, CHIP 1M 5% 1/10W
R128	1-216-097-00	s	METAL, CHIP 100K 5% 1/10W
R129	1-216-041-00	s	METAL, CHIP 470 5% 1/10W
R130	1-216-065-00	s	METAL, CHIP 4.7K 5% 1/10W
R131	1-216-121-00	s	METAL, CHIP 1M 5% 1/10W
R132	1-216-065-00	s	METAL, CHIP 4.7K 5% 1/10W
R133	1-216-073-00	s	METAL, CHIP 10K 5% 1/10W
R137	1-216-065-00	s	METAL, CHIP 4.7K 5% 1/10W
R138	1-216-065-00	s	METAL, CHIP 4.7K 5% 1/10W
R139	1-216-065-00	s	METAL, CHIP 4.7K 5% 1/10W
R140	1-216-065-00	s	METAL, CHIP 4.7K 5% 1/10W
R402	1-216-073-00	s	METAL, CHIP 10K 5% 1/10W
R403	1-216-035-00	s	METAL, CHIP 270 5% 1/10W
R404	1-216-097-00	s	METAL, CHIP 100K 5% 1/10W
R405	1-216-121-00	s	METAL, CHIP 1M 5% 1/10W
R406	1-216-121-00	s	METAL, CHIP 1M 5% 1/10W
R407	1-216-682-11	s	METAL, CHIP 20K 0.5% 1/10W
R408	1-216-045-00	s	METAL, CHIP 680 5% 1/10W
R409	1-216-085-00	s	METAL, CHIP 33K 5% 1/10W
R410	1-216-089-00	s	METAL, CHIP 47K 5% 1/10W
R411	1-216-109-00	s	METAL, CHIP 330K 5% 1/10W
R412	1-216-061-00	s	METAL, CHIP 3.3K 5% 1/10W
R413	1-216-065-00	s	METAL, CHIP 4.7K 5% 1/10W
R414	1-216-085-00	s	METAL, CHIP 33K 5% 1/10W
R415	1-216-073-00	s	METAL, CHIP 10K 5% 1/10W
R416	1-216-113-00	s	METAL, CHIP 470K 5% 1/10W
R417	1-216-113-00	s	METAL, CHIP 470K 5% 1/10W
R418	1-216-109-00	s	METAL, CHIP 330K 5% 1/10W
R419	1-216-089-00	s	METAL, CHIP 47K 5% 1/10W
R420	1-216-065-00	s	METAL, CHIP 4.7K 5% 1/10W
R421	1-216-089-00	s	METAL, CHIP 47K 5% 1/10W
R422	1-216-089-00	s	METAL, CHIP 47K 5% 1/10W
R423	1-216-061-00	s	METAL, CHIP 3.3K 5% 1/10W

(DR-266 BOARD)

Ref. No. or Q'ty	Part No.	SP	Description
R424	1-216-081-00	s	METAL, CHIP 22K 5% 1/10W
R425	1-216-097-00	s	METAL, CHIP 100K 5% 1/10W
R426	1-216-049-00	s	METAL, CHIP 1K 5% 1/10W
R427	1-216-105-91	s	METAL, CHIP 220K 5% 1/10W
R428	1-216-065-00	s	METAL, CHIP 4.7K 5% 1/10W
R429	1-216-073-00	s	METAL, CHIP 10K 5% 1/10W
R430	1-216-073-00	s	METAL, CHIP 10K 5% 1/10W
R431	1-216-113-00	s	METAL, CHIP 470K 5% 1/10W
R432	1-216-069-00	s	METAL, CHIP 6.8K 5% 1/10W
R433	1-216-057-00	s	METAL, CHIP 2.2K 5% 1/10W
R434	1-218-818-11	s	METAL, CHIP 220 5% 1/2W
R435	1-216-033-00	s	METAL, CHIP 220 5% 1/10W
R436	1-216-097-00	s	METAL, CHIP 100K 5% 1/10W
R437	1-216-049-00	s	METAL, CHIP 1K 5% 1/10W
R438	1-216-097-00	s	METAL, CHIP 100K 5% 1/10W
R439	1-216-073-00	s	METAL, CHIP 10K 5% 1/10W
R440	1-216-073-00	s	METAL, CHIP 10K 5% 1/10W
R441	⚠ 1-216-345-11	s	METAL 0.47 5% 1W
R442	1-216-097-00	s	METAL, CHIP 100K 5% 1/10W
R443	1-216-675-11	s	METAL, CHIP 10K 0.5% 1/10W
R444	1-216-105-91	s	METAL, CHIP 220K 5% 1/10W
R445	1-216-089-00	s	METAL, CHIP 47K 5% 1/10W
R446	1-216-073-00	s	METAL, CHIP 10K 5% 1/10W
R447	1-216-065-00	s	METAL, CHIP 4.7K 5% 1/10W
R448	1-216-073-00	s	METAL, CHIP 10K 5% 1/10W
R449	1-216-113-00	s	METAL, CHIP 470K 5% 1/10W
R450	1-216-069-00	s	METAL, CHIP 6.8K 5% 1/10W
R451	1-216-057-00	s	METAL, CHIP 2.2K 5% 1/10W
R452	1-218-818-11	s	METAL, CHIP 220 5% 1/2W
R453	1-216-033-00	s	METAL, CHIP 220 5% 1/10W
R454	1-216-049-00	s	METAL, CHIP 1K 5% 1/10W
R455	1-216-097-00	s	METAL, CHIP 100K 5% 1/10W
R456	1-216-097-00	s	METAL, CHIP 100K 5% 1/10W
R457	1-216-073-00	s	METAL, CHIP 10K 5% 1/10W
R458	1-216-073-00	s	METAL, CHIP 10K 5% 1/10W
R459	⚠ 1-216-345-11	s	METAL 0.47 5% 1W
R460	1-216-073-00	s	METAL, CHIP 10K 5% 1/10W
R461	1-216-073-00	s	METAL, CHIP 10K 5% 1/10W
R462	1-216-025-00	s	METAL, CHIP 100 5% 1/10W
R463	1-216-049-00	s	METAL, CHIP 1K 5% 1/10W
R464	1-216-688-11	s	METAL, CHIP 36K 0.5% 1/10W
R465	1-216-097-00	s	METAL, CHIP 100K 5% 1/10W
R469	1-216-073-00	s	METAL, CHIP 10K 5% 1/10W
R470	1-216-073-00	s	METAL, CHIP 10K 5% 1/10W
R471	1-216-089-00	s	METAL, CHIP 47K 5% 1/10W
R472	1-216-089-00	s	METAL, CHIP 47K 5% 1/10W
R473	1-216-089-00	s	METAL, CHIP 47K 5% 1/10W
R474	1-216-682-11	s	METAL, CHIP 20K 0.5% 1/10W
R475	1-216-675-11	s	METAL, CHIP 10K 0.5% 1/10W
R476	1-216-065-00	s	METAL, CHIP 4.7K 5% 1/10W
R700	1-216-049-00	s	METAL, CHIP 1K 5% 1/10W
R701	1-216-033-00	s	METAL, CHIP 220 5% 1/10W
R702	1-216-073-00	s	METAL, CHIP 10K 5% 1/10W
R703	1-216-073-00	s	METAL, CHIP 10K 5% 1/10W
R704	1-216-049-00	s	METAL, CHIP 1K 5% 1/10W
R705	1-216-031-00	s	METAL, CHIP 180 5% 1/10W
R706	1-216-073-00	s	METAL, CHIP 10K 5% 1/10W
R707	1-216-089-00	s	METAL, CHIP 47K 5% 1/10W
R708	1-216-097-00	s	METAL, CHIP 100K 5% 1/10W

(DR-266 BOARD)

Ref. No. or Q'ty	Part No.	SP	Description
R709	1-216-073-00	s	METAL, CHIP 10K 5% 1/10W
R710	1-216-063-00	s	METAL, CHIP 3.9K 5% 1/10W
R711	1-216-089-00	s	METAL, CHIP 47K 5% 1/10W
R712	1-216-073-00	s	METAL, CHIP 10K 5% 1/10W
R714	1-216-091-00	s	METAL, CHIP 56K 5% 1/10W
R717	1-216-065-00	s	METAL, CHIP 4.7K 5% 1/10W
R732	1-216-091-00	s	METAL, CHIP 56K 5% 1/10W
R750	1-216-089-00	s	METAL, CHIP 47K 5% 1/10W
R756	1-216-049-00	s	METAL, CHIP 1K 5% 1/10W
R758	1-216-065-00	s	METAL, CHIP 4.7K 5% 1/10W
R759	1-216-065-00	s	METAL, CHIP 4.7K 5% 1/10W
R761	1-216-065-00	s	METAL, CHIP 4.7K 5% 1/10W
R764	1-216-089-00	s	METAL, CHIP 47K 5% 1/10W
R765	1-216-025-00	s	METAL, CHIP 100 5% 1/10W
R766	1-216-025-00	s	METAL, CHIP 100 5% 1/10W
RB762	1-233-236-11	s	RESISTOR BLOCK, CHIP 47Kx4
RB763	1-233-235-11	s	RESISTOR BLOCK, CHIP 10Kx4
RB767	1-233-235-11	s	RESISTOR BLOCK, CHIP 10Kx4
RB770	1-239-999-11	s	RESISTOR BLOCK, CHIP 1Kx4
RB772	1-233-236-11	s	RESISTOR BLOCK, CHIP 47Kx4
X701	1-577-358-21	s	RESONATOR, CERAMIC 4.00MHz

HN-198A BOARD

Ref. No. or Q'ty	Part No.	SP	Description
1pc	1-650-152-11	o	PRINTED CIRCUIT BOARD, HN-198
1pc	3-167-013-02	o	HOLDER, ST SENSOR
1pc	3-167-028-02	o	HOLDER, D
CN655	1-506-484-11	s	CONNECTOR 5P, MALE
CN656	1-564-013-11	o	CONNECTOR 3P, MALE
CN657	1-506-484-11	s	CONNECTOR 5P, MALE
CN658	1-506-487-11	s	CONNECTOR 8P, MALE
D1	8-719-985-00	s	LED GL451V, INFRA RED
Q1	8-729-926-31	s	PHOTO TRANSISTOR PT483F1
S1	1-570-953-11	s	SWITCH, PUSH

HP-64 BOARD

Ref. No. or Q'ty	Part No.	SP	Description
1pc	1-653-700-11	o	PRINTED CIRCUIT BOARD, HP-64
C1	1-164-232-11	s	CERAMIC, CHIP 0.01uF 10% 100V
CN103	1-506-484-11	s	CONNECTOR 5P, MALE
CN6001	1-507-863-51	s	JACK, PHONE
L1	1-543-775-11	s	FILTER, NOISE
R1	1-218-282-11	s	METAL, CHIP 22 5% 1/2W
R2	1-218-282-11	s	METAL, CHIP 22 5% 1/2W
RV1	1-237-703-11	s	RES, VAR CARBON 2K
S119	1-572-251-11	s	SWITCH, SLIDE

KY-303 BOARD(SVO-5800P)

Ref. No. or Q'ty	Part No.	SP	Description
KY-303 board is used for SVO-5800P(EK).			
1pc	A-8314-445-A	o	MOUNTED CIRCUIT BOARD, KY-303
1pc	3-682-296-02	o	HOLDER, LED
C101	1-126-941-11	s	ELECT 470uF 20% 25V
C102	1-163-011-11	s	CERAMIC 0.0015uF 10% 50V
C103	1-163-133-00	s	CERAMIC, CHIP 470PF 5% 50V
C104	1-126-157-11	s	ELECT 10uF 20% 16V
C105	1-163-011-11	s	CERAMIC 0.0015uF 10% 50V
C108	1-163-037-11	s	CERAMIC, CHIP 0.022uF 10% 25V
C109	1-124-589-11	s	ELECT 47uF 20% 16V
C110	1-124-589-11	s	ELECT 47uF 20% 16V
C111	1-163-133-00	s	CERAMIC, CHIP 470PF 5% 50V
C112	1-163-133-00	s	CERAMIC, CHIP 470PF 5% 50V
C113	1-163-133-00	s	CERAMIC, CHIP 470PF 5% 50V
C114	1-163-133-00	s	CERAMIC, CHIP 470PF 5% 50V
C115	1-124-589-11	s	ELECT 47uF 20% 16V
C116	1-126-096-11	s	ELECT 10uF 20% 35V
C117	1-126-157-11	s	ELECT 10uF 20% 16V
C118	1-126-157-11	s	ELECT 10uF 20% 16V
C201	1-126-157-11	s	ELECT 10uF 20% 16V
C202	1-126-157-11	s	ELECT 10uF 20% 16V
C203	1-126-157-11	s	ELECT 10uF 20% 16V
C204	1-126-157-11	s	ELECT 10uF 20% 16V
C207	1-124-589-11	s	ELECT 47uF 20% 16V
C208	1-124-589-11	s	ELECT 47uF 20% 16V
C209	1-126-157-11	s	ELECT 10uF 20% 16V
C210	1-126-157-11	s	ELECT 10uF 20% 16V
C211-216	1-163-037-11	s	CERAMIC, CHIP 0.022uF 10% 25V
CN101	1-564-013-11	o	CONNECTOR 3P, MALE
CN102	1-564-004-11	o	CONNECTOR 5P, MALE
CN806	1-562-991-11	o	CONNECTOR 22P, FEMALE
CN807	1-562-991-11	o	CONNECTOR 22P, FEMALE
D101	8-719-800-76	s	DIODE 1SS226
D102-119	8-719-801-78	s	DIODE 1S2837-T1
D120	8-719-050-60	s	LED TLO255A, ORG
D121	8-719-041-80	s	LED TLG255A, GRN
D122	8-719-820-36	s	LED TLS255A, RED
D123	8-719-041-80	s	LED TLG255A, GRN
D124	8-719-041-80	s	LED TLG255A, GRN
D125	8-719-820-36	s	LED TLS255A, RED
D126	8-719-041-80	s	LED TLG255A, GRN
D127	8-719-157-11	s	DIODE RD3.3M-T1B
D128	8-719-041-80	s	LED TLG255A, GRN
D129	8-719-050-60	s	LED TLO255A, ORG
D130	8-719-050-60	s	LED TLO255A, ORG
D131	8-719-041-80	s	LED TLG255A, GRN
D132	8-719-041-80	s	LED TLG255A, GRN
IC101	8-759-332-35	s	IC UPD78044GF-119-3B9
IC201	8-759-711-82	s	IC NJM4580E(T2)
IC202	8-759-711-82	s	IC NJM4580E(T2)
IC203	8-759-604-64	s	IC M5203FP-T2
IC204	8-759-711-58	s	IC NJM78L05UA
IC205	8-759-045-17	s	IC NJM79L05UA-TE1
JR1	1-216-295-91	s	RES, CHIP 0
JR2	1-216-295-91	s	RES, CHIP 0
JR3	1-216-295-91	s	RES, CHIP 0

(KY-303 BOARD(SVO-5800P))

Ref. No. or Q'ty	Part No.	SP	Description
L102	1-412-522-31	s	INDUCTOR 5.6uH
ND1	1-517-342-11	s	UNIT, FLD
Q101	8-729-230-49	s	TRANSISTOR 2SC2712-YG
Q102-106	8-729-904-57	s	TRANSISTOR DTB114EK-T-146
Q107	8-729-901-01	s	TRANSISTOR DTC144EK
Q108	8-729-901-01	s	TRANSISTOR DTC144EK
Q132	8-729-901-01	s	TRANSISTOR DTC144EK
Q201	8-729-901-01	s	TRANSISTOR DTC144EK
R101	1-220-221-11	s	METAL, CHIP 100 5% 1/2W
R102	1-216-089-00	s	METAL, CHIP 47K 5% 1/10W
R103	1-216-089-00	s	METAL, CHIP 47K 5% 1/10W
R104	1-216-057-00	s	METAL, CHIP 2.2K 5% 1/10W
R105	1-216-025-00	s	METAL, CHIP 100 5% 1/10W
R109	1-216-089-00	s	METAL, CHIP 47K 5% 1/10W
R110	1-216-089-00	s	METAL, CHIP 47K 5% 1/10W
R111	1-216-089-00	s	METAL, CHIP 47K 5% 1/10W
R112	1-216-049-00	s	METAL, CHIP 1K 5% 1/10W
R113	1-216-049-00	s	METAL, CHIP 1K 5% 1/10W
R114	1-216-057-00	s	METAL, CHIP 2.2K 5% 1/10W
R115	1-216-057-00	s	METAL, CHIP 2.2K 5% 1/10W
R116	1-216-049-00	s	METAL, CHIP 1K 5% 1/10W
R117	1-216-121-00	s	METAL, CHIP 1M 5% 1/10W
R118	1-216-121-00	s	METAL, CHIP 1M 5% 1/10W
R119	1-216-121-00	s	METAL, CHIP 1M 5% 1/10W
R120-127	1-216-049-00	s	METAL, CHIP 1K 5% 1/10W
R128	1-216-039-00	s	METAL, CHIP 390 5% 1/10W
R129	1-216-031-00	s	METAL, CHIP 180 5% 1/10W
R130	1-216-031-00	s	METAL, CHIP 180 5% 1/10W
R131	1-216-031-00	s	METAL, CHIP 180 5% 1/10W
R132	1-216-039-00	s	METAL, CHIP 390 5% 1/10W
R133	1-216-031-00	s	METAL, CHIP 180 5% 1/10W
R134	1-216-031-00	s	METAL, CHIP 180 5% 1/10W
R135	1-216-089-00	s	METAL, CHIP 47K 5% 1/10W
R136	1-216-089-00	s	METAL, CHIP 47K 5% 1/10W
R137	1-216-067-00	s	METAL, CHIP 5.6K 5% 1/10W
R138	1-216-049-00	s	METAL, CHIP 1K 5% 1/10W
R139	1-216-049-00	s	METAL, CHIP 1K 5% 1/10W
R201	1-216-081-00	s	METAL, CHIP 22K 5% 1/10W
R202	1-216-081-00	s	METAL, CHIP 22K 5% 1/10W
R203	1-216-081-00	s	METAL, CHIP 22K 5% 1/10W
RB101	1-233-237-11	s	RESISTOR BLOCK, CHIP 100Kx4
RB102	1-233-237-11	s	RESISTOR BLOCK, CHIP 100Kx4
RB103	1-233-237-11	s	RESISTOR BLOCK, CHIP 100Kx4
RB104	1-233-237-11	s	RESISTOR BLOCK, CHIP 100Kx4
RB105	1-233-237-11	s	RESISTOR BLOCK, CHIP 100Kx4
RB106	1-233-237-11	s	RESISTOR BLOCK, CHIP 100Kx4
RB107	1-239-998-11	s	RESISTOR BLOCK, CHIP 100x4
RB108	1-233-234-11	s	RESISTOR BLOCK, CHIP 2.2Kx4
RB109	1-233-234-11	s	RESISTOR BLOCK, CHIP 2.2Kx4
RV201	1-241-522-11	s	RES, VAR CARBON 10K
RV202	1-241-522-11	s	RES, VAR CARBON 10K
RV203	1-241-522-11	s	RES, VAR CARBON 10K
RV204	1-241-522-11	s	RES, VAR CARBON 10K
RV301	1-241-918-11	s	RES, VAR CARBON 5K
RV302	1-241-918-11	s	RES, VAR CARBON 5K
RV303	1-241-918-11	s	RES, VAR CARBON 5K

(KY-303 BOARD(SVO-5800P))

Ref. No. or Q'ty	Part No.	SP	Description
RV304	1-241-918-11	s	RES, VAR CARBON 5K
RV305	1-241-856-11	s	RES, VAR CARBON 5K
RV306	1-241-856-11	s	RES, VAR CARBON 5K
RV307	1-223-757-11	s	RES, VAR CARBON 100K
S101-108	1-571-977-11	s	SWITCH, PUSH
S109	1-552-539-00	s	SWITCH, TACTILE
S110	1-552-412-00	s	SWITCH, PUSH
S111	1-552-412-00	s	SWITCH, PUSH
S112	1-552-412-00	s	SWITCH, PUSH
S113	1-552-412-00	s	SWITCH, PUSH
S114	1-552-539-00	s	SWITCH, TACTILE
S115	1-552-412-00	s	SWITCH, PUSH
S116	1-571-977-11	s	SWITCH, PUSH
S117	1-571-640-21	s	SWITCH, SLIDE
S118	1-571-640-21	s	SWITCH, SLIDE
S120	1-572-992-11	s	SWITCH, SLIDE
S121	1-572-992-11	s	SWITCH, SLIDE
S122	1-572-992-11	s	SWITCH, SLIDE
S123	1-572-992-11	s	SWITCH, SLIDE
S301	1-553-925-00	s	SWITCH, DIGITAL
S302	1-571-640-21	s	SWITCH, SLIDE
S303	1-572-992-11	s	SWITCH, SLIDE
X101	1-577-358-21	s	RESONATOR, CERAMIC 4.00MHz

KY-303B BOARD(SVP-5600P)

Ref. No.
or Q'ty Part No. SP Description

KY-303B board is used for SVP-5600P(EK).

1pc	A-8314-431-A	o	MOUNTED CIRCUIT BOARD, KY-303B
1pc	3-682-296-02	o	HOLDER,LED
C101	1-126-941-11	s	ELECT 470uF 20% 25V
C102	1-163-011-11	s	CERAMIC 0.0015uF 10% 50V
C103	1-163-133-00	s	CERAMIC, CHIP 470PF 5% 50V
C104	1-126-157-11	s	ELECT 10uF 20% 16V
C105	1-163-011-11	s	CERAMIC 0.0015uF 10% 50V
C108	1-163-037-11	s	CERAMIC, CHIP 0.022uF 10% 25V
C109	1-124-589-11	s	ELECT 47uF 20% 16V
C110	1-124-589-11	s	ELECT 47uF 20% 16V
C111	1-163-133-00	s	CERAMIC, CHIP 470PF 5% 50V
C112	1-163-133-00	s	CERAMIC, CHIP 470PF 5% 50V
C113	1-163-133-00	s	CERAMIC, CHIP 470PF 5% 50V
C114	1-163-133-00	s	CERAMIC, CHIP 470PF 5% 50V
C115	1-124-589-11	s	ELECT 47uF 20% 16V
C116	1-126-096-11	s	ELECT 10uF 20% 35V
C117	1-126-157-11	s	ELECT 10uF 20% 16V
C118	1-126-157-11	s	ELECT 10uF 20% 16V
C207	1-124-589-11	s	ELECT 47uF 20% 16V
C208	1-124-589-11	s	ELECT 47uF 20% 16V
C209	1-126-157-11	s	ELECT 10uF 20% 16V
C210	1-126-157-11	s	ELECT 10uF 20% 16V
CN101	1-564-013-11	o	CONNECTOR 3P, MALE
CN102	1-564-004-11	o	CONNECTOR 5P, MALE
CN806	1-562-991-11	o	CONNECTOR 22P, FEMALE
CN807	1-562-991-11	o	CONNECTOR 22P, FEMALE
D101	8-719-800-76	s	DIODE 1SS226
D102-119	8-719-801-78	s	DIODE 1S2837-T1
D120	8-719-050-60	s	LED TLO255A, ORG
D121	8-719-041-80	s	LED TLG255A, GRN
D123	8-719-041-80	s	LED TLG255A, GRN
D124	8-719-041-80	s	LED TLG255A, GRN
D126	8-719-041-80	s	LED TLG255A, GRN
D127	8-719-157-11	s	DIODE RD3.3M-T1B
D128	8-719-041-80	s	LED TLG255A, GRN
D129	8-719-050-60	s	LED TLO255A, ORG
D130	8-719-050-60	s	LED TLO255A, ORG
D131	8-719-041-80	s	LED TLG255A, GRN
D132	8-719-041-80	s	LED TLG255A, GRN
IC101	8-759-332-35	s	IC UPD78044GF-119-3B9
IC204	8-759-711-58	s	IC NJM78L05UA
IC205	8-759-045-17	s	IC NJM79L05UA-TE1
JR1	1-216-295-91	s	RES, CHIP 0
JR2	1-216-295-91	s	RES, CHIP 0
JR3	1-216-295-91	s	RES, CHIP 0
L102	1-412-522-31	s	INDUCTOR 5.6uH
ND1	1-517-342-11	s	UNIT, FLD
Q101	8-729-230-49	s	TRANSISTOR 2SC2712-YG
Q102	8-729-904-57	s	TRANSISTOR DTB114EK-T-146
Q103	8-729-904-57	s	TRANSISTOR DTB114EK-T-146
Q105	8-729-904-57	s	TRANSISTOR DTB114EK-T-146
Q106	8-729-904-57	s	TRANSISTOR DTB114EK-T-146
Q107	8-729-901-01	s	TRANSISTOR DTC144EK
Q108	8-729-901-01	s	TRANSISTOR DTC144EK

(KY-303B BOARD(SVP-5600P))

Ref. No.
or Q'ty Part No. SP Description

Q132	8-729-901-01	s	TRANSISTOR DTC144EK
R101	1-220-221-11	s	METAL, CHIP 100 5% 1/2W
R102	1-216-089-00	s	METAL, CHIP 47K 5% 1/10W
R103	1-216-089-00	s	METAL, CHIP 47K 5% 1/10W
R104	1-216-057-00	s	METAL, CHIP 2.2K 5% 1/10W
R105	1-216-025-00	s	METAL, CHIP 100 5% 1/10W
R109	1-216-089-00	s	METAL, CHIP 47K 5% 1/10W
R110	1-216-089-00	s	METAL, CHIP 47K 5% 1/10W
R111	1-216-089-00	s	METAL, CHIP 47K 5% 1/10W
R112	1-216-049-00	s	METAL, CHIP 1K 5% 1/10W
R113	1-216-049-00	s	METAL, CHIP 1K 5% 1/10W
R114	1-216-057-00	s	METAL, CHIP 2.2K 5% 1/10W
R115	1-216-057-00	s	METAL, CHIP 2.2K 5% 1/10W
R116	1-216-049-00	s	METAL, CHIP 1K 5% 1/10W
R117	1-216-121-00	s	METAL, CHIP 1M 5% 1/10W
R118	1-216-121-00	s	METAL, CHIP 1M 5% 1/10W
R119	1-216-121-00	s	METAL, CHIP 1M 5% 1/10W
R120-127	1-216-049-00	s	METAL, CHIP 1K 5% 1/10W
R128	1-216-039-00	s	METAL, CHIP 390 5% 1/10W
R129	1-216-031-00	s	METAL, CHIP 180 5% 1/10W
R131	1-216-031-00	s	METAL, CHIP 180 5% 1/10W
R132	1-216-039-00	s	METAL, CHIP 390 5% 1/10W
R133	1-216-031-00	s	METAL, CHIP 180 5% 1/10W
R134	1-216-031-00	s	METAL, CHIP 180 5% 1/10W
R135	1-216-089-00	s	METAL, CHIP 47K 5% 1/10W
R136	1-216-089-00	s	METAL, CHIP 47K 5% 1/10W
R137	1-216-067-00	s	METAL, CHIP 5.6K 5% 1/10W
R138	1-216-049-00	s	METAL, CHIP 1K 5% 1/10W
R139	1-216-049-00	s	METAL, CHIP 1K 5% 1/10W
RB101	1-233-237-11	s	RESISTOR BLOCK, CHIP 100Kx4
RB102	1-233-237-11	s	RESISTOR BLOCK, CHIP 100Kx4
RB103	1-233-237-11	s	RESISTOR BLOCK, CHIP 100Kx4
RB104	1-233-237-11	s	RESISTOR BLOCK, CHIP 100Kx4
RB105	1-233-237-11	s	RESISTOR BLOCK, CHIP 100Kx4
RB106	1-233-237-11	s	RESISTOR BLOCK, CHIP 100Kx4
RB107	1-239-998-11	s	RESISTOR BLOCK, CHIP 100x4
RB108	1-233-234-11	s	RESISTOR BLOCK, CHIP 2.2Kx4
RB109	1-233-234-11	s	RESISTOR BLOCK, CHIP 2.2Kx4
RV301	1-241-918-11	s	RES, VAR CARBON 5K
RV302	1-241-918-11	s	RES, VAR CARBON 5K
RV303	1-241-918-11	s	RES, VAR CARBON 5K
RV304	1-241-918-11	s	RES, VAR CARBON 5K
RV305	1-241-856-11	s	RES, VAR CARBON 5K
RV306	1-241-856-11	s	RES, VAR CARBON 5K
RV307	1-223-757-11	s	RES, VAR CARBON 10OK
S101-108	1-571-977-11	s	SWITCH, PUSH
S109	1-552-539-00	s	SWITCH, TACTILE
S110	1-552-412-00	s	SWITCH, PUSH
S111	1-552-412-00	s	SWITCH, PUSH
S112	1-552-412-00	s	SWITCH, PUSH
S113	1-552-412-00	s	SWITCH, PUSH
S115	1-552-412-00	s	SWITCH, PUSH
S116	1-571-977-11	s	SWITCH, PUSH
S118	1-571-640-21	s	SWITCH, SLIDE
S120	1-572-992-11	s	SWITCH, SLIDE
S121	1-572-992-11	s	SWITCH, SLIDE
S122	1-572-992-11	s	SWITCH, SLIDE

(KY-303B BOARD(SVP-5600P))

Ref. No. or Q'ty	Part No.	SP	Description
S301	1-553-925-00	s	SWITCH, DIGITAL
S302	1-571-640-21	s	SWITCH, SLIDE
S303	1-572-992-11	s	SWITCH, SLIDE
X101	1-577-358-21	s	RESONATOR, CERAMIC 4.00MHz

LD-35 BOARD

Ref. No. or Q'ty	Part No.	SP	Description
CN620	1-506-481-11	s	CONNECTOR 2P, MALE

LE-131 BOARD

Ref. No. or Q'ty	Part No.	SP	Description
1pc	1-650-346-11	o	PRINTED CIRCUIT BOARD, LE-131
D1	8-719-821-22	s	LED TL0221, ORG

MB-535A BOARD

Ref. No. or Q'ty	Part No.	SP	Description
1pc	A-8310-375-A	o	MOUNTED CIRCUIT BOARD, MB-535A
1pc	⚠ 1-251-234-11	s	INLET, AC 3P, MALE
C1	1-126-952-11	s	ELECT 1000uF 20% 35V
C2	1-126-952-11	s	ELECT 1000uF 20% 35V
C3	1-163-809-11	s	CERAMIC, CHIP 0.047uF 10% 25V
C4	1-126-933-11	s	ELECT 100uF 20% 16V
C5	1-163-809-11	s	CERAMIC, CHIP 0.047uF 10% 25V
C6	1-126-933-11	s	ELECT 100uF 20% 16V
C7	1-124-126-00	s	ELECT 47uF 20% 25V
C8	1-124-126-00	s	ELECT 47uF 20% 25V
C9	1-110-598-91	s	ELECT 330uF 20% 16V
C10	1-126-104-11	s	ELECT 470uF 20% 35V
C11	1-126-142-11	s	ELECT 100uF 20% 35V
C101	1-124-589-11	s	ELECT 47uF 20% 16V
C102	1-163-037-11	s	CERAMIC, CHIP 0.022uF 10% 25V
C103	1-163-037-11	s	CERAMIC, CHIP 0.022uF 10% 25V
C104	1-163-037-11	s	CERAMIC, CHIP 0.022uF 10% 25V
C200	1-126-933-11	s	ELECT 100uF 20% 16V
C201	1-124-126-00	s	ELECT 47uF 20% 25V
C202	1-130-491-00	s	MYLAR 0.047uF 5% 50V
C203	1-130-491-00	s	MYLAR 0.047uF 5% 50V
C204	1-130-493-00	s	MYLAR 0.068uF 5% 50V
C205	1-164-232-11	s	CERAMIC, CHIP 0.01uF 10% 100V
C206	1-163-011-11	s	CERAMIC 0.0015uF 10% 50V
C207	1-163-037-11	s	CERAMIC, CHIP 0.022uF 10% 25V
C208	1-124-126-00	s	ELECT 47uF 20% 25V
C209	1-126-157-11	s	ELECT 10uF 20% 16V
C210	1-126-157-11	s	ELECT 10uF 20% 16V
C211	1-124-126-00	s	ELECT 47uF 20% 25V
C212	1-124-126-00	s	ELECT 47uF 20% 25V
C213	1-124-126-00	s	ELECT 47uF 20% 25V
C214	1-163-037-11	s	CERAMIC, CHIP 0.022uF 10% 25V
C215	1-126-157-11	s	ELECT 10uF 20% 16V
C216	1-124-126-00	s	ELECT 47uF 20% 25V
C217	1-124-126-00	s	ELECT 47uF 20% 25V
C1001	⚠ 1-137-106-11	s	FILM 0.022uF 20% 25V
CN101	1-766-792-11	o	CONNECTOR, BB 12P, FEMALE
CN104	1-506-470-11	s	CONNECTOR 5P, MALE
CN105	1-506-473-11	o	CONNECTOR 8P, MALE
CN106	1-564-007-11	o	CONNECTOR 8P, MALE
CN107	1-766-792-11	o	CONNECTOR, BB 12P, FEMALE
CN108	1-766-792-11	o	CONNECTOR, BB 12P, FEMALE
CN112	1-564-001-11	o	CONNECTOR 2P, MALE
CN113	1-506-480-11	s	CONNECTOR 15P, MALE
CN114	1-506-474-11	s	CONNECTOR 9P, MALE
CN115	1-506-474-11	s	CONNECTOR 9P, MALE
CN116	1-506-474-11	s	CONNECTOR 9P, MALE
CN123	1-506-467-11	s	CONNECTOR 2P, MALE
CN131	1-564-002-11	s	CONNECTOR 3P, MALE
CN201	1-766-794-11	o	CONNECTOR, DIN 64P, FEMALE
CN202	1-766-794-11	o	CONNECTOR, DIN 64P, FEMALE
CN301	1-766-794-11	o	CONNECTOR, DIN 64P, FEMALE
CN302	1-766-794-11	o	CONNECTOR, DIN 64P, FEMALE
CN303	1-766-794-11	o	CONNECTOR, DIN 64P, FEMALE
CN401	1-766-794-11	o	CONNECTOR, DIN 64P, FEMALE
CN402	1-766-794-11	o	CONNECTOR, DIN 64P, FEMALE
CN403	1-764-117-21	s	CONNECTOR, D-SUB 15P, MALE
CN404	1-764-119-21	s	CONNECTOR, D-SUB 9P, FEMALE

(MB-535A BOARD)

Ref. No. or Q'ty	Part No.	SP	Description
CN501	1-766-794-11	o	CONNECTOR, DIN 64P, FEMALE
CN502	1-766-794-11	o	CONNECTOR, DIN 64P, FEMALE
CN601	1-766-792-11	o	CONNECTOR, BB 12P, FEMALE
CN602	1-766-792-11	o	CONNECTOR, BB 12P, FEMALE
CN603	1-766-791-11	o	CONNECTOR, BB 10P, FEMALE
CN701	1-766-791-11	o	CONNECTOR, BB 10P, FEMALE
CN702	1-766-791-11	o	CONNECTOR, BB 10P, FEMALE
CN703	1-766-791-11	o	CONNECTOR, BB 10P, FEMALE
CN800	1-569-756-11	o	CONNECTOR, BB 18P, MALE
CN801	1-569-756-11	o	CONNECTOR, BB 18P, MALE
CN802	1-569-756-11	o	CONNECTOR, BB 18P, MALE
CN803	1-569-756-11	o	CONNECTOR, BB 18P, MALE
CN804	1-569-756-11	o	CONNECTOR, BB 18P, MALE
CN805	1-569-756-11	o	CONNECTOR, BB 18P, MALE
CN806	1-563-853-11	o	CONNECTOR, FPC 22P
CN807	1-563-853-11	o	CONNECTOR, FPC 22P
CN808	1-766-791-11	o	CONNECTOR, BB 10P, FEMALE
CN901	1-766-794-11	o	CONNECTOR, DIN 64P, FEMALE
CN1002	1-564-321-00	s	CONNECTOR, VH 2P, MALE
CN1003	1-564-516-11	o	CONNECTOR 13P, MALE
D1	8-719-022-14	s	DIODE RD13M-T1B
D2	8-719-022-76	s	DIODE RD30M-T1B
D201	8-719-200-02	s	DIODE 10E2
D202	8-719-200-02	s	DIODE 10E2
D203	8-719-157-20	s	DIODE RD4.3M-T1B
IC1	8-759-157-17	s	IC PQ05SZ1U
IC2	8-759-173-37	s	IC L79M09T-TL
IC3	8-759-172-41	s	IC L78M09T-TL
IC101	8-759-183-16	s	IC BR9021B
IC102	8-759-140-53	s	IC UPD4053BC
IC103	8-759-140-53	s	IC UPD4053BC
IC201	8-759-983-45	s	IC BA6238A
L101-134	1-412-390-21	s	INDUCTOR CHIP 0uH
L201	1-410-482-31	s	INDUCTOR 100uH
PS201	⚠ 1-532-685-00	s	LINK, IC 0.6A
PS202	⚠ 1-532-685-00	s	LINK, IC 0.6A
Q1	8-729-808-69	s	TRANSISTOR 2SB1204T-FA
Q2	8-729-808-69	s	TRANSISTOR 2SB1204T-FA
Q101	8-729-901-01	s	TRANSISTOR DTC144EK
Q201	8-729-889-40	s	TRANSISTOR 2SD894
Q202	8-729-811-11	s	TRANSISTOR 2SD1111
Q203	8-729-140-96	s	TRANSISTOR 2SD774-4
Q204	8-729-320-60	s	TRANSISTOR 2SD788-34
Q205	8-729-216-22	s	TRANSISTOR 2SA1162
Q206	8-729-230-49	s	TRANSISTOR 2SC2712-YG
Q207	8-729-901-01	s	TRANSISTOR DTC144EK
R1	1-218-369-11	s	METAL, CHIP 2.2K 5% 1/2W
R2	1-218-369-11	s	METAL, CHIP 2.2K 5% 1/2W
R3	1-220-269-11	s	METAL, CHIP 330 5% 1/2W
R4	1-220-269-11	s	METAL, CHIP 330 5% 1/2W
R101	1-216-089-00	s	METAL, CHIP 47K 5% 1/10W
R102-107	1-220-264-11	s	METAL, CHIP 1K 5% 1/4W
R108	1-216-073-00	s	METAL, CHIP 10K 5% 1/10W
R200	1-216-073-00	s	METAL, CHIP 10K 5% 1/10W
R201	1-216-089-00	s	METAL, CHIP 47K 5% 1/10W
R202	1-216-089-00	s	METAL, CHIP 47K 5% 1/10W
R203	1-216-041-00	s	METAL, CHIP 470 5% 1/10W

(MB-535A BOARD)

Ref. No. or Q'ty	Part No.	SP	Description
R205	1-216-073-00	s	METAL, CHIP 10K 5% 1/10W
R206	1-220-232-11	s	METAL, CHIP 3.3 10% 1/4W
R207	1-216-071-00	s	METAL, CHIP 8.2K 5% 1/10W
R208	1-216-073-00	s	METAL, CHIP 10K 5% 1/10W
R209	1-216-053-00	s	METAL, CHIP 1.5K 5% 1/10W
R210	1-216-073-00	s	METAL, CHIP 10K 5% 1/10W
R211	1-216-073-00	s	METAL, CHIP 10K 5% 1/10W
R212	1-216-065-00	s	METAL, CHIP 4.7K 5% 1/10W
R213	1-216-073-00	s	METAL, CHIP 10K 5% 1/10W
R1001	⚠ 1-214-937-00	s	METAL 1M 1% 1/2W
RB201	1-233-236-11	s	RESISTOR BLOCK, CHIP 47Kx4
T201	1-406-349-11	s	TRANSFORMER, OSCILLATION

PTC-73A BOARD

Ref. No. or Q'ty	Part No.	SP	Description
1pc	A-8314-425-A	o	MOUNTED CIRCUIT BOARD, PTC-73A
CN611	1-506-487-11	s	CONNECTOR 8P, MALE
CN633	1-564-013-11	o	CONNECTOR 3P, MALE
PH1	8-719-939-11	s	PHOTOINTERRUPTER GP-2S09-B
PH2	8-719-939-11	s	PHOTOINTERRUPTER GP-2S09-B
PH3	8-719-939-11	s	PHOTOINTERRUPTER GP-2S09-B

RM-145 BOARD

Ref. No. or Q'ty	Part No.	SP	Description
1pc	1-653-702-11	o	PRINTED CIRCUIT BOARD, RM-145
CN101	1-569-333-11	s	CONNECTOR, BB 3P, MALE
CN1002	1-507-743-21	s	JACK, MINI STEREO

RP-74A BOARD(SVO-5800P)

Ref. No.
or Q'ty Part No. SP Description

RP-74A board is used for SVO-5800P(EK).

1pc	A-8265-867-A	o	MOUNTED CIRCUIT BOARD, RP-74A
1pc	3-681-794-01	o	CASE, SHIELD(B), RP
C101	1-163-249-11	s	CERAMIC, CHIP 82pF 5% 50V
C102	1-163-227-11	s	CERAMIC, CHIP 10PF 5% 50V
C103	1-163-145-00	s	CERAMIC, CHIP 0.0015uF 5% 50V
C104	1-164-004-11	s	CERAMIC, CHIP 0.1uF 10% 25V
C105	1-164-004-11	s	CERAMIC, CHIP 0.1uF 10% 25V
C106	1-163-227-11	s	CERAMIC, CHIP 10PF 5% 50V
C107	1-163-116-00	s	CERAMIC, CHIP 91PF 5% 50V
C108	1-163-145-00	s	CERAMIC, CHIP 0.0015uF 5% 50V
C109	1-163-249-11	s	CERAMIC, CHIP 82pF 5% 50V
C110	1-163-145-00	s	CERAMIC, CHIP 0.0015uF 5% 50V
C111	1-163-235-11	s	CERAMIC, CHIP 22PF 5% 50V
C112	1-164-004-11	s	CERAMIC, CHIP 0.1uF 10% 25V
C113	1-164-004-11	s	CERAMIC, CHIP 0.1uF 10% 25V
C114	1-163-235-11	s	CERAMIC, CHIP 22PF 5% 50V
C115	1-163-145-00	s	CERAMIC, CHIP 0.0015uF 5% 50V
C116	1-163-251-11	s	CERAMIC, CHIP 100PF 5% 50V
C117	1-124-589-11	s	ELECT 47uF 20% 16V
C118	1-164-004-11	s	CERAMIC, CHIP 0.1uF 10% 25V
C120	1-164-695-11	s	CERAMIC 0.0022uF 5% 50V
C121	1-163-227-11	s	CERAMIC, CHIP 10PF 5% 50V
C122	1-163-229-11	s	CERAMIC, CHIP 12PF 5% 50V
C123	1-124-252-00	s	ELECT 0.33uF 20% 50V
C124	1-164-232-11	s	CERAMIC, CHIP 0.01uF 10% 100V
C125	1-163-253-11	s	CERAMIC, CHIP 120PF 5% 50V
C126	1-164-232-11	s	CERAMIC, CHIP 0.01uF 10% 100V
C127	1-163-113-00	s	CERAMIC, CHIP 68PF 5% 50V
C128	1-163-121-00	s	CERAMIC, CHIP 150PF 5% 50V
C129	1-163-135-00	s	CERAMIC, CHIP 560PF 5% 50V
C130	1-163-113-00	s	CERAMIC, CHIP 68PF 5% 50V
C131	1-124-589-11	s	ELECT 47uF 20% 16V
C132	1-163-251-11	s	CERAMIC, CHIP 100PF 5% 50V
C133	1-164-232-11	s	CERAMIC, CHIP 0.01uF 10% 100V
C134	1-163-097-00	s	CERAMIC, CHIP 15PF 5% 50V
C135	1-163-235-11	s	CERAMIC, CHIP 22PF 5% 50V
C136	1-164-232-11	s	CERAMIC, CHIP 0.01uF 10% 100V
C137	1-164-232-11	s	CERAMIC, CHIP 0.01uF 10% 100V
C138	1-164-232-11	s	CERAMIC, CHIP 0.01uF 10% 100V
C139	1-163-237-11	s	CERAMIC, CHIP 27PF 5% 50V
C140	1-163-229-11	s	CERAMIC, CHIP 12PF 5% 50V
C141	1-164-232-11	s	CERAMIC, CHIP 0.01uF 10% 100V
C142	1-163-251-11	s	CERAMIC, CHIP 100PF 5% 50V
C143	1-163-809-11	s	CERAMIC, CHIP 0.047uF 10% 25V
C144	1-163-241-11	s	CERAMIC, CHIP 39PF 5% 50V
C145	1-124-584-00	s	ELECT 100uF 20% 10V
C146	1-164-232-11	s	CERAMIC, CHIP 0.01uF 10% 100V
C147	1-163-237-11	s	CERAMIC, CHIP 27PF 5% 50V
C148	1-163-809-11	s	CERAMIC, CHIP 0.047uF 10% 25V
C149	1-164-004-11	s	CERAMIC, CHIP 0.1uF 10% 25V
C150	1-124-584-00	s	ELECT 100uF 20% 10V
C151	1-164-346-11	s	CERAMIC 1uF 16V
C152	1-163-113-00	s	CERAMIC, CHIP 68PF 5% 50V
C153	1-163-253-11	s	CERAMIC, CHIP 120PF 5% 50V
C154	1-163-113-00	s	CERAMIC, CHIP 68PF 5% 50V
C155	1-164-232-11	s	CERAMIC, CHIP 0.01uF 10% 100V
C200	1-164-232-11	s	CERAMIC, CHIP 0.01uF 10% 100V

(RP-74A BOARD(SVO-5800P))

Ref. No.
or Q'ty Part No. SP Description

C201	1-164-232-11	s	CERAMIC, CHIP 0.01uF 10% 100V
C202	1-124-584-00	s	ELECT 100uF 20% 10V
C203	1-164-232-11	s	CERAMIC, CHIP 0.01uF 10% 100V
C204	1-163-121-00	s	CERAMIC, CHIP 150PF 5% 50V
C205	1-163-125-00	s	CERAMIC, CHIP 220PF 5% 50V
C206	1-163-251-11	s	CERAMIC, CHIP 100PF 5% 50V
C207	1-164-232-11	s	CERAMIC, CHIP 0.01uF 10% 100V
C208	1-164-232-11	s	CERAMIC, CHIP 0.01uF 10% 100V
C209	1-163-809-11	s	CERAMIC, CHIP 0.047uF 10% 25V
C210	1-124-584-00	s	ELECT 100uF 20% 10V
C211	1-163-241-11	s	CERAMIC, CHIP 39PF 5% 50V
C213	1-124-584-00	s	ELECT 100uF 20% 10V
C214	1-163-809-11	s	CERAMIC, CHIP 0.047uF 10% 25V
C217	1-164-232-11	s	CERAMIC, CHIP 0.01uF 10% 100V
C218	1-164-232-11	s	CERAMIC, CHIP 0.01uF 10% 100V
C219	1-126-163-11	s	ELECT 4.7uF 20% 50V
C220	1-163-809-11	s	CERAMIC, CHIP 0.047uF 10% 25V
C221	1-163-809-11	s	CERAMIC, CHIP 0.047uF 10% 25V
C252	1-164-232-11	s	CERAMIC, CHIP 0.01uF 10% 100V
C253	1-163-809-11	s	CERAMIC, CHIP 0.047uF 10% 25V
C254	1-163-809-11	s	CERAMIC, CHIP 0.047uF 10% 25V
C255	1-163-809-11	s	CERAMIC, CHIP 0.047uF 10% 25V
C256	1-163-809-11	s	CERAMIC, CHIP 0.047uF 10% 25V
C257	1-124-584-00	s	ELECT 100uF 20% 10V
C258	1-163-809-11	s	CERAMIC, CHIP 0.047uF 10% 25V
C259	1-164-232-11	s	CERAMIC, CHIP 0.01uF 10% 100V
C260	1-163-235-11	s	CERAMIC, CHIP 22PF 5% 50V
C261	1-164-232-11	s	CERAMIC, CHIP 0.01uF 10% 100V
C262	1-163-235-11	s	CERAMIC, CHIP 22PF 5% 50V
C263	1-164-232-11	s	CERAMIC, CHIP 0.01uF 10% 100V
C300	1-164-232-11	s	CERAMIC, CHIP 0.01uF 10% 100V
C301	1-164-004-11	s	CERAMIC, CHIP 0.1uF 10% 25V
C302	1-164-004-11	s	CERAMIC, CHIP 0.1uF 10% 25V
C303	1-164-232-11	s	CERAMIC, CHIP 0.01uF 10% 100V
C304	1-164-232-11	s	CERAMIC, CHIP 0.01uF 10% 100V
C305	1-164-004-11	s	CERAMIC, CHIP 0.1uF 10% 25V
C306	1-124-584-00	s	ELECT 100uF 20% 10V
C307	1-164-232-11	s	CERAMIC, CHIP 0.01uF 10% 100V
C308	1-124-463-00	s	ELECT 0.1uF 20% 50V
C309	1-126-160-11	s	ELECT 1uF 20% 50V
C310	1-164-232-11	s	CERAMIC, CHIP 0.01uF 10% 100V
C311	1-164-232-11	s	CERAMIC, CHIP 0.01uF 10% 100V
C312	1-164-232-11	s	CERAMIC, CHIP 0.01uF 10% 100V
C313	1-163-251-11	s	CERAMIC, CHIP 100PF 5% 50V
C314	1-164-004-11	s	CERAMIC, CHIP 0.1uF 10% 25V
C450	1-164-232-11	s	CERAMIC, CHIP 0.01uF 10% 100V
CN101	1-766-790-11	o	CONNECTOR, BB 12P, MALE
CN102	1-563-590-11	s	CONNECTOR, FPC 13P
CN103	1-564-031-00	o	CONNECTOR 6P, MALE
CN107	1-766-790-11	o	CONNECTOR, BB 12P, MALE
CN108	1-766-790-11	o	CONNECTOR, BB 12P, MALE
D100	8-719-801-78	s	DIODE 1S2837-T1
D102	8-719-801-78	s	DIODE 1S2837-T1
D103	8-719-801-78	s	DIODE 1S2837-T1
D105	8-719-801-78	s	DIODE 1S2837-T1
D106	8-719-801-78	s	DIODE 1S2837-T1
D108	8-719-801-78	s	DIODE 1S2837-T1
D300	8-719-104-34	s	DIODE 1S2835

(RP-74A BOARD(SVO-5800P))

Ref. No. or Q'ty	Part No.	SP	Description
DL251	1-415-858-11	s	DELAY LINE 35ns
DL252	1-415-858-11	s	DELAY LINE 35ns
DL253	1-415-858-11	s	DELAY LINE 35ns
IC100	8-759-046-75	s	IC HA118162NT
IC200	8-759-998-32	s	IC CXD2107M-ELL20
IC251	8-759-012-00	s	IC MC10H116M
IC252	8-759-012-00	s	IC MC10H116M
IC253	8-759-012-01	s	IC MC10H117M
IC300	8-759-055-49	s	IC AN3327K
L100	1-408-425-00	s	INDUCTOR 220uH
L101	1-410-482-31	s	INDUCTOR 100uH
L102	1-410-471-11	s	INDUCTOR 12uH
L103	1-410-470-11	s	INDUCTOR 10uH
L104	1-410-471-11	s	INDUCTOR 12uH
L105	1-410-482-31	s	INDUCTOR 100uH
L106	1-410-470-11	s	INDUCTOR 10uH
L107	1-410-478-11	s	INDUCTOR 47uH
L108	1-410-482-31	s	INDUCTOR 100uH
L109	1-408-413-00	s	INDUCTOR 22uH
L110	1-408-416-00	s	INDUCTOR 39uH
L111	1-410-473-11	s	INDUCTOR 18uH
L112	1-410-482-31	s	INDUCTOR 100uH
L113	1-410-482-31	s	INDUCTOR 100uH
L200	1-408-429-00	s	INDUCTOR 470uH
L201	1-410-140-11	s	INDUCTOR 6.8uH
L202	1-410-482-31	s	INDUCTOR 100uH
L203	1-410-482-31	s	INDUCTOR 100uH
L251	1-410-482-31	s	INDUCTOR 100uH
L300	1-410-482-31	s	INDUCTOR 100uH
Q102	8-729-904-07	s	TRANSISTOR FMG2
Q103	8-729-230-49	s	TRANSISTOR 2SC2712-YG
Q104	8-729-907-26	s	TRANSISTOR IMX1
Q105	8-729-907-46	s	TRANSISTOR IMZ1
Q106	8-729-907-26	s	TRANSISTOR IMX1
Q107	8-729-202-38	s	TRANSISTOR 2SC3326N
Q108	8-729-216-22	s	TRANSISTOR 2SA1162
Q109	8-729-202-38	s	TRANSISTOR 2SC3326N
Q110	8-729-230-49	s	TRANSISTOR 2SC2712-YG
Q111	8-729-216-22	s	TRANSISTOR 2SA1162
Q112	8-729-230-49	s	TRANSISTOR 2SC2712-YG
Q114	8-729-301-98	s	TRANSISTOR 2SB1000AKTL
Q115	8-729-202-38	s	TRANSISTOR 2SC3326N
Q116	8-729-216-22	s	TRANSISTOR 2SA1162
Q117	8-729-904-07	s	TRANSISTOR FMG2
Q200	8-729-216-22	s	TRANSISTOR 2SA1162
Q201	8-729-901-01	s	TRANSISTOR DTC144EK
Q202	8-729-216-22	s	TRANSISTOR 2SA1162
Q203	8-729-216-22	s	TRANSISTOR 2SA1162
Q204	8-729-901-06	s	TRANSISTOR DTA144EK
Q205	8-729-230-49	s	TRANSISTOR 2SC2712-YG
Q206	8-729-904-07	s	TRANSISTOR FMG2
Q251	8-729-230-49	s	TRANSISTOR 2SC2712-YG
Q252	8-729-230-49	s	TRANSISTOR 2SC2712-YG
Q253	8-729-216-22	s	TRANSISTOR 2SA1162
Q254	8-729-904-07	s	TRANSISTOR FMG2
Q300	8-729-301-98	s	TRANSISTOR 2SB1000AKTL
Q301	8-729-901-01	s	TRANSISTOR DTC144EK

(RP-74A BOARD(SVO-5800P))

Ref. No. or Q'ty	Part No.	SP	Description
Q302	8-729-901-01	s	TRANSISTOR DTC144EK
R100	1-216-043-91	s	METAL, CHIP 560 5% 1/10W
R101	1-216-626-11	s	METAL, CHIP 91 0.5% 1/10W
R104	1-216-613-11	s	METAL, CHIP 27 0.5% 1/10W
R105	1-216-626-11	s	METAL, CHIP 91 0.5% 1/10W
R106	1-216-626-11	s	METAL, CHIP 91 0.5% 1/10W
R107	1-216-613-11	s	METAL, CHIP 27 0.5% 1/10W
R110	1-216-627-11	s	METAL, CHIP 100 0.5% 1/10W
R111	1-216-049-00	s	METAL, CHIP 1K 5% 1/10W
R113	1-216-013-00	s	METAL, CHIP 33 5% 1/10W
R114	1-216-057-00	s	METAL, CHIP 2.2K 5% 1/10W
R115	1-216-081-00	s	METAL, CHIP 22K 5% 1/10W
R116	1-208-774-11	s	METAL, CHIP 470 0.50% 1/10W
R117	1-216-645-11	s	METAL, CHIP 560 0.5% 1/10W
R118	1-216-059-00	s	METAL, CHIP 2.7K 5% 1/10W
R119	1-216-025-00	s	METAL, CHIP 100 5% 1/10W
R120	1-208-784-11	s	METAL, CHIP 1.2K 0.50% 1/10W
R121	1-216-067-00	s	METAL, CHIP 5.6K 5% 1/10W
R122	1-216-051-00	s	METAL, CHIP 1.2K 5% 1/10W
R123	1-216-647-11	s	METAL, CHIP 680 0.5% 1/10W
R124	1-216-063-00	s	METAL, CHIP 3.9K 5% 1/10W
R125	1-208-774-11	s	METAL, CHIP 470 0.50% 1/10W
R126	1-216-047-00	s	METAL, CHIP 820 5% 1/10W
R127	1-216-057-00	s	METAL, CHIP 2.2K 5% 1/10W
R128	1-216-645-11	s	METAL, CHIP 560 0.5% 1/10W
R129	1-216-081-00	s	METAL, CHIP 22K 5% 1/10W
R130	1-208-774-11	s	METAL, CHIP 470 0.50% 1/10W
R131	1-216-049-00	s	METAL, CHIP 1K 5% 1/10W
R132	1-216-651-11	s	METAL, CHIP 1K 0.5% 1/10W
R133	1-216-635-11	s	METAL, CHIP 220 0.5% 1/10W
R134	1-216-081-00	s	METAL, CHIP 22K 5% 1/10W
R135	1-216-035-00	s	METAL, CHIP 270 5% 1/10W
R136	1-216-025-00	s	METAL, CHIP 100 5% 1/10W
R137	1-216-659-11	s	METAL, CHIP 2.2K 0.5% 1/10W
R138	1-216-073-00	s	METAL, CHIP 10K 5% 1/10W
R139	1-216-645-11	s	METAL, CHIP 560 0.5% 1/10W
R140	1-216-081-00	s	METAL, CHIP 22K 5% 1/10W
R141	1-216-651-11	s	METAL, CHIP 1K 0.5% 1/10W
R142	1-216-647-11	s	METAL, CHIP 680 0.5% 1/10W
R143	1-216-081-00	s	METAL, CHIP 22K 5% 1/10W
R144	1-208-784-11	s	METAL, CHIP 1.2K 0.50% 1/10W
R145	1-216-073-00	s	METAL, CHIP 10K 5% 1/10W
R147	1-216-641-11	s	METAL, CHIP 390 0.5% 1/10W
R148	1-216-067-00	s	METAL, CHIP 5.6K 5% 1/10W
R149	1-216-649-11	s	METAL, CHIP 820 0.5% 1/10W
R150	1-216-077-00	s	METAL, CHIP 15K 5% 1/10W
R151	1-216-651-11	s	METAL, CHIP 1K 0.5% 1/10W
R152	1-216-077-00	s	METAL, CHIP 15K 5% 1/10W
R153	1-216-649-11	s	METAL, CHIP 820 0.5% 1/10W
R154	1-216-645-11	s	METAL, CHIP 560 0.5% 1/10W
R155	1-216-077-00	s	METAL, CHIP 15K 5% 1/10W
R156	1-216-045-00	s	METAL, CHIP 680 5% 1/10W
R157	1-216-081-00	s	METAL, CHIP 22K 5% 1/10W
R158	1-216-649-11	s	METAL, CHIP 820 0.5% 1/10W
R160	1-216-065-00	s	METAL, CHIP 4.7K 5% 1/10W
R161	1-216-671-11	s	METAL, CHIP 6.8K 0.5% 1/10W
R162	1-216-675-11	s	METAL, CHIP 10K 0.5% 1/10W
R165	1-216-649-11	s	METAL, CHIP 820 0.5% 1/10W

(RP-74A BOARD(SVO-5800P))

Ref. No. or Q'ty	Part No.	SP	Description
R167	1-216-089-00	s	METAL, CHIP 47K 5% 1/10W
R200	1-216-025-00	s	METAL, CHIP 100 5% 1/10W
R201	1-216-079-00	s	METAL, CHIP 18K 5% 1/10W
R202	1-216-049-00	s	METAL, CHIP 1K 5% 1/10W
R203	1-216-089-00	s	METAL, CHIP 47K 5% 1/10W
R204	1-216-689-11	s	METAL, CHIP 39K 0.5% 1/10W
R205	1-216-045-00	s	METAL, CHIP 680 5% 1/10W
R206	1-216-093-00	s	METAL, CHIP 68K 5% 1/10W
R207	1-216-089-00	s	METAL, CHIP 47K 5% 1/10W
R208	1-216-053-00	s	METAL, CHIP 1.5K 5% 1/10W
R209	1-216-049-00	s	METAL, CHIP 1K 5% 1/10W
R210	1-216-047-00	s	METAL, CHIP 820 5% 1/10W
R211	1-216-683-11	s	METAL, CHIP 22K 0.5% 1/10W
R212	1-216-295-91	s	RES, CHIP 0
R213	1-216-065-00	s	METAL, CHIP 4.7K 5% 1/10W
R214	1-216-073-00	s	METAL, CHIP 10K 5% 1/10W
R215	1-216-041-00	s	METAL, CHIP 470 5% 1/10W
R217	1-216-085-00	s	METAL, CHIP 33K 5% 1/10W
R218	1-216-659-11	s	METAL, CHIP 2.2K 0.5% 1/10W
R250	1-216-647-11	s	METAL, CHIP 680 0.5% 1/10W
R251	1-216-651-11	s	METAL, CHIP 1K 0.5% 1/10W
R252	1-216-049-00	s	METAL, CHIP 1K 5% 1/10W
R253	1-208-767-11	s	METAL, CHIP 240 0.5% 1/10W
R254	1-208-774-11	s	METAL, CHIP 470 0.50% 1/10W
R255	1-216-049-00	s	METAL, CHIP 1K 5% 1/10W
R256	1-216-649-11	s	METAL, CHIP 820 0.5% 1/10W
R257	1-216-041-00	s	METAL, CHIP 470 5% 1/10W
R258	1-208-767-11	s	METAL, CHIP 240 0.5% 1/10W
R259	1-208-774-11	s	METAL, CHIP 470 0.50% 1/10W
R260	1-216-049-00	s	METAL, CHIP 1K 5% 1/10W
R261	1-208-784-11	s	METAL, CHIP 1.2K 0.50% 1/10W
R262	1-216-041-00	s	METAL, CHIP 470 5% 1/10W
R263	1-216-049-00	s	METAL, CHIP 1K 5% 1/10W
R264	1-216-635-11	s	METAL, CHIP 220 0.5% 1/10W
R265	1-216-049-00	s	METAL, CHIP 1K 5% 1/10W
R266	1-216-041-00	s	METAL, CHIP 470 5% 1/10W
R267	1-216-651-11	s	METAL, CHIP 1K 0.5% 1/10W
R268	1-216-651-11	s	METAL, CHIP 1K 0.5% 1/10W
R269	1-208-774-11	s	METAL, CHIP 470 0.50% 1/10W
R270	1-216-049-00	s	METAL, CHIP 1K 5% 1/10W
R271	1-216-639-11	s	METAL, CHIP 330 0.5% 1/10W
R272	1-216-049-00	s	METAL, CHIP 1K 5% 1/10W
R273	1-216-049-00	s	METAL, CHIP 1K 5% 1/10W
R274	1-216-049-00	s	METAL, CHIP 1K 5% 1/10W
R275	1-216-049-00	s	METAL, CHIP 1K 5% 1/10W
R276	1-216-035-00	s	METAL, CHIP 270 5% 1/10W
R277	1-216-041-00	s	METAL, CHIP 470 5% 1/10W
R278	1-216-065-00	s	METAL, CHIP 4.7K 5% 1/10W
R279	1-216-065-00	s	METAL, CHIP 4.7K 5% 1/10W
R281	1-216-049-00	s	METAL, CHIP 1K 5% 1/10W
R283	1-216-687-11	s	METAL, CHIP 33K 0.5% 1/10W
R284	1-216-683-11	s	METAL, CHIP 22K 0.5% 1/10W
R285	1-216-689-11	s	METAL, CHIP 39K 0.5% 1/10W
R300	1-216-057-00	s	METAL, CHIP 2.2K 5% 1/10W
R301	1-216-057-00	s	METAL, CHIP 2.2K 5% 1/10W
R302	1-216-035-00	s	METAL, CHIP 270 5% 1/10W
R303	1-216-033-00	s	METAL, CHIP 220 5% 1/10W
R304	1-216-035-00	s	METAL, CHIP 270 5% 1/10W
R305	1-208-812-11	s	METAL, CHIP 18K 0.5% 1/10W

(RP-74A BOARD(SVO-5800P))

Ref. No. or Q'ty	Part No.	SP	Description
R306	1-216-067-00	s	METAL, CHIP 5.6K 5% 1/10W
R307	1-216-051-00	s	METAL, CHIP 1.2K 5% 1/10W
R308	1-216-089-00	s	METAL, CHIP 47K 5% 1/10W
RB101	1-239-389-11	s	RESISTOR BLOCK, CHIP 47Kx4

RP-74C BOARD(SVP-5600P)

Ref. No. or Q'ty	Part No.	SP	Description
RP-74C board is used for SVP-5600P(EK).			
1pc	A-8265-880-A	o	MOUNTED CIRCUIT BOARD, RP-74C
1pc	3-681-794-01	o	CASE, SHIELD(B), RP
C101	1-163-249-11	s	CERAMIC, CHIP 82pF 5% 50V
C102	1-163-227-11	s	CERAMIC, CHIP 10PF 5% 50V
C103	1-163-145-00	s	CERAMIC, CHIP 0.0015uF 5% 50V
C104	1-164-004-11	s	CERAMIC, CHIP 0.1uF 10% 25V
C105	1-164-004-11	s	CERAMIC, CHIP 0.1uF 10% 25V
C106	1-163-227-11	s	CERAMIC, CHIP 10PF 5% 50V
C107	1-163-116-00	s	CERAMIC, CHIP 91PF 5% 50V
C108	1-163-145-00	s	CERAMIC, CHIP 0.0015uF 5% 50V
C109	1-163-249-11	s	CERAMIC, CHIP 82pF 5% 50V
C110	1-163-145-00	s	CERAMIC, CHIP 0.0015uF 5% 50V
C111	1-163-235-11	s	CERAMIC, CHIP 22PF 5% 50V
C112	1-164-004-11	s	CERAMIC, CHIP 0.1uF 10% 25V
C113	1-164-004-11	s	CERAMIC, CHIP 0.1uF 10% 25V
C114	1-163-235-11	s	CERAMIC, CHIP 22PF 5% 50V
C115	1-163-145-00	s	CERAMIC, CHIP 0.0015uF 5% 50V
C116	1-163-251-11	s	CERAMIC, CHIP 100PF 5% 50V
C120	1-164-695-11	s	CERAMIC 0.0022uF 5% 50V
C121	1-163-227-11	s	CERAMIC, CHIP 10PF 5% 50V
C122	1-163-229-11	s	CERAMIC, CHIP 12PF 5% 50V
C123	1-124-252-00	s	ELECT 0.33uF 20% 50V
C124	1-164-232-11	s	CERAMIC, CHIP 0.01uF 10% 100V
C125	1-163-253-11	s	CERAMIC, CHIP 120PF 5% 50V
C126	1-164-232-11	s	CERAMIC, CHIP 0.01uF 10% 100V
C127	1-163-113-00	s	CERAMIC, CHIP 68PF 5% 50V
C128	1-163-121-00	s	CERAMIC, CHIP 150PF 5% 50V
C129	1-163-135-00	s	CERAMIC, CHIP 560PF 5% 50V
C130	1-163-113-00	s	CERAMIC, CHIP 68PF 5% 50V
C132	1-163-251-11	s	CERAMIC, CHIP 100PF 5% 50V
C133	1-164-232-11	s	CERAMIC, CHIP 0.01uF 10% 100V
C134	1-163-097-00	s	CERAMIC, CHIP 15PF 5% 50V
C135	1-163-235-11	s	CERAMIC, CHIP 22PF 5% 50V
C136	1-164-232-11	s	CERAMIC, CHIP 0.01uF 10% 100V
C137	1-164-232-11	s	CERAMIC, CHIP 0.01uF 10% 100V
C138	1-164-232-11	s	CERAMIC, CHIP 0.01uF 10% 100V
C139	1-163-237-11	s	CERAMIC, CHIP 27PF 5% 50V
C140	1-163-229-11	s	CERAMIC, CHIP 12PF 5% 50V
C141	1-164-232-11	s	CERAMIC, CHIP 0.01uF 10% 100V
C142	1-163-251-11	s	CERAMIC, CHIP 100PF 5% 50V
C144	1-163-241-11	s	CERAMIC, CHIP 39PF 5% 50V
C145	1-124-584-00	s	ELECT 100uF 20% 10V
C146	1-164-232-11	s	CERAMIC, CHIP 0.01uF 10% 100V
C147	1-163-237-11	s	CERAMIC, CHIP 27PF 5% 50V
C148	1-163-809-11	s	CERAMIC, CHIP 0.047uF 10% 25V
C149	1-164-004-11	s	CERAMIC, CHIP 0.1uF 10% 25V
C150	1-124-584-00	s	ELECT 100uF 20% 10V
C151	1-164-346-11	s	CERAMIC 1uF 16V
C208	1-164-232-11	s	CERAMIC, CHIP 0.01uF 10% 100V
C209	1-163-809-11	s	CERAMIC, CHIP 0.047uF 10% 25V
C210	1-124-584-00	s	ELECT 100uF 20% 10V
C213	1-124-584-00	s	ELECT 100uF 20% 10V
C214	1-163-809-11	s	CERAMIC, CHIP 0.047uF 10% 25V
C217	1-164-232-11	s	CERAMIC, CHIP 0.01uF 10% 100V
C218	1-164-232-11	s	CERAMIC, CHIP 0.01uF 10% 100V
C219	1-126-163-11	s	ELECT 4.7uF 20% 50V
C220	1-163-809-11	s	CERAMIC, CHIP 0.047uF 10% 25V

(RP-74C BOARD(SVP-5600P))

Ref. No. or Q'ty	Part No.	SP	Description
C221	1-163-809-11	s	CERAMIC, CHIP 0.047uF 10% 25V
C252	1-164-232-11	s	CERAMIC, CHIP 0.01uF 10% 100V
C253	1-163-809-11	s	CERAMIC, CHIP 0.047uF 10% 25V
C254	1-163-809-11	s	CERAMIC, CHIP 0.047uF 10% 25V
C255	1-163-809-11	s	CERAMIC, CHIP 0.047uF 10% 25V
C256	1-163-809-11	s	CERAMIC, CHIP 0.047uF 10% 25V
C257	1-124-584-00	s	ELECT 100uF 20% 10V
C258	1-163-809-11	s	CERAMIC, CHIP 0.047uF 10% 25V
C259	1-164-232-11	s	CERAMIC, CHIP 0.01uF 10% 100V
C260	1-163-235-11	s	CERAMIC, CHIP 22PF 5% 50V
C261	1-164-232-11	s	CERAMIC, CHIP 0.01uF 10% 100V
C262	1-163-235-11	s	CERAMIC, CHIP 22PF 5% 50V
C263	1-164-232-11	s	CERAMIC, CHIP 0.01uF 10% 100V
C301	1-164-004-11	s	CERAMIC, CHIP 0.1uF 10% 25V
C302	1-164-004-11	s	CERAMIC, CHIP 0.1uF 10% 25V
C303	1-164-232-11	s	CERAMIC, CHIP 0.01uF 10% 100V
C304	1-164-232-11	s	CERAMIC, CHIP 0.01uF 10% 100V
C305	1-164-004-11	s	CERAMIC, CHIP 0.1uF 10% 25V
C306	1-124-584-00	s	ELECT 100uF 20% 10V
C307	1-164-232-11	s	CERAMIC, CHIP 0.01uF 10% 100V
C308	1-124-463-00	s	ELECT 0.1uF 20% 50V
C309	1-126-160-11	s	ELECT 1uF 20% 50V
C310	1-164-232-11	s	CERAMIC, CHIP 0.01uF 10% 100V
C311	1-164-232-11	s	CERAMIC, CHIP 0.01uF 10% 100V
C312	1-164-232-11	s	CERAMIC, CHIP 0.01uF 10% 100V
C313	1-163-251-11	s	CERAMIC, CHIP 100PF 5% 50V
C450	1-164-232-11	s	CERAMIC, CHIP 0.01uF 10% 100V
CN101	1-766-790-11	o	CONNECTOR, BB 12P, MALE
CN102	1-563-590-11	s	CONNECTOR, FPC 13P
CN103	1-564-031-00	o	CONNECTOR 6P, MALE
CN107	1-766-790-11	o	CONNECTOR, BB 12P, MALE
CN108	1-766-790-11	o	CONNECTOR, BB 12P, MALE
D100	8-719-801-78	s	DIODE 1S2837-T1
D103	8-719-801-78	s	DIODE 1S2837-T1
D105	8-719-801-78	s	DIODE 1S2837-T1
D106	8-719-801-78	s	DIODE 1S2837-T1
D108	8-719-801-78	s	DIODE 1S2837-T1
DL251	1-415-858-11	s	DELAY LINE 35ns
DL252	1-415-858-11	s	DELAY LINE 35ns
DL253	1-415-858-11	s	DELAY LINE 35ns
IC100	8-759-046-75	s	IC HA118162NT
IC200	8-759-998-32	s	IC CXD2107M-ELL20
IC251	8-759-012-00	s	IC MC10H116M
IC252	8-759-012-00	s	IC MC10H116M
IC253	8-759-012-01	s	IC MC10H117M
IC300	8-759-055-49	s	IC AN3327K
L100	1-408-425-00	s	INDUCTOR 220uH
L103	1-410-470-11	s	INDUCTOR 10uH
L104	1-410-471-11	s	INDUCTOR 12uH
L105	1-410-482-31	s	INDUCTOR 100uH
L106	1-410-470-11	s	INDUCTOR 10uH
L107	1-410-478-11	s	INDUCTOR 47uH
L108	1-410-482-31	s	INDUCTOR 100uH
L109	1-408-413-00	s	INDUCTOR 22uH
L110	1-408-416-00	s	INDUCTOR 39uH
L111	1-410-473-11	s	INDUCTOR 18uH
L112	1-410-482-31	s	INDUCTOR 100uH

(RP-74C BOARD(SVP-5600P))

Ref. No. or Q'ty	Part No.	SP	Description
L113	1-410-482-31	s	INDUCTOR 100uH
L202	1-410-482-31	s	INDUCTOR 100uH
L203	1-410-482-31	s	INDUCTOR 100uH
L251	1-410-482-31	s	INDUCTOR 100uH
L300	1-410-482-31	s	INDUCTOR 100uH
Q102	8-729-904-07	s	TRANSISTOR FMG2
Q103	8-729-230-49	s	TRANSISTOR 2SC2712-YG
Q104	8-729-907-26	s	TRANSISTOR IMX1
Q105	8-729-907-46	s	TRANSISTOR IMZ1
Q106	8-729-907-26	s	TRANSISTOR IMX1
Q108	8-729-216-22	s	TRANSISTOR 2SA1162
Q110	8-729-230-49	s	TRANSISTOR 2SC2712-YG
Q111	8-729-216-22	s	TRANSISTOR 2SA1162
Q112	8-729-230-49	s	TRANSISTOR 2SC2712-YG
Q116	8-729-216-22	s	TRANSISTOR 2SA1162
Q203	8-729-216-22	s	TRANSISTOR 2SA1162
Q204	8-729-901-06	s	TRANSISTOR DTA144EK
Q205	8-729-230-49	s	TRANSISTOR 2SC2712-YG
Q206	8-729-904-07	s	TRANSISTOR FMG2
Q251	8-729-230-49	s	TRANSISTOR 2SC2712-YG
Q252	8-729-230-49	s	TRANSISTOR 2SC2712-YG
Q253	8-729-216-22	s	TRANSISTOR 2SA1162
R100	1-216-043-91	s	METAL, CHIP 560 5% 1/10W
R101	1-216-626-11	s	METAL, CHIP 91 0.5% 1/10W
R104	1-216-613-11	s	METAL, CHIP 27 0.5% 1/10W
R105	1-216-626-11	s	METAL, CHIP 91 0.5% 1/10W
R106	1-216-626-11	s	METAL, CHIP 91 0.5% 1/10W
R107	1-216-613-11	s	METAL, CHIP 27 0.5% 1/10W
R110	1-216-627-11	s	METAL, CHIP 100 0.5% 1/10W
R111	1-216-049-00	s	METAL, CHIP 1K 5% 1/10W
R114	1-216-057-00	s	METAL, CHIP 2.2K 5% 1/10W
R115	1-216-081-00	s	METAL, CHIP 22K 5% 1/10W
R116	1-208-774-11	s	METAL, CHIP 470 0.50% 1/10W
R117	1-216-645-11	s	METAL, CHIP 560 0.5% 1/10W
R118	1-216-059-00	s	METAL, CHIP 2.7K 5% 1/10W
R119	1-216-025-00	s	METAL, CHIP 100 5% 1/10W
R120	1-208-784-11	s	METAL, CHIP 1.2K 0.50% 1/10W
R121	1-216-067-00	s	METAL, CHIP 5.6K 5% 1/10W
R122	1-216-051-00	s	METAL, CHIP 1.2K 5% 1/10W
R123	1-216-647-11	s	METAL, CHIP 680 0.5% 1/10W
R124	1-216-063-00	s	METAL, CHIP 3.9K 5% 1/10W
R125	1-208-774-11	s	METAL, CHIP 470 0.50% 1/10W
R126	1-216-047-00	s	METAL, CHIP 820 5% 1/10W
R127	1-216-057-00	s	METAL, CHIP 2.2K 5% 1/10W
R128	1-216-645-11	s	METAL, CHIP 560 0.5% 1/10W
R129	1-216-081-00	s	METAL, CHIP 22K 5% 1/10W
R130	1-208-774-11	s	METAL, CHIP 470 0.50% 1/10W
R131	1-216-049-00	s	METAL, CHIP 1K 5% 1/10W
R132	1-216-651-11	s	METAL, CHIP 1K 0.5% 1/10W
R133	1-216-635-11	s	METAL, CHIP 220 0.5% 1/10W
R134	1-216-081-00	s	METAL, CHIP 22K 5% 1/10W
R135	1-216-035-00	s	METAL, CHIP 270 5% 1/10W
R136	1-216-025-00	s	METAL, CHIP 100 5% 1/10W
R137	1-216-659-11	s	METAL, CHIP 2.2K 0.5% 1/10W
R138	1-216-073-00	s	METAL, CHIP 10K 5% 1/10W
R139	1-216-645-11	s	METAL, CHIP 560 0.5% 1/10W
R140	1-216-081-00	s	METAL, CHIP 22K 5% 1/10W
R141	1-216-651-11	s	METAL, CHIP 1K 0.5% 1/10W

(RP-74C BOARD(SVP-5600P))

Ref. No. or Q'ty	Part No.	SP	Description
R142	1-216-647-11	s	METAL, CHIP 680 0.5% 1/10W
R143	1-216-081-00	s	METAL, CHIP 22K 5% 1/10W
R144	1-208-784-11	s	METAL, CHIP 1.2K 0.50% 1/10W
R145	1-216-073-00	s	METAL, CHIP 10K 5% 1/10W
R147	1-216-641-11	s	METAL, CHIP 390 0.5% 1/10W
R149	1-216-649-11	s	METAL, CHIP 820 0.5% 1/10W
R150	1-216-077-00	s	METAL, CHIP 15K 5% 1/10W
R151	1-216-651-11	s	METAL, CHIP 1K 0.5% 1/10W
R152	1-216-077-00	s	METAL, CHIP 15K 5% 1/10W
R153	1-216-649-11	s	METAL, CHIP 820 0.5% 1/10W
R154	1-216-645-11	s	METAL, CHIP 560 0.5% 1/10W
R155	1-216-077-00	s	METAL, CHIP 15K 5% 1/10W
R156	1-216-045-00	s	METAL, CHIP 680 5% 1/10W
R157	1-216-081-00	s	METAL, CHIP 22K 5% 1/10W
R159	1-216-295-91	s	RES, CHIP 0
R170	1-216-295-91	s	RES, CHIP 0
R208	1-216-053-00	s	METAL, CHIP 1.5K 5% 1/10W
R209	1-216-049-00	s	METAL, CHIP 1K 5% 1/10W
R210	1-216-047-00	s	METAL, CHIP 820 5% 1/10W
R212	1-216-295-91	s	RES, CHIP 0
R213	1-216-065-00	s	METAL, CHIP 4.7K 5% 1/10W
R214	1-216-073-00	s	METAL, CHIP 10K 5% 1/10W
R215	1-216-041-00	s	METAL, CHIP 470 5% 1/10W
R217	1-216-085-00	s	METAL, CHIP 33K 5% 1/10W
R250	1-216-647-11	s	METAL, CHIP 680 0.5% 1/10W
R251	1-216-651-11	s	METAL, CHIP 1K 0.5% 1/10W
R252	1-216-049-00	s	METAL, CHIP 1K 5% 1/10W
R253	1-208-767-11	s	METAL, CHIP 240 0.5% 1/10W
R254	1-208-774-11	s	METAL, CHIP 470 0.50% 1/10W
R255	1-216-049-00	s	METAL, CHIP 1K 5% 1/10W
R256	1-216-649-11	s	METAL, CHIP 820 0.5% 1/10W
R257	1-216-041-00	s	METAL, CHIP 470 5% 1/10W
R258	1-208-767-11	s	METAL, CHIP 240 0.5% 1/10W
R259	1-208-774-11	s	METAL, CHIP 470 0.50% 1/10W
R260	1-216-049-00	s	METAL, CHIP 1K 5% 1/10W
R261	1-208-784-11	s	METAL, CHIP 1.2K 0.50% 1/10W
R262	1-216-041-00	s	METAL, CHIP 470 5% 1/10W
R263	1-216-049-00	s	METAL, CHIP 1K 5% 1/10W
R264	1-216-635-11	s	METAL, CHIP 220 0.5% 1/10W
R265	1-216-049-00	s	METAL, CHIP 1K 5% 1/10W
R266	1-216-041-00	s	METAL, CHIP 470 5% 1/10W
R267	1-216-651-11	s	METAL, CHIP 1K 0.5% 1/10W
R268	1-216-651-11	s	METAL, CHIP 1K 0.5% 1/10W
R269	1-208-774-11	s	METAL, CHIP 470 0.50% 1/10W
R270	1-216-049-00	s	METAL, CHIP 1K 5% 1/10W
R271	1-216-639-11	s	METAL, CHIP 330 0.5% 1/10W
R272	1-216-049-00	s	METAL, CHIP 1K 5% 1/10W
R273	1-216-049-00	s	METAL, CHIP 1K 5% 1/10W
R274	1-216-049-00	s	METAL, CHIP 1K 5% 1/10W
R275	1-216-049-00	s	METAL, CHIP 1K 5% 1/10W
R276	1-216-035-00	s	METAL, CHIP 270 5% 1/10W
R277	1-216-041-00	s	METAL, CHIP 470 5% 1/10W
R278	1-216-065-00	s	METAL, CHIP 4.7K 5% 1/10W
R279	1-216-065-00	s	METAL, CHIP 4.7K 5% 1/10W
R280	1-216-295-91	s	RES, CHIP 0
R281	1-216-049-00	s	METAL, CHIP 1K 5% 1/10W
R283	1-216-687-11	s	METAL, CHIP 33K 0.5% 1/10W
R284	1-216-683-11	s	METAL, CHIP 22K 0.5% 1/10W
R285	1-216-689-11	s	METAL, CHIP 39K 0.5% 1/10W

(RP-74C BOARD(SVP-5600P))

Ref. No. or Q'ty	Part No.	SP	Description
R302	1-216-035-00	s	METAL, CHIP 270 5% 1/10W
R303	1-216-033-00	s	METAL, CHIP 220 5% 1/10W
R304	1-216-035-00	s	METAL, CHIP 270 5% 1/10W
R305	1-208-812-11	s	METAL, CHIP 18K 0.5% 1/10W
R306	1-216-067-00	s	METAL, CHIP 5.6K 5% 1/10W
R307	1-216-051-00	s	METAL, CHIP 1.2K 5% 1/10W
R309	1-216-295-91	s	RES, CHIP 0
RB101	1-239-389-11	s	RESISTOR BLOCK, CHIP 47Kx4

SE-224 BOARD

Ref. No. or Q'ty	Part No.	SP	Description
1pc	1-650-153-11	o	PRINTED CIRCUIT BOARD, SE-224
1pc	3-167-013-02	o	HOLDER, ST SENSOR
CN601	1-564-001-11	o	CONNECTOR 2P, MALE
Q1	8-729-926-31	s	PHOTO TRANSISTOR PT483F1

SE-230 BOARD

Ref. No. or Q'ty	Part No.	SP	Description
1pc	1-650-347-11	o	PRINTED CIRCUIT BOARD, SE-230
PC1	1-806-232-21	s	DETECTOR MB-1102/S.N

SS-58A BOARD(SVO-5800P)

Ref. No. or Q'ty	Part No.	SP	Description

SS-58A board is used for SVO-5800P(EK).

1pc	A-8265-868-A	o	MOUNTED CIRCUIT BOARD, SS-58A
1pc	3-179-084-01	s	LEVER (R), PC BOARD
1pc	3-179-085-01	s	LEVER (L), PC BOARD
C101	1-163-037-11	s	CERAMIC, CHIP 0.022uF 10% 25V
C102	1-124-126-00	s	ELECT 47uF 20% 25V
C103	1-163-037-11	s	CERAMIC, CHIP 0.022uF 10% 25V
C104	1-163-037-11	s	CERAMIC, CHIP 0.022uF 10% 25V
C106	1-163-275-11	s	CERAMIC, CHIP 0.001uF 5% 50V
C107	1-163-275-11	s	CERAMIC, CHIP 0.001uF 5% 50V
C108	1-163-809-11	s	CERAMIC, CHIP 0.047uF 10% 25V
C110	1-163-133-00	s	CERAMIC, CHIP 470PF 5% 50V
C111	1-126-964-11	s	ELECT 10uF 20% 50V
C112	1-163-275-11	s	CERAMIC, CHIP 0.001uF 5% 50V
C113	1-164-232-11	s	CERAMIC, CHIP 0.01uF 10% 100V
C114	1-163-275-11	s	CERAMIC, CHIP 0.001uF 5% 50V
C115	1-163-133-00	s	CERAMIC, CHIP 470PF 5% 50V
C116	1-164-232-11	s	CERAMIC, CHIP 0.01uF 10% 100V
C117	1-163-275-11	s	CERAMIC, CHIP 0.001uF 5% 50V
C118	1-163-037-11	s	CERAMIC, CHIP 0.022uF 10% 25V
C120	1-126-966-11	s	ELECT 33uF 20% 50V
C121	1-163-097-00	s	CERAMIC, CHIP 15PF 5% 50V
C122	1-163-097-00	s	CERAMIC, CHIP 15PF 5% 50V
C123	1-124-126-00	s	ELECT 47uF 20% 25V
C124	1-124-126-00	s	ELECT 47uF 20% 25V
C125	1-124-126-00	s	ELECT 47uF 20% 25V
C126	1-124-916-11	s	ELECT 22uF 20% 63V
C127	1-163-037-11	s	CERAMIC, CHIP 0.022uF 10% 25V
C128	1-124-925-11	s	ELECT 2.2uF 20% 100V
C129	1-163-037-11	s	CERAMIC, CHIP 0.022uF 10% 25V
C302	1-163-145-00	s	CERAMIC, CHIP 0.0015uF 5% 50V
C303	1-163-263-11	s	CERAMIC, CHIP 330PF 5% 50V
C304	1-164-699-11	s	CERAMIC, CHIP 0.0033uF 5% 50V
C305	1-163-275-11	s	CERAMIC, CHIP 0.001uF 5% 50V
C306	1-163-275-11	s	CERAMIC, CHIP 0.001uF 5% 50V
C307	1-164-695-11	s	CERAMIC 0.0022uF 5% 50V
C308	1-163-275-11	s	CERAMIC, CHIP 0.001uF 5% 50V
C309	1-163-263-11	s	CERAMIC, CHIP 330PF 5% 50V
C315	1-163-016-00	s	CERAMIC CHIP 0.0039MF 10% 50V
C316	1-163-016-00	s	CERAMIC CHIP 0.0039MF 10% 50V
C318	1-124-916-11	s	ELECT 22uF 20% 63V
C319	1-163-037-11	s	CERAMIC, CHIP 0.022uF 10% 25V
C320	1-124-126-00	s	ELECT 47uF 20% 25V
C323	1-124-916-11	s	ELECT 22uF 20% 63V
C324	1-124-902-00	s	ELECT 0.47uF 20% 50V
C326	1-163-037-11	s	CERAMIC, CHIP 0.022uF 10% 25V
C327	1-163-037-11	s	CERAMIC, CHIP 0.022uF 10% 25V
C328	1-163-037-11	s	CERAMIC, CHIP 0.022uF 10% 25V
C329	1-163-037-11	s	CERAMIC, CHIP 0.022uF 10% 25V
C330	1-163-037-11	s	CERAMIC, CHIP 0.022uF 10% 25V
C331	1-163-037-11	s	CERAMIC, CHIP 0.022uF 10% 25V
C332	1-163-037-11	s	CERAMIC, CHIP 0.022uF 10% 25V
C401	1-124-916-11	s	ELECT 22uF 20% 63V
C402	1-163-037-11	s	CERAMIC, CHIP 0.022uF 10% 25V
C403	1-124-916-11	s	ELECT 22uF 20% 63V
C404	1-163-275-11	s	CERAMIC, CHIP 0.001uF 5% 50V
C405	1-163-251-11	s	CERAMIC, CHIP 100PF 5% 50V
C406	1-163-019-00	s	CERAMIC, CHIP 0.0068uF 10% 50V

(SS-58A BOARD(SVO-5800P))

Ref. No. or Q'ty	Part No.	SP	Description
C407	1-163-113-00	s	CERAMIC, CHIP 68PF 5% 50V
C408	1-164-232-11	s	CERAMIC, CHIP 0.01uF 10% 100V
C409	1-124-916-11	s	ELECT 22uF 20% 63V
C410	1-124-916-11	s	ELECT 22uF 20% 63V
C411	1-163-017-00	s	CERAMIC, CHIP 0.0047uF 5% 50V
C412	1-164-232-11	s	CERAMIC, CHIP 0.01uF 10% 100V
C413	1-126-964-11	s	ELECT 10uF 20% 50V
C414	1-163-017-00	s	CERAMIC, CHIP 0.0047uF 5% 50V
C418	1-163-037-11	s	CERAMIC, CHIP 0.022uF 10% 25V
C419	1-163-037-11	s	CERAMIC, CHIP 0.022uF 10% 25V
C501	1-124-126-00	s	ELECT 47uF 20% 25V
C502	1-124-126-00	s	ELECT 47uF 20% 25V
C503	1-124-126-00	s	ELECT 47uF 20% 25V
C504	1-164-695-11	s	CERAMIC 0.0022uF 5% 50V
C505	1-163-037-11	s	CERAMIC, CHIP 0.022uF 10% 25V
C506	1-163-235-11	s	CERAMIC, CHIP 22PF 5% 50V
C507	1-163-037-11	s	CERAMIC, CHIP 0.022uF 10% 25V
C508	1-124-126-00	s	ELECT 47uF 20% 25V
C509	1-164-232-11	s	CERAMIC, CHIP 0.01uF 10% 100V
C510	1-124-126-00	s	ELECT 47uF 20% 25V
C511	1-126-964-11	s	ELECT 10uF 20% 50V
C512	1-124-126-00	s	ELECT 47uF 20% 25V
C513	1-163-037-11	s	CERAMIC, CHIP 0.022uF 10% 25V
C515	1-124-916-11	s	ELECT 22uF 20% 63V
C517	1-163-241-11	s	CERAMIC, CHIP 39PF 5% 50V
C518	1-163-239-11	s	CERAMIC, CHIP 33PF 5% 50V
C519	1-164-232-11	s	CERAMIC, CHIP 0.01uF 10% 100V
C520	1-164-695-11	s	CERAMIC 0.0022uF 5% 50V
C521	1-163-235-11	s	CERAMIC, CHIP 22PF 5% 50V
C522	1-163-235-11	s	CERAMIC, CHIP 22PF 5% 50V
C523	1-163-145-00	s	CERAMIC, CHIP 0.0015uF 5% 50V
C524	1-124-903-11	s	ELECT 1uF 20% 50V
C525	1-163-251-11	s	CERAMIC, CHIP 100PF 5% 50V
C526	1-124-916-11	s	ELECT 22uF 20% 63V
C527	1-124-916-11	s	ELECT 22uF 20% 63V
C529	1-124-916-11	s	ELECT 22uF 20% 63V
C530	1-164-232-11	s	CERAMIC, CHIP 0.01uF 10% 100V
C531	1-124-126-00	s	ELECT 47uF 20% 25V
C532	1-124-126-00	s	ELECT 47uF 20% 25V
C533	1-124-126-00	s	ELECT 47uF 20% 25V
C534	1-164-232-11	s	CERAMIC, CHIP 0.01uF 10% 100V
C535	1-124-902-00	s	ELECT 0.47uF 20% 50V
C536	1-124-126-00	s	ELECT 47uF 20% 25V
C537	1-164-232-11	s	CERAMIC, CHIP 0.01uF 10% 100V
C538	1-163-133-00	s	CERAMIC, CHIP 470PF 5% 50V
C539	1-163-133-00	s	CERAMIC, CHIP 470PF 5% 50V
C540	1-163-235-11	s	CERAMIC, CHIP 22PF 5% 50V
C541	1-163-235-11	s	CERAMIC, CHIP 22PF 5% 50V
C542	1-163-125-00	s	CERAMIC, CHIP 220PF 5% 50V
C543	1-163-037-11	s	CERAMIC, CHIP 0.022uF 10% 25V
C544	1-124-126-00	s	ELECT 47uF 20% 25V
C545	1-163-133-00	s	CERAMIC, CHIP 470PF 5% 50V
C546	1-163-137-00	s	CERAMIC, CHIP 680PF 5% 50V
C547	1-163-125-00	s	CERAMIC, CHIP 220PF 5% 50V
C548	1-163-037-11	s	CERAMIC, CHIP 0.022uF 10% 25V
C549	1-163-037-11	s	CERAMIC, CHIP 0.022uF 10% 25V
C550	1-163-037-11	s	CERAMIC, CHIP 0.022uF 10% 25V
C551	1-163-037-11	s	CERAMIC, CHIP 0.022uF 10% 25V
C552	1-163-809-11	s	CERAMIC, CHIP 0.047uF 10% 25V

(SS-58A BOARD(SVO-5800P))

Ref. No. or Q'ty	Part No.	SP	Description
C553	1-163-037-11	s	CERAMIC, CHIP 0.022uF 10% 25V
C554	1-164-232-11	s	CERAMIC, CHIP 0.01uF 10% 100V
C602	1-163-037-11	s	CERAMIC, CHIP 0.022uF 10% 25V
C603	1-163-037-11	s	CERAMIC, CHIP 0.022uF 10% 25V
C604	1-163-037-11	s	CERAMIC, CHIP 0.022uF 10% 25V
C606	1-162-207-31	s	CERAMIC 22PF 5% 50V
C607	1-126-933-11	s	ELECT 100uF 20% 16V
C608	1-164-232-11	s	CERAMIC, CHIP 0.01uF 10% 100V
C609	1-164-232-11	s	CERAMIC, CHIP 0.01uF 10% 100V
C610	1-164-232-11	s	CERAMIC, CHIP 0.01uF 10% 100V
C611	1-163-229-11	s	CERAMIC, CHIP 12PF 5% 50V
C612	1-164-232-11	s	CERAMIC, CHIP 0.01uF 10% 100V
C613	1-126-933-11	s	ELECT 100uF 20% 16V
C614	1-164-004-11	s	CERAMIC, CHIP 0.1uF 10% 25V
C615	1-163-253-11	s	CERAMIC, CHIP 120PF 5% 50V
C616	1-163-257-11	s	CERAMIC, CHIP 180PF 5% 50V
C617	1-163-809-11	s	CERAMIC, CHIP 0.047uF 10% 25V
C618	1-164-232-11	s	CERAMIC, CHIP 0.01uF 10% 100V
C619	1-164-232-11	s	CERAMIC, CHIP 0.01uF 10% 100V
C620	1-164-232-11	s	CERAMIC, CHIP 0.01uF 10% 100V
C621	1-164-232-11	s	CERAMIC, CHIP 0.01uF 10% 100V
C622	1-164-232-11	s	CERAMIC, CHIP 0.01uF 10% 100V
C623	1-164-232-11	s	CERAMIC, CHIP 0.01uF 10% 100V
C624	1-164-232-11	s	CERAMIC, CHIP 0.01uF 10% 100V
C625	1-164-232-11	s	CERAMIC, CHIP 0.01uF 10% 100V
C626	1-164-232-11	s	CERAMIC, CHIP 0.01uF 10% 100V
C627	1-164-232-11	s	CERAMIC, CHIP 0.01uF 10% 100V
C628	1-164-489-11	s	CERAMIC, CHIP 0.22uF 10% 16V
C629	1-164-004-11	s	CERAMIC, CHIP 0.1uF 10% 25V
C630	1-163-229-11	s	CERAMIC, CHIP 12PF 5% 50V
C631	1-164-232-11	s	CERAMIC, CHIP 0.01uF 10% 100V
C632	1-164-232-11	s	CERAMIC, CHIP 0.01uF 10% 100V
C633	1-164-232-11	s	CERAMIC, CHIP 0.01uF 10% 100V
C634	1-163-257-11	s	CERAMIC, CHIP 180PF 5% 50V
C635	1-164-232-11	s	CERAMIC, CHIP 0.01uF 10% 100V
C636	1-163-133-00	s	CERAMIC, CHIP 470PF 5% 50V
C637	1-164-004-11	s	CERAMIC, CHIP 0.1uF 10% 25V
C638	1-126-964-11	s	ELECT 10uF 20% 50V
C639	1-163-037-11	s	CERAMIC, CHIP 0.022uF 10% 25V
C640	1-164-232-11	s	CERAMIC, CHIP 0.01uF 10% 100V
C641	1-163-275-11	s	CERAMIC, CHIP 0.001uF 5% 50V
C642	1-164-004-11	s	CERAMIC, CHIP 0.1uF 10% 25V
C643	1-163-227-11	s	CERAMIC, CHIP 10PF 5% 50V
C644	1-163-222-11	s	CERAMIC, CHIP 5PF 50V
C645	1-163-243-11	s	CERAMIC, CHIP 47PF 5% 50V
C646	1-163-275-11	s	CERAMIC, CHIP 0.001uF 5% 50V
C647	1-124-126-00	s	ELECT 47uF 20% 25V
C649	1-126-933-11	s	ELECT 100uF 20% 16V
C650	1-164-232-11	s	CERAMIC, CHIP 0.01uF 10% 100V
C651	1-124-925-11	s	ELECT 2.2uF 20% 100V
C652	1-164-232-11	s	CERAMIC, CHIP 0.01uF 10% 100V
C653	1-164-232-11	s	CERAMIC, CHIP 0.01uF 10% 100V
C654	1-163-251-11	s	CERAMIC, CHIP 100PF 5% 50V
C655	1-124-927-11	s	ELECT 4.7uF 20% 100V
C656	1-124-903-11	s	ELECT 1uF 20% 50V
C657	1-164-004-11	s	CERAMIC, CHIP 0.1uF 10% 25V
C659	1-163-125-00	s	CERAMIC, CHIP 220PF 5% 50V
C660	1-163-809-11	s	CERAMIC, CHIP 0.047uF 10% 25V
C661	1-124-925-11	s	ELECT 2.2uF 20% 100V

(SS-58A BOARD(SVO-5800P))

Ref. No. or Q'ty	Part No.	SP	Description
C667	1-163-125-00	s	CERAMIC, CHIP 220PF 5% 50V
C668	1-164-344-11	s	CERAMIC, CHIP 0.068uF 10% 25V
C669	1-164-004-11	s	CERAMIC, CHIP 0.1uF 10% 25V
C670	1-126-933-11	s	ELECT 100uF 20% 16V
C673	1-126-933-11	s	ELECT 100uF 20% 16V
C674	1-164-004-11	s	CERAMIC, CHIP 0.1uF 10% 25V
C675	1-163-037-11	s	CERAMIC, CHIP 0.022uF 10% 25V
C676	1-163-037-11	s	CERAMIC, CHIP 0.022uF 10% 25V
CN1	1-506-491-11	s	CONNECTOR 12P, MALE
CN301	1-766-793-11	o	CONNECTOR, DIN 64P, MALE
CN302	1-766-793-11	o	CONNECTOR, DIN 64P, MALE
CN303	1-766-793-11	o	CONNECTOR, DIN 64P, MALE
CN310	1-564-002-11	s	CONNECTOR 3P, MALE
D103	8-719-938-75	s	DIODE SB05-05CP
D301	8-719-104-34	s	DIODE 1S2835
D303	8-719-104-34	s	DIODE 1S2835
D401	8-719-157-36	s	DIODE RD6.8M-B
D402	8-719-104-34	s	DIODE 1S2835
D403	8-719-104-34	s	DIODE 1S2835
D404	8-719-104-34	s	DIODE 1S2835
D405	8-719-104-34	s	DIODE 1S2835
D502	8-719-800-76	s	DIODE 1SS226
D503	8-719-157-33	s	DIODE RD6.2M-T1B
D505	8-719-800-76	s	DIODE 1SS226
D507	8-719-800-76	s	DIODE 1SS226
IC101	8-752-853-69	s	IC CXP87132-030Q
IC102	8-759-700-07	s	IC NJM2903M
IC103	8-759-100-96	s	IC UPC4558G2
IC104	8-759-512-71	s	IC S-8054HNM
IC105	8-759-745-64	s	IC NJM4560M
IC301	8-759-700-07	s	IC NJM2903M
IC302	8-759-009-51	s	IC MC14538BF
IC303	8-759-008-86	s	IC MC14017BF-T2
IC304	8-759-009-51	s	IC MC14538BF
IC305	8-759-008-82	s	IC MC14013BF
IC308	8-743-915-10	s	IC BX3915A
IC309	8-759-300-71	s	IC HD14053BFP
IC310	8-759-009-51	s	IC MC14538BF
IC401	8-759-300-71	s	IC HD14053BFP
IC402	8-759-711-82	s	IC NJM4580E(T2)
IC403	8-759-700-07	s	IC NJM2903M
IC501	8-759-100-96	s	IC UPC4558G2
IC502	8-759-700-07	s	IC NJM2903M
IC503	8-759-711-32	s	IC NJM2245M
IC504	8-759-912-64	s	IC PA0009
IC505	8-759-925-80	s	IC SN74HC14ANS
IC506	8-759-925-74	s	IC TC74HC04ANS
IC507	8-759-300-71	s	IC HD14053BFP
IC508	8-759-300-71	s	IC HD14053BFP
IC509	8-759-009-51	s	IC MC14538BF
IC510	8-759-009-02	s	IC MC14046BF
IC511	8-759-925-76	s	IC SN74HC08ANS
IC512	8-759-300-71	s	IC HD14053BFP
IC513	8-759-009-11	s	IC MC14070BF
IC514	8-759-925-76	s	IC SN74HC08ANS
IC515	8-759-280-91	s	IC CXD8937M
IC516	8-759-146-73	s	IC CXD8042Q-502
IC517	8-759-944-79	s	IC CXD1132Q

(SS-58A BOARD(SVO-5800P))

Ref. No. or Q'ty	Part No.	SP	Description
IC518	8-759-332-36	s	IC UPD78056GC-045-3B9
IC519	8-759-061-67	s	IC MC34051M
IC520	8-759-100-96	s	IC UPC4558G2
IC521	8-759-095-42	s	IC CXD8343AP
IC601	8-759-710-86	s	IC NJM2233BM-T1
IC602	8-759-710-86	s	IC NJM2233BM-T1
IC603	8-759-634-93	s	IC M52059AFP
IC604	8-759-925-74	s	IC TC74HC04ANS
IC605	8-759-076-46	s	IC CXD8371M
IC606	8-759-009-51	s	IC MC14538BF
IC608	8-759-908-17	s	IC TL082CPS
L101	1-410-645-31	s	INDUCTOR 100uH
L302	1-410-645-31	s	INDUCTOR 100uH
L401	1-410-645-31	s	INDUCTOR 100uH
L501	1-410-645-31	s	INDUCTOR 100uH
L502	1-410-091-31	s	INDUCTOR 22mH
L503	1-410-645-31	s	INDUCTOR 100uH
L504	1-412-390-21	s	FILTER, CHIP NOISE(21A05)
L602	1-410-645-31	s	INDUCTOR 100uH
L603	1-410-645-31	s	INDUCTOR 100uH
L604	1-410-473-11	s	INDUCTOR 18uH
L605	1-410-468-11	s	INDUCTOR 6.8uH
L606	1-410-645-31	s	INDUCTOR 100uH
L607	1-410-468-11	s	INDUCTOR 6.8uH
L609	1-410-478-11	s	INDUCTOR 47uH
L610	1-410-645-31	s	INDUCTOR 100uH
L612	1-410-645-31	s	INDUCTOR 100uH
Q103	8-729-216-22	s	TRANSISTOR 2SA1162
Q104	8-729-230-49	s	TRANSISTOR 2SC2712-YG
Q105	8-729-901-01	s	TRANSISTOR DTC144EK
Q106	8-729-119-77	s	TRANSISTOR 2SA1175-FEK
Q107	8-729-230-49	s	TRANSISTOR 2SC2712-YG
Q108	8-729-230-49	s	TRANSISTOR 2SC2712-YG
Q109	8-729-230-49	s	TRANSISTOR 2SC2712-YG
Q306	8-729-230-49	s	TRANSISTOR 2SC2712-YG
Q309	8-729-901-05	s	TRANSISTOR DTA124EK
Q401	8-729-230-49	s	TRANSISTOR 2SC2712-YG
Q402	8-729-230-49	s	TRANSISTOR 2SC2712-YG
Q403	8-729-901-05	s	TRANSISTOR DTA124EK
Q404	8-729-901-01	s	TRANSISTOR DTC144EK
Q405	8-729-230-49	s	TRANSISTOR 2SC2712-YG
Q406	8-729-230-49	s	TRANSISTOR 2SC2712-YG
Q407	8-729-230-49	s	TRANSISTOR 2SC2712-YG
Q408	8-729-230-49	s	TRANSISTOR 2SC2712-YG
Q409	8-729-230-49	s	TRANSISTOR 2SC2712-YG
Q503	8-729-901-01	s	TRANSISTOR DTC144EK
Q504	8-729-901-01	s	TRANSISTOR DTC144EK
Q505	8-729-230-49	s	TRANSISTOR 2SC2712-YG
Q506	8-729-230-49	s	TRANSISTOR 2SC2712-YG
Q507	8-729-230-49	s	TRANSISTOR 2SC2712-YG
Q601	8-729-230-49	s	TRANSISTOR 2SC2712-YG
Q602	8-729-901-01	s	TRANSISTOR DTC144EK
Q603	8-729-230-49	s	TRANSISTOR 2SC2712-YG
Q605	8-729-230-49	s	TRANSISTOR 2SC2712-YG
Q607	8-729-230-49	s	TRANSISTOR 2SC2712-YG
Q608	8-729-230-49	s	TRANSISTOR 2SC2712-YG
Q610	8-729-230-49	s	TRANSISTOR 2SC2712-YG

(SS-58A BOARD(SVO-5800P))

Ref. No. or Q'ty	Part No.	SP	Description
Q611	8-729-901-01	s	TRANSISTOR DTC144EK
Q612	8-729-230-49	s	TRANSISTOR 2SC2712-YG
R101	1-216-089-00	s	METAL, CHIP 47K 5% 1/10W
R102	1-216-089-00	s	METAL, CHIP 47K 5% 1/10W
R103	1-216-089-00	s	METAL, CHIP 47K 5% 1/10W
R110	1-216-073-00	s	METAL, CHIP 10K 5% 1/10W
R111	1-216-073-00	s	METAL, CHIP 10K 5% 1/10W
R112	1-208-817-11	s	METAL, CHIP 30K 0.50% 1/10W
R113	1-216-063-00	s	METAL, CHIP 3.9K 5% 1/10W
R114	1-216-065-00	s	METAL, CHIP 4.7K 5% 1/10W
R115	1-216-648-11	s	METAL, CHIP 750 0.5% 1/10W
R116	1-216-097-00	s	METAL, CHIP 100K 5% 1/10W
R118	1-216-073-00	s	METAL, CHIP 10K 5% 1/10W
R119	1-216-109-00	s	METAL, CHIP 330K 5% 1/10W
R129	1-216-121-00	s	METAL, CHIP 1M 5% 1/10W
R130	1-216-081-00	s	METAL, CHIP 22K 5% 1/10W
R131	1-216-105-91	s	METAL, CHIP 220K 5% 1/10W
R132	1-216-073-00	s	METAL, CHIP 10K 5% 1/10W
R133	1-216-049-00	s	METAL, CHIP 1K 5% 1/10W
R134	1-216-049-00	s	METAL, CHIP 1K 5% 1/10W
R135	1-216-691-11	s	METAL, CHIP 47K 0.5% 1/10W
R136	1-216-694-11	s	METAL, CHIP 62K 0.5% 1/10W
R137	1-216-049-00	s	METAL, CHIP 1K 5% 1/10W
R138	1-216-065-00	s	METAL, CHIP 4.7K 5% 1/10W
R139	1-216-073-00	s	METAL, CHIP 10K 5% 1/10W
R140	1-216-065-00	s	METAL, CHIP 4.7K 5% 1/10W
R141	1-216-089-00	s	METAL, CHIP 47K 5% 1/10W
R142	1-216-121-00	s	METAL, CHIP 1M 5% 1/10W
R143	1-216-081-00	s	METAL, CHIP 22K 5% 1/10W
R144	1-216-105-91	s	METAL, CHIP 220K 5% 1/10W
R145	1-216-073-00	s	METAL, CHIP 10K 5% 1/10W
R146	1-216-049-00	s	METAL, CHIP 1K 5% 1/10W
R149	1-216-089-00	s	METAL, CHIP 47K 5% 1/10W
R150	1-216-049-00	s	METAL, CHIP 1K 5% 1/10W
R151	1-216-065-00	s	METAL, CHIP 4.7K 5% 1/10W
R152	1-216-065-00	s	METAL, CHIP 4.7K 5% 1/10W
R153	1-216-049-00	s	METAL, CHIP 1K 5% 1/10W
R154	1-216-049-00	s	METAL, CHIP 1K 5% 1/10W
R155	1-216-105-91	s	METAL, CHIP 220K 5% 1/10W
R156	1-216-049-00	s	METAL, CHIP 1K 5% 1/10W
R157	1-216-081-00	s	METAL, CHIP 22K 5% 1/10W
R162	1-216-081-00	s	METAL, CHIP 22K 5% 1/10W
R163	1-216-081-00	s	METAL, CHIP 22K 5% 1/10W
R175	1-216-049-00	s	METAL, CHIP 1K 5% 1/10W
R176	1-216-065-00	s	METAL, CHIP 4.7K 5% 1/10W
R301	1-216-073-00	s	METAL, CHIP 10K 5% 1/10W
R303	1-216-097-00	s	METAL, CHIP 100K 5% 1/10W
R304	1-216-097-00	s	METAL, CHIP 100K 5% 1/10W
R305	1-216-073-00	s	METAL, CHIP 10K 5% 1/10W
R306	1-216-073-00	s	METAL, CHIP 10K 5% 1/10W
R309	1-216-073-00	s	METAL, CHIP 10K 5% 1/10W
R310	1-216-049-00	s	METAL, CHIP 1K 5% 1/10W
R311	1-216-049-00	s	METAL, CHIP 1K 5% 1/10W
R312	1-216-073-00	s	METAL, CHIP 10K 5% 1/10W
R320	1-208-824-11	s	METAL, CHIP 56K 0.5% 1/10W
R321	1-216-065-00	s	METAL, CHIP 4.7K 5% 1/10W
R322	1-208-800-11	s	METAL, CHIP 5.6K 0.5% 1/10W
R323	1-216-073-00	s	METAL, CHIP 10K 5% 1/10W

(SS-58A BOARD(SVO-5800P))

Ref. No. or Q'ty	Part No.	SP	Description
R326	1-216-081-00	s	METAL, CHIP 22K 5% 1/10W
R327	1-216-697-91	s	METAL, CHIP 82K 0.5% 1/10W
R329	1-216-081-00	s	METAL, CHIP 22K 5% 1/10W
R330	1-216-685-11	s	METAL, CHIP 27K 0.5% 1/10W
R331	1-216-690-11	s	METAL, CHIP 43K 0.5% 1/10W
R333	1-216-691-11	s	METAL, CHIP 47K 0.5% 1/10W
R334	1-216-073-00	s	METAL, CHIP 10K 5% 1/10W
R335	1-216-097-00	s	METAL, CHIP 100K 5% 1/10W
R345	1-216-073-00	s	METAL, CHIP 10K 5% 1/10W
R347	1-216-117-00	s	METAL, CHIP 680K 5% 1/10W
R348	1-216-117-00	s	METAL, CHIP 680K 5% 1/10W
R350	1-216-051-00	s	METAL, CHIP 1.2K 5% 1/10W
R351	1-216-650-11	s	METAL, CHIP 910 0.5% 1/10W
R352	1-216-049-00	s	METAL, CHIP 1K 5% 1/10W
R355	1-216-097-00	s	METAL, CHIP 100K 5% 1/10W
R401	1-216-065-00	s	METAL, CHIP 4.7K 5% 1/10W
R402	1-216-073-00	s	METAL, CHIP 10K 5% 1/10W
R403	1-216-073-00	s	METAL, CHIP 10K 5% 1/10W
R404	1-216-073-00	s	METAL, CHIP 10K 5% 1/10W
R405	1-216-065-00	s	METAL, CHIP 4.7K 5% 1/10W
R406	1-216-065-00	s	METAL, CHIP 4.7K 5% 1/10W
R407	1-216-699-11	s	METAL, CHIP 100K 0.5% 1/10W
R408	1-216-121-00	s	METAL, CHIP 1M 5% 1/10W
R409	1-216-081-00	s	METAL, CHIP 22K 5% 1/10W
R410	1-216-121-00	s	METAL, CHIP 1M 5% 1/10W
R411	1-216-097-00	s	METAL, CHIP 100K 5% 1/10W
R412	1-216-057-00	s	METAL, CHIP 2.2K 5% 1/10W
R413	1-216-039-00	s	METAL, CHIP 390 5% 1/10W
R414	1-216-073-00	s	METAL, CHIP 10K 5% 1/10W
R415	1-216-065-00	s	METAL, CHIP 4.7K 5% 1/10W
R416	1-216-073-00	s	METAL, CHIP 10K 5% 1/10W
R417	1-216-073-00	s	METAL, CHIP 10K 5% 1/10W
R418	1-216-089-00	s	METAL, CHIP 47K 5% 1/10W
R419	1-216-089-00	s	METAL, CHIP 47K 5% 1/10W
R420	1-216-073-00	s	METAL, CHIP 10K 5% 1/10W
R421	1-216-073-00	s	METAL, CHIP 10K 5% 1/10W
R422	1-216-113-00	s	METAL, CHIP 470K 5% 1/10W
R423	1-216-065-00	s	METAL, CHIP 4.7K 5% 1/10W
R424	1-216-089-00	s	METAL, CHIP 47K 5% 1/10W
R425	1-216-073-00	s	METAL, CHIP 10K 5% 1/10W
R426	1-216-065-00	s	METAL, CHIP 4.7K 5% 1/10W
R428	1-216-057-00	s	METAL, CHIP 2.2K 5% 1/10W
R429	1-216-073-00	s	METAL, CHIP 10K 5% 1/10W
R430	1-216-089-00	s	METAL, CHIP 47K 5% 1/10W
R431	1-216-073-00	s	METAL, CHIP 10K 5% 1/10W
R432	1-216-089-00	s	METAL, CHIP 47K 5% 1/10W
R433	1-216-073-00	s	METAL, CHIP 10K 5% 1/10W
R434	1-216-081-00	s	METAL, CHIP 22K 5% 1/10W
R442	1-216-049-00	s	METAL, CHIP 1K 5% 1/10W
R443	1-216-067-00	s	METAL, CHIP 5.6K 5% 1/10W
R501	1-216-097-00	s	METAL, CHIP 100K 5% 1/10W
R502	1-216-057-00	s	METAL, CHIP 2.2K 5% 1/10W
R503	1-216-065-00	s	METAL, CHIP 4.7K 5% 1/10W
R504	1-216-073-00	s	METAL, CHIP 10K 5% 1/10W
R505	1-216-097-00	s	METAL, CHIP 100K 5% 1/10W
R506	1-216-025-00	s	METAL, CHIP 100 5% 1/10W
R507	1-216-057-00	s	METAL, CHIP 2.2K 5% 1/10W
R508	1-216-061-00	s	METAL, CHIP 3.3K 5% 1/10W
R509	1-216-033-00	s	METAL, CHIP 220 5% 1/10W

(SS-58A BOARD(SVO-5800P))

Ref. No. or Q'ty	Part No.	SP	Description
R510	1-216-051-00	s	METAL, CHIP 1.2K 5% 1/10W
R511	1-216-073-00	s	METAL, CHIP 10K 5% 1/10W
R512	1-216-049-00	s	METAL, CHIP 1K 5% 1/10W
R513	1-216-057-00	s	METAL, CHIP 2.2K 5% 1/10W
R514	1-216-121-00	s	METAL, CHIP 1M 5% 1/10W
R515	1-216-081-00	s	METAL, CHIP 22K 5% 1/10W
R517	1-216-073-00	s	METAL, CHIP 10K 5% 1/10W
R518	1-216-049-00	s	METAL, CHIP 1K 5% 1/10W
R519	1-216-049-00	s	METAL, CHIP 1K 5% 1/10W
R520	1-216-073-00	s	METAL, CHIP 10K 5% 1/10W
R521	1-216-073-00	s	METAL, CHIP 10K 5% 1/10W
R523	1-216-073-00	s	METAL, CHIP 10K 5% 1/10W
R524	1-216-121-00	s	METAL, CHIP 1M 5% 1/10W
R525	1-216-073-00	s	METAL, CHIP 10K 5% 1/10W
R526	1-216-696-11	s	METAL, CHIP 75K 0.5% 1/10W
R527	1-216-073-00	s	METAL, CHIP 10K 5% 1/10W
R528	1-216-057-00	s	METAL, CHIP 2.2K 5% 1/10W
R529	1-216-057-00	s	METAL, CHIP 2.2K 5% 1/10W
R530	1-216-097-00	s	METAL, CHIP 100K 5% 1/10W
R531	1-216-073-00	s	METAL, CHIP 10K 5% 1/10W
R532	1-216-073-00	s	METAL, CHIP 10K 5% 1/10W
R533	1-216-053-00	s	METAL, CHIP 1.5K 5% 1/10W
R534	1-216-081-00	s	METAL, CHIP 22K 5% 1/10W
R535	1-216-073-00	s	METAL, CHIP 10K 5% 1/10W
R536	1-216-073-00	s	METAL, CHIP 10K 5% 1/10W
R537	1-216-073-00	s	METAL, CHIP 10K 5% 1/10W
R538	1-216-073-00	s	METAL, CHIP 10K 5% 1/10W
R539	1-216-025-00	s	METAL, CHIP 100 5% 1/10W
R540	1-216-089-00	s	METAL, CHIP 47K 5% 1/10W
R541	1-216-089-00	s	METAL, CHIP 47K 5% 1/10W
R542	1-216-049-00	s	METAL, CHIP 1K 5% 1/10W
R543	1-216-089-00	s	METAL, CHIP 47K 5% 1/10W
R545	1-216-113-00	s	METAL, CHIP 470K 5% 1/10W
R546	1-216-073-00	s	METAL, CHIP 10K 5% 1/10W
R547	1-216-053-00	s	METAL, CHIP 1.5K 5% 1/10W
R548	1-216-121-00	s	METAL, CHIP 1M 5% 1/10W
R551	1-247-899-11	s	CARBON 680K 5% 1/4W
R552	1-216-067-00	s	METAL, CHIP 5.6K 5% 1/10W
R553	1-216-065-00	s	METAL, CHIP 4.7K 5% 1/10W
R554	1-216-065-00	s	METAL, CHIP 4.7K 5% 1/10W
R556	1-216-081-00	s	METAL, CHIP 22K 5% 1/10W
R557	1-216-089-00	s	METAL, CHIP 47K 5% 1/10W
R569	1-216-049-00	s	METAL, CHIP 1K 5% 1/10W
R570	1-216-049-00	s	METAL, CHIP 1K 5% 1/10W
R572	1-216-073-00	s	METAL, CHIP 10K 5% 1/10W
R573	1-216-089-00	s	METAL, CHIP 47K 5% 1/10W
R574	1-216-049-00	s	METAL, CHIP 1K 5% 1/10W
R575	1-216-089-00	s	METAL, CHIP 47K 5% 1/10W
R576	1-216-089-00	s	METAL, CHIP 47K 5% 1/10W
R577	1-216-065-00	s	METAL, CHIP 4.7K 5% 1/10W
R578	1-216-089-00	s	METAL, CHIP 47K 5% 1/10W
R579	1-216-029-00	s	METAL, CHIP 150 5% 1/10W
R580	1-216-017-00	s	METAL, CHIP 47 5% 1/10W
R581	1-216-049-00	s	METAL, CHIP 1K 5% 1/10W
R582	1-216-089-00	s	METAL, CHIP 47K 5% 1/10W
R583	1-216-073-00	s	METAL, CHIP 10K 5% 1/10W
R584	1-216-073-00	s	METAL, CHIP 10K 5% 1/10W
R585	1-216-073-00	s	METAL, CHIP 10K 5% 1/10W
R587	1-216-073-00	s	METAL, CHIP 10K 5% 1/10W

(SS-58A BOARD(SVO-5800P))

Ref. No. or Q'ty	Part No.	SP	Description
R588	1-216-073-00	s	METAL, CHIP 10K 5% 1/10W
R589	1-216-073-00	s	METAL, CHIP 10K 5% 1/10W
R590	1-216-073-00	s	METAL, CHIP 10K 5% 1/10W
R592	1-216-073-00	s	METAL, CHIP 10K 5% 1/10W
R593	1-216-073-00	s	METAL, CHIP 10K 5% 1/10W
R594	1-216-073-00	s	METAL, CHIP 10K 5% 1/10W
R595	1-216-073-00	s	METAL, CHIP 10K 5% 1/10W
R597	1-216-089-00	s	METAL, CHIP 47K 5% 1/10W
R598	1-216-037-00	s	METAL, CHIP 330 5% 1/10W
R601	1-216-073-00	s	METAL, CHIP 10K 5% 1/10W
R602	1-216-073-00	s	METAL, CHIP 10K 5% 1/10W
R604	1-216-085-00	s	METAL, CHIP 33K 5% 1/10W
R605	1-216-081-00	s	METAL, CHIP 22K 5% 1/10W
R606	1-216-025-00	s	METAL, CHIP 100 5% 1/10W
R607	1-216-081-00	s	METAL, CHIP 22K 5% 1/10W
R608	1-216-049-00	s	METAL, CHIP 1K 5% 1/10W
R609	1-216-073-00	s	METAL, CHIP 10K 5% 1/10W
R610	1-216-049-00	s	METAL, CHIP 1K 5% 1/10W
R611	1-216-041-00	s	METAL, CHIP 470 5% 1/10W
R612	1-216-049-00	s	METAL, CHIP 1K 5% 1/10W
R613	1-216-081-00	s	METAL, CHIP 22K 5% 1/10W
R614	1-216-652-11	s	METAL, CHIP 1.1K 0.5% 1/10W
R615	1-216-651-11	s	METAL, CHIP 1K 0.5% 1/10W
R616	1-216-067-00	s	METAL, CHIP 5.6K 5% 1/10W
R617	1-216-057-00	s	METAL, CHIP 2.2K 5% 1/10W
R618	1-216-073-00	s	METAL, CHIP 10K 5% 1/10W
R619	1-216-651-11	s	METAL, CHIP 1K 0.5% 1/10W
R620	1-216-659-11	s	METAL, CHIP 2.2K 0.5% 1/10W
R621	1-216-659-11	s	METAL, CHIP 2.2K 0.5% 1/10W
R622	1-216-073-00	s	METAL, CHIP 10K 5% 1/10W
R623	1-216-073-00	s	METAL, CHIP 10K 5% 1/10W
R624	1-216-073-00	s	METAL, CHIP 10K 5% 1/10W
R625	1-208-824-11	s	METAL, CHIP 56K 0.5% 1/10W
R626	1-216-665-11	s	METAL, CHIP 3.9K 0.5% 1/10W
R627	1-216-049-00	s	METAL, CHIP 1K 5% 1/10W
R628	1-216-049-00	s	METAL, CHIP 1K 5% 1/10W
R629	1-216-081-00	s	METAL, CHIP 22K 5% 1/10W
R632	1-216-049-00	s	METAL, CHIP 1K 5% 1/10W
R633	1-216-077-00	s	METAL, CHIP 15K 5% 1/10W
R635	1-208-784-11	s	METAL, CHIP 1.2K 0.50% 1/10W
R636	1-216-665-11	s	METAL, CHIP 3.9K 0.5% 1/10W
R638	1-216-073-00	s	METAL, CHIP 10K 5% 1/10W
R639	1-216-091-00	s	METAL, CHIP 56K 5% 1/10W
R640	1-216-073-00	s	METAL, CHIP 10K 5% 1/10W
R643	1-216-055-00	s	METAL, CHIP 1.8K 5% 1/10W
R644	1-216-073-00	s	METAL, CHIP 10K 5% 1/10W
R645	1-216-073-00	s	METAL, CHIP 10K 5% 1/10W
R646	1-216-057-00	s	METAL, CHIP 2.2K 5% 1/10W
R647	1-216-073-00	s	METAL, CHIP 10K 5% 1/10W
R648	1-216-073-00	s	METAL, CHIP 10K 5% 1/10W
R649	1-216-067-00	s	METAL, CHIP 5.6K 5% 1/10W
R650	1-216-109-00	s	METAL, CHIP 330K 5% 1/10W
R651	1-216-081-00	s	METAL, CHIP 22K 5% 1/10W
R652	1-216-081-00	s	METAL, CHIP 22K 5% 1/10W
R653	1-216-073-00	s	METAL, CHIP 10K 5% 1/10W
R654	1-216-105-91	s	METAL, CHIP 220K 5% 1/10W
R666	1-216-057-00	s	METAL, CHIP 2.2K 5% 1/10W
R668	1-216-081-00	s	METAL, CHIP 22K 5% 1/10W
R669	1-216-081-00	s	METAL, CHIP 22K 5% 1/10W

(SS-58A BOARD(SVO-5800P))

Ref. No. or Q'ty	Part No.	SP	Description
R670	1-218-754-11	s	METAL, CHIP 120K 0.50% 1/10W
R674	1-216-121-00	s	METAL, CHIP 1M 5% 1/10W
R680	1-216-073-00	s	METAL, CHIP 10K 5% 1/10W
R686	1-216-065-00	s	METAL, CHIP 4.7K 5% 1/10W
R687	1-216-065-00	s	METAL, CHIP 4.7K 5% 1/10W
R690	1-216-097-00	s	METAL, CHIP 100K 5% 1/10W
RB101	1-236-907-11	s	RESISTOR BLOCK, CHIP 100Kx4
RB102	1-236-907-11	s	RESISTOR BLOCK, CHIP 100Kx4
RB103	1-236-904-11	s	RESISTOR BLOCK, CHIP 1Kx4
RB104	1-239-444-11	s	RESISTOR BLOCK, CHIP 220Kx4
RB105	1-239-412-11	s	RESISTOR BLOCK, CHIP 100x4
RB106	1-236-904-11	s	RESISTOR BLOCK, CHIP 1Kx4
RB107	1-236-907-11	s	RESISTOR BLOCK, CHIP 100Kx4
RB108	1-239-412-11	s	RESISTOR BLOCK, CHIP 100x4
RB109	1-239-389-11	s	RESISTOR BLOCK, CHIP 47Kx4
RB110	1-236-908-11	s	RESISTOR BLOCK, CHIP 10Kx4
RB112	1-239-448-11	s	RESISTOR BLOCK, CHIP 470Kx4
RB113	1-236-908-11	s	RESISTOR BLOCK, CHIP 10Kx4
RB114	1-236-908-11	s	RESISTOR BLOCK, CHIP 10Kx4
RB115	1-236-908-11	s	RESISTOR BLOCK, CHIP 10Kx4
RB301	1-236-904-11	s	RESISTOR BLOCK, CHIP 1Kx4
RB302	1-236-904-11	s	RESISTOR BLOCK, CHIP 1Kx4
RB303	1-236-904-11	s	RESISTOR BLOCK, CHIP 1Kx4
RB304	1-236-904-11	s	RESISTOR BLOCK, CHIP 1Kx4
RB305	1-236-908-11	s	RESISTOR BLOCK, CHIP 10Kx4
RB306	1-236-904-11	s	RESISTOR BLOCK, CHIP 1Kx4
RB501	1-239-412-11	s	RESISTOR BLOCK, CHIP 100x4
RB502	1-239-389-11	s	RESISTOR BLOCK, CHIP 47Kx4
RB503	1-239-389-11	s	RESISTOR BLOCK, CHIP 47Kx4
RB504	1-239-389-11	s	RESISTOR BLOCK, CHIP 47Kx4
RB505	1-239-389-11	s	RESISTOR BLOCK, CHIP 47Kx4
RB506	1-239-389-11	s	RESISTOR BLOCK, CHIP 47Kx4
RB507	1-236-904-11	s	RESISTOR BLOCK, CHIP 1Kx4
RB508	1-236-904-11	s	RESISTOR BLOCK, CHIP 1Kx4
RB509	1-236-904-11	s	RESISTOR BLOCK, CHIP 1Kx4
RB510	1-236-904-11	s	RESISTOR BLOCK, CHIP 1Kx4
RB511	1-239-412-11	s	RESISTOR BLOCK, CHIP 100x4
RV301	1-238-019-11	s	RES, ADJ CARBON 47K
RV601	1-241-628-11	s	RES, ADJ CARBON 2.2K
S101	1-570-623-11	s	SWITCH, DIP 8-CKT
X101	1-760-465-11	s	CRYSTAL 16.00MHz
X501	1-760-429-11	s	CRYSTAL 14.50MHz
X502	1-760-337-21	s	CRYSTAL 12.00MHz
X503	1-760-464-11	s	CRYSTAL 4.9152MHz
X504	1-579-125-11	s	CERAMIC 8.00MHz
X601	1-577-082-11	s	CERAMIC 4.00MHz
X602	1-567-504-95	s	CRYSTAL 4.433619MHz

SS-58C BOARD(SVP-5600P)

Ref. No. or Q'ty	Part No.	SP	Description

SS-58C board is used for SVP-5600P(EK).

1pc	A-8265-881-A	o	MOUNTED CIRCUIT BOARD, SS-58C
1pc	3-179-084-01	s	LEVER (R), PC BOARD
1pc	3-179-085-01	s	LEVER (L), PC BOARD
C101	1-163-037-11	s	CERAMIC, CHIP 0.022uF 10% 25V
C102	1-124-126-00	s	ELECT 47uF 20% 25V
C103	1-163-037-11	s	CERAMIC, CHIP 0.022uF 10% 25V
C104	1-163-037-11	s	CERAMIC, CHIP 0.022uF 10% 25V
C106	1-163-275-11	s	CERAMIC, CHIP 0.001uF 5% 50V
C107	1-163-275-11	s	CERAMIC, CHIP 0.001uF 5% 50V
C108	1-163-809-11	s	CERAMIC, CHIP 0.047uF 10% 25V
C111	1-126-964-11	s	ELECT 10uF 20% 50V
C112	1-163-275-11	s	CERAMIC, CHIP 0.001uF 5% 50V
C113	1-164-232-11	s	CERAMIC, CHIP 0.01uF 10% 100V
C114	1-163-275-11	s	CERAMIC, CHIP 0.001uF 5% 50V
C115	1-163-133-00	s	CERAMIC, CHIP 470PF 5% 50V
C116	1-164-232-11	s	CERAMIC, CHIP 0.01uF 10% 100V
C117	1-163-275-11	s	CERAMIC, CHIP 0.001uF 5% 50V
C118	1-163-037-11	s	CERAMIC, CHIP 0.022uF 10% 25V
C120	1-126-966-11	s	ELECT 33uF 20% 50V
C121	1-163-097-00	s	CERAMIC, CHIP 15PF 5% 50V
C122	1-163-097-00	s	CERAMIC, CHIP 15PF 5% 50V
C123	1-124-126-00	s	ELECT 47uF 20% 25V
C124	1-124-126-00	s	ELECT 47uF 20% 25V
C125	1-124-126-00	s	ELECT 47uF 20% 25V
C126	1-124-916-11	s	ELECT 22uF 20% 63V
C127	1-163-037-11	s	CERAMIC, CHIP 0.022uF 10% 25V
C128	1-124-925-11	s	ELECT 2.2uF 20% 100V
C129	1-163-037-11	s	CERAMIC, CHIP 0.022uF 10% 25V
C302	1-163-145-00	s	CERAMIC, CHIP 0.0015uF 5% 50V
C303	1-163-263-11	s	CERAMIC, CHIP 330PF 5% 50V
C304	1-164-699-11	s	CERAMIC, CHIP 0.0033uF 5% 50V
C305	1-163-275-11	s	CERAMIC, CHIP 0.001uF 5% 50V
C306	1-163-275-11	s	CERAMIC, CHIP 0.001uF 5% 50V
C307	1-164-695-11	s	CERAMIC 0.0022uF 5% 50V
C308	1-163-275-11	s	CERAMIC, CHIP 0.001uF 5% 50V
C309	1-163-263-11	s	CERAMIC, CHIP 330PF 5% 50V
C315	1-163-016-00	s	CERAMIC CHIP 0.0039MF 10% 50V
C316	1-163-016-00	s	CERAMIC CHIP 0.0039MF 10% 50V
C318	1-124-916-11	s	ELECT 22uF 20% 63V
C319	1-163-037-11	s	CERAMIC, CHIP 0.022uF 10% 25V
C320	1-124-126-00	s	ELECT 47uF 20% 25V
C323	1-124-916-11	s	ELECT 22uF 20% 63V
C324	1-124-902-00	s	ELECT 0.47uF 20% 50V
C326-332	1-163-037-11	s	CERAMIC, CHIP 0.022uF 10% 25V
C401	1-124-916-11	s	ELECT 22uF 20% 63V
C402	1-163-037-11	s	CERAMIC, CHIP 0.022uF 10% 25V
C403	1-124-916-11	s	ELECT 22uF 20% 63V
C404	1-163-275-11	s	CERAMIC, CHIP 0.001uF 5% 50V
C405	1-163-251-11	s	CERAMIC, CHIP 100PF 5% 50V
C406	1-163-019-00	s	CERAMIC, CHIP 0.0068uF 10% 50V
C407	1-163-113-00	s	CERAMIC, CHIP 68PF 5% 50V
C408	1-164-232-11	s	CERAMIC, CHIP 0.01uF 10% 100V
C409	1-124-916-11	s	ELECT 22uF 20% 63V
C410	1-124-916-11	s	ELECT 22uF 20% 63V
C411	1-163-017-00	s	CERAMIC, CHIP 0.0047uF 5% 50V
C412	1-164-232-11	s	CERAMIC, CHIP 0.01uF 10% 100V
C413	1-126-964-11	s	ELECT 10uF 20% 50V

(SS-58C BOARD(SVP-5600P))

Ref. No. or Q'ty	Part No.	SP	Description
C418	1-163-037-11	s	CERAMIC, CHIP 0.022uF 10% 25V
C419	1-163-037-11	s	CERAMIC, CHIP 0.022uF 10% 25V
C501	1-124-126-00	s	ELECT 47uF 20% 25V
C502	1-124-126-00	s	ELECT 47uF 20% 25V
C503	1-124-126-00	s	ELECT 47uF 20% 25V
C504	1-164-695-11	s	CERAMIC 0.0022uF 5% 50V
C505	1-163-037-11	s	CERAMIC, CHIP 0.022uF 10% 25V
C506	1-163-235-11	s	CERAMIC, CHIP 22PF 5% 50V
C507	1-163-037-11	s	CERAMIC, CHIP 0.022uF 10% 25V
C508	1-124-126-00	s	ELECT 47uF 20% 25V
C509	1-164-232-11	s	CERAMIC, CHIP 0.01uF 10% 100V
C510	1-124-126-00	s	ELECT 47uF 20% 25V
C511	1-126-964-11	s	ELECT 10uF 20% 50V
C512	1-124-126-00	s	ELECT 47uF 20% 25V
C513	1-163-037-11	s	CERAMIC, CHIP 0.022uF 10% 25V
C515	1-124-916-11	s	ELECT 22uF 20% 63V
C517	1-163-241-11	s	CERAMIC, CHIP 39PF 5% 50V
C518	1-163-239-11	s	CERAMIC, CHIP 33PF 5% 50V
C519	1-164-232-11	s	CERAMIC, CHIP 0.01uF 10% 100V
C520	1-164-695-11	s	CERAMIC 0.0022uF 5% 50V
C521	1-163-235-11	s	CERAMIC, CHIP 22PF 5% 50V
C522	1-163-235-11	s	CERAMIC, CHIP 22PF 5% 50V
C523	1-163-145-00	s	CERAMIC, CHIP 0.0015uF 5% 50V
C524	1-124-903-11	s	ELECT 1uF 20% 50V
C525	1-163-251-11	s	CERAMIC, CHIP 100PF 5% 50V
C529	1-124-916-11	s	ELECT 22uF 20% 63V
C530	1-164-232-11	s	CERAMIC, CHIP 0.01uF 10% 100V
C531	1-124-126-00	s	ELECT 47uF 20% 25V
C532	1-124-126-00	s	ELECT 47uF 20% 25V
C533	1-124-126-00	s	ELECT 47uF 20% 25V
C534	1-164-232-11	s	CERAMIC, CHIP 0.01uF 10% 100V
C535	1-124-902-00	s	ELECT 0.47uF 20% 50V
C536	1-124-126-00	s	ELECT 47uF 20% 25V
C537	1-164-232-11	s	CERAMIC, CHIP 0.01uF 10% 100V
C538	1-163-133-00	s	CERAMIC, CHIP 470PF 5% 50V
C539	1-163-133-00	s	CERAMIC, CHIP 470PF 5% 50V
C540	1-163-235-11	s	CERAMIC, CHIP 22PF 5% 50V
C541	1-163-235-11	s	CERAMIC, CHIP 22PF 5% 50V
C543	1-163-037-11	s	CERAMIC, CHIP 0.022uF 10% 25V
C544	1-124-126-00	s	ELECT 47uF 20% 25V
C545	1-163-133-00	s	CERAMIC, CHIP 470PF 5% 50V
C546	1-163-137-00	s	CERAMIC, CHIP 680PF 5% 50V
C547	1-163-125-00	s	CERAMIC, CHIP 220PF 5% 50V
C548	1-163-037-11	s	CERAMIC, CHIP 0.022uF 10% 25V
C549	1-163-037-11	s	CERAMIC, CHIP 0.022uF 10% 25V
C550	1-163-037-11	s	CERAMIC, CHIP 0.022uF 10% 25V
C551	1-163-037-11	s	CERAMIC, CHIP 0.022uF 10% 25V
C552	1-163-809-11	s	CERAMIC, CHIP 0.047uF 10% 25V
C553	1-163-037-11	s	CERAMIC, CHIP 0.022uF 10% 25V
C602	1-163-037-11	s	CERAMIC, CHIP 0.022uF 10% 25V
C603	1-163-037-11	s	CERAMIC, CHIP 0.022uF 10% 25V
C604	1-163-037-11	s	CERAMIC, CHIP 0.022uF 10% 25V
C606	1-162-207-31	s	CERAMIC 22PF 5% 50V
C607	1-126-933-11	s	ELECT 100uF 20% 16V
C608	1-164-232-11	s	CERAMIC, CHIP 0.01uF 10% 100V
C609	1-164-232-11	s	CERAMIC, CHIP 0.01uF 10% 100V
C610	1-164-232-11	s	CERAMIC, CHIP 0.01uF 10% 100V
C611	1-163-229-11	s	CERAMIC, CHIP 12PF 5% 50V
C612	1-164-232-11	s	CERAMIC, CHIP 0.01uF 10% 100V

(SS-58C BOARD(SVP-5600P))

Ref. No. or Q'ty	Part No.	SP	Description
C613	1-126-933-11	s	ELECT 100uF 20% 16V
C614	1-164-004-11	s	CERAMIC, CHIP 0.1uF 10% 25V
C615	1-163-253-11	s	CERAMIC, CHIP 120PF 5% 50V
C616	1-163-257-11	s	CERAMIC, CHIP 180PF 5% 50V
C617	1-163-809-11	s	CERAMIC, CHIP 0.047uF 10% 25V
C618	1-164-232-11	s	CERAMIC, CHIP 0.01uF 10% 100V
C619	1-164-232-11	s	CERAMIC, CHIP 0.01uF 10% 100V
C620	1-164-232-11	s	CERAMIC, CHIP 0.01uF 10% 100V
C621	1-164-232-11	s	CERAMIC, CHIP 0.01uF 10% 100V
C622	1-164-232-11	s	CERAMIC, CHIP 0.01uF 10% 100V
C623	1-164-232-11	s	CERAMIC, CHIP 0.01uF 10% 100V
C624	1-164-232-11	s	CERAMIC, CHIP 0.01uF 10% 100V
C625	1-164-232-11	s	CERAMIC, CHIP 0.01uF 10% 100V
C626	1-164-232-11	s	CERAMIC, CHIP 0.01uF 10% 100V
C627	1-164-232-11	s	CERAMIC, CHIP 0.01uF 10% 100V
C628	1-164-489-11	s	CERAMIC, CHIP 0.22uF 10% 16V
C629	1-164-004-11	s	CERAMIC, CHIP 0.1uF 10% 25V
C630	1-163-229-11	s	CERAMIC, CHIP 12PF 5% 50V
C631	1-164-232-11	s	CERAMIC, CHIP 0.01uF 10% 100V
C632	1-164-232-11	s	CERAMIC, CHIP 0.01uF 10% 100V
C633	1-164-232-11	s	CERAMIC, CHIP 0.01uF 10% 100V
C634	1-163-257-11	s	CERAMIC, CHIP 180PF 5% 50V
C635	1-164-232-11	s	CERAMIC, CHIP 0.01uF 10% 100V
C636	1-163-133-00	s	CERAMIC, CHIP 470PF 5% 50V
C637	1-164-004-11	s	CERAMIC, CHIP 0.1uF 10% 25V
C638	1-126-964-11	s	ELECT 10uF 20% 50V
C639	1-163-037-11	s	CERAMIC, CHIP 0.022uF 10% 25V
C640	1-164-232-11	s	CERAMIC, CHIP 0.01uF 10% 100V
C641	1-163-275-11	s	CERAMIC, CHIP 0.001uF 5% 50V
C642	1-164-004-11	s	CERAMIC, CHIP 0.1uF 10% 25V
C643	1-163-227-11	s	CERAMIC, CHIP 10PF 5% 50V
C644	1-163-222-11	s	CERAMIC, CHIP 5PF 50V
C645	1-163-243-11	s	CERAMIC, CHIP 47PF 5% 50V
C646	1-163-275-11	s	CERAMIC, CHIP 0.001uF 5% 50V
C647	1-124-126-00	s	ELECT 47uF 20% 25V
C649	1-126-933-11	s	ELECT 100uF 20% 16V
C650	1-164-232-11	s	CERAMIC, CHIP 0.01uF 10% 100V
C651	1-124-925-11	s	ELECT 2.2uF 20% 100V
C652	1-164-232-11	s	CERAMIC, CHIP 0.01uF 10% 100V
C653	1-164-232-11	s	CERAMIC, CHIP 0.01uF 10% 100V
C654	1-163-251-11	s	CERAMIC, CHIP 100PF 5% 50V
C655	1-124-927-11	s	ELECT 4.7uF 20% 100V
C656	1-124-903-11	s	ELECT 1uF 20% 50V
C657	1-164-004-11	s	CERAMIC, CHIP 0.1uF 10% 25V
C659	1-163-125-00	s	CERAMIC, CHIP 220PF 5% 50V
C660	1-163-809-11	s	CERAMIC, CHIP 0.047uF 10% 25V
C661	1-124-925-11	s	ELECT 2.2uF 20% 100V
C667	1-163-125-00	s	CERAMIC, CHIP 220PF 5% 50V
C668	1-164-344-11	s	CERAMIC, CHIP 0.068uF 10% 25V
C669	1-164-004-11	s	CERAMIC, CHIP 0.1uF 10% 25V
C670	1-126-933-11	s	ELECT 100uF 20% 16V
C673	1-126-933-11	s	ELECT 100uF 20% 16V
C674	1-164-004-11	s	CERAMIC, CHIP 0.1uF 10% 25V
C675	1-163-037-11	s	CERAMIC, CHIP 0.022uF 10% 25V
C676	1-163-037-11	s	CERAMIC, CHIP 0.022uF 10% 25V
CN301	1-766-793-11	o	CONNECTOR, DIN 64P, MALE
CN302	1-766-793-11	o	CONNECTOR, DIN 64P, MALE
CN303	1-766-793-11	o	CONNECTOR, DIN 64P, MALE
CN310	1-564-002-11	s	CONNECTOR 3P, MALE

(SS-58C BOARD(SVP-5600P))

Ref. No. or Q'ty	Part No.	SP	Description
D103	8-719-938-75	s	DIODE SB05-05CP
D301	8-719-104-34	s	DIODE 1S2835
D303	8-719-104-34	s	DIODE 1S2835
D401	8-719-157-36	s	DIODE RD6.8M-B
D402	8-719-104-34	s	DIODE 1S2835
D502	8-719-800-76	s	DIODE 1SS226
D503	8-719-157-33	s	DIODE RD6.2M-T1B
D505	8-719-800-76	s	DIODE 1SS226
IC101	8-752-853-69	s	IC CXP87132-030Q
IC102	8-759-700-07	s	IC NJM2903M
IC103	8-759-100-96	s	IC UPC4558G2
IC104	8-759-512-71	s	IC S-8054HNM
IC105	8-759-745-64	s	IC NJM4560M
IC301	8-759-700-07	s	IC NJM2903M
IC302	8-759-009-51	s	IC MC14538BF
IC303	8-759-008-86	s	IC MC14017BF-T2
IC304	8-759-009-51	s	IC MC14538BF
IC305	8-759-008-82	s	IC MC14013BF
IC308	8-743-915-10	s	IC BX3915A
IC309	8-759-300-71	s	IC HD14053BFP
IC310	8-759-009-51	s	IC MC14538BF
IC401	8-759-300-71	s	IC HD14053BFP
IC402	8-759-711-82	s	IC NJM4580E(T2)
IC403	8-759-700-07	s	IC NJM2903M
IC501	8-759-100-96	s	IC UPC4558G2
IC502	8-759-700-07	s	IC NJM2903M
IC503	8-759-711-32	s	IC NJM2245M
IC504	8-759-912-64	s	IC PA0009
IC505	8-759-925-80	s	IC SN74HC14ANS
IC506	8-759-925-74	s	IC TC74HC04ANS
IC507	8-759-300-71	s	IC HD14053BFP
IC508	8-759-300-71	s	IC HD14053BFP
IC509	8-759-009-51	s	IC MC14538BF
IC510	8-759-009-02	s	IC MC14046BF
IC511	8-759-925-76	s	IC SN74HC08ANS
IC512	8-759-300-71	s	IC HD14053BFP
IC513	8-759-009-11	s	IC MC14070BF
IC514	8-759-925-76	s	IC SN74HC08ANS
IC516	8-759-146-73	s	IC CXD8042Q-502
IC517	8-759-944-79	s	IC CXD1132Q
IC518	8-759-332-36	s	IC UPD78056GC-045-3B9
IC519	8-759-061-67	s	IC MC34051M
IC520	8-759-100-96	s	IC UPC4558G2
IC521	8-759-095-42	s	IC CXD8343AP
IC601	8-759-710-86	s	IC NJM2233BM-T1
IC602	8-759-710-86	s	IC NJM2233BM-T1
IC603	8-759-634-93	s	IC M52059AFP
IC604	8-759-925-74	s	IC TC74HC04ANS
IC605	8-759-076-46	s	IC CXD8371M
IC606	8-759-009-51	s	IC MC14538BF
IC608	8-759-908-17	s	IC TL082CPS
L101	1-410-645-31	s	INDUCTOR 100uH
L302	1-410-645-31	s	INDUCTOR 100uH
L401	1-410-645-31	s	INDUCTOR 100uH
L501	1-410-645-31	s	INDUCTOR 100uH
L503	1-410-645-31	s	INDUCTOR 100uH
L602	1-410-645-31	s	INDUCTOR 100uH

(SS-58C BOARD(SVP-5600P))

Ref. No. or Q'ty	Part No.	SP	Description
L603	1-410-645-31	s	INDUCTOR 100uH
L604	1-410-473-11	s	INDUCTOR 18uH
L605	1-410-468-11	s	INDUCTOR 6.8uH
L606	1-410-645-31	s	INDUCTOR 100uH
L607	1-410-468-11	s	INDUCTOR 6.8uH
L609	1-410-478-11	s	INDUCTOR 47uH
L610	1-410-645-31	s	INDUCTOR 100uH
L612	1-410-645-31	s	INDUCTOR 100uH
Q103	8-729-216-22	s	TRANSISTOR 2SA1162
Q104	8-729-230-49	s	TRANSISTOR 2SC2712-YG
Q105	8-729-901-01	s	TRANSISTOR DTC144EK
Q106	8-729-119-77	s	TRANSISTOR 2SA1175-FEK
Q107	8-729-230-49	s	TRANSISTOR 2SC2712-YG
Q108	8-729-230-49	s	TRANSISTOR 2SC2712-YG
Q109	8-729-230-49	s	TRANSISTOR 2SC2712-YG
Q306	8-729-230-49	s	TRANSISTOR 2SC2712-YG
Q309	8-729-901-05	s	TRANSISTOR DTA124EK
Q401	8-729-230-49	s	TRANSISTOR 2SC2712-YG
Q402	8-729-230-49	s	TRANSISTOR 2SC2712-YG
Q503	8-729-901-01	s	TRANSISTOR DTC144EK
Q504	8-729-901-01	s	TRANSISTOR DTC144EK
Q505	8-729-230-49	s	TRANSISTOR 2SC2712-YG
Q506	8-729-230-49	s	TRANSISTOR 2SC2712-YG
Q507	8-729-230-49	s	TRANSISTOR 2SC2712-YG
Q601	8-729-230-49	s	TRANSISTOR 2SC2712-YG
Q602	8-729-901-01	s	TRANSISTOR DTC144EK
Q603	8-729-230-49	s	TRANSISTOR 2SC2712-YG
Q605	8-729-230-49	s	TRANSISTOR 2SC2712-YG
Q607	8-729-230-49	s	TRANSISTOR 2SC2712-YG
Q608	8-729-230-49	s	TRANSISTOR 2SC2712-YG
Q610	8-729-230-49	s	TRANSISTOR 2SC2712-YG
Q611	8-729-901-01	s	TRANSISTOR DTC144EK
Q612	8-729-230-49	s	TRANSISTOR 2SC2712-YG
R101	1-216-089-00	s	METAL, CHIP 47K 5% 1/10W
R102	1-216-089-00	s	METAL, CHIP 47K 5% 1/10W
R103	1-216-089-00	s	METAL, CHIP 47K 5% 1/10W
R110	1-216-073-00	s	METAL, CHIP 10K 5% 1/10W
R111	1-216-073-00	s	METAL, CHIP 10K 5% 1/10W
R112	1-208-817-11	s	METAL, CHIP 30K 0.50% 1/10W
R113	1-216-063-00	s	METAL, CHIP 3.9K 5% 1/10W
R114	1-216-065-00	s	METAL, CHIP 4.7K 5% 1/10W
R115	1-216-648-11	s	METAL, CHIP 750 0.5% 1/10W
R116	1-216-097-00	s	METAL, CHIP 100K 5% 1/10W
R118	1-216-073-00	s	METAL, CHIP 10K 5% 1/10W
R119	1-216-109-00	s	METAL, CHIP 330K 5% 1/10W
R129	1-216-121-00	s	METAL, CHIP 1M 5% 1/10W
R130	1-216-081-00	s	METAL, CHIP 22K 5% 1/10W
R131	1-216-105-91	s	METAL, CHIP 220K 5% 1/10W
R132	1-216-073-00	s	METAL, CHIP 10K 5% 1/10W
R133	1-216-049-00	s	METAL, CHIP 1K 5% 1/10W
R134	1-216-049-00	s	METAL, CHIP 1K 5% 1/10W
R135	1-216-691-11	s	METAL, CHIP 47K 0.5% 1/10W
R136	1-216-694-11	s	METAL, CHIP 62K 0.5% 1/10W
R137	1-216-049-00	s	METAL, CHIP 1K 5% 1/10W
R138	1-216-065-00	s	METAL, CHIP 4.7K 5% 1/10W
R139	1-216-073-00	s	METAL, CHIP 10K 5% 1/10W
R140	1-216-065-00	s	METAL, CHIP 4.7K 5% 1/10W
R141	1-216-089-00	s	METAL, CHIP 47K 5% 1/10W

(SS-58C BOARD(SVP-5600P))

Ref. No. or Q'ty	Part No.	SP	Description
R142	1-216-121-00	s	METAL, CHIP 1M 5% 1/10W
R143	1-216-081-00	s	METAL, CHIP 22K 5% 1/10W
R144	1-216-105-91	s	METAL, CHIP 220K 5% 1/10W
R145	1-216-073-00	s	METAL, CHIP 10K 5% 1/10W
R146	1-216-049-00	s	METAL, CHIP 1K 5% 1/10W
R149	1-216-089-00	s	METAL, CHIP 47K 5% 1/10W
R150	1-216-049-00	s	METAL, CHIP 1K 5% 1/10W
R151	1-216-065-00	s	METAL, CHIP 4.7K 5% 1/10W
R152	1-216-065-00	s	METAL, CHIP 4.7K 5% 1/10W
R153	1-216-049-00	s	METAL, CHIP 1K 5% 1/10W
R154	1-216-049-00	s	METAL, CHIP 1K 5% 1/10W
R155	1-216-105-91	s	METAL, CHIP 220K 5% 1/10W
R156	1-216-049-00	s	METAL, CHIP 1K 5% 1/10W
R157	1-216-081-00	s	METAL, CHIP 22K 5% 1/10W
R162	1-216-081-00	s	METAL, CHIP 22K 5% 1/10W
R163	1-216-081-00	s	METAL, CHIP 22K 5% 1/10W
R175	1-216-049-00	s	METAL, CHIP 1K 5% 1/10W
R176	1-216-065-00	s	METAL, CHIP 4.7K 5% 1/10W
R301	1-216-073-00	s	METAL, CHIP 10K 5% 1/10W
R303	1-216-097-00	s	METAL, CHIP 100K 5% 1/10W
R304	1-216-097-00	s	METAL, CHIP 100K 5% 1/10W
R305	1-216-073-00	s	METAL, CHIP 10K 5% 1/10W
R306	1-216-073-00	s	METAL, CHIP 10K 5% 1/10W
R309	1-216-073-00	s	METAL, CHIP 10K 5% 1/10W
R310	1-216-049-00	s	METAL, CHIP 1K 5% 1/10W
R311	1-216-049-00	s	METAL, CHIP 1K 5% 1/10W
R312	1-216-073-00	s	METAL, CHIP 10K 5% 1/10W
R320	1-208-824-11	s	METAL, CHIP 56K 0.5% 1/10W
R321	1-216-065-00	s	METAL, CHIP 4.7K 5% 1/10W
R322	1-208-800-11	s	METAL, CHIP 5.6K 0.5% 1/10W
R323	1-216-073-00	s	METAL, CHIP 10K 5% 1/10W
R326	1-216-081-00	s	METAL, CHIP 22K 5% 1/10W
R327	1-216-697-91	s	METAL, CHIP 82K 0.5% 1/10W
R329	1-216-081-00	s	METAL, CHIP 22K 5% 1/10W
R330	1-216-685-11	s	METAL, CHIP 27K 0.5% 1/10W
R331	1-216-690-11	s	METAL, CHIP 43K 0.5% 1/10W
R333	1-216-691-11	s	METAL, CHIP 47K 0.5% 1/10W
R334	1-216-073-00	s	METAL, CHIP 10K 5% 1/10W
R335	1-216-097-00	s	METAL, CHIP 100K 5% 1/10W
R345	1-216-073-00	s	METAL, CHIP 10K 5% 1/10W
R347	1-216-117-00	s	METAL, CHIP 680K 5% 1/10W
R348	1-216-117-00	s	METAL, CHIP 680K 5% 1/10W
R350	1-216-051-00	s	METAL, CHIP 1.2K 5% 1/10W
R351	1-216-650-11	s	METAL, CHIP 910 0.5% 1/10W
R352	1-216-049-00	s	METAL, CHIP 1K 5% 1/10W
R355	1-216-097-00	s	METAL, CHIP 100K 5% 1/10W
R401	1-216-065-00	s	METAL, CHIP 4.7K 5% 1/10W
R402	1-216-073-00	s	METAL, CHIP 10K 5% 1/10W
R403	1-216-073-00	s	METAL, CHIP 10K 5% 1/10W
R404	1-216-073-00	s	METAL, CHIP 10K 5% 1/10W
R405	1-216-065-00	s	METAL, CHIP 4.7K 5% 1/10W
R406	1-216-065-00	s	METAL, CHIP 4.7K 5% 1/10W
R407	1-216-699-11	s	METAL, CHIP 100K 0.5% 1/10W
R408	1-216-121-00	s	METAL, CHIP 1M 5% 1/10W
R409	1-216-081-00	s	METAL, CHIP 22K 5% 1/10W
R410	1-216-121-00	s	METAL, CHIP 1M 5% 1/10W
R411	1-216-097-00	s	METAL, CHIP 100K 5% 1/10W
R412	1-216-057-00	s	METAL, CHIP 2.2K 5% 1/10W
R413	1-216-039-00	s	METAL, CHIP 390 5% 1/10W

(SS-58C BOARD(SVP-5600P))

Ref. No. or Q'ty	Part No.	SP	Description
R414	1-216-073-00	s	METAL, CHIP 10K 5% 1/10W
R415	1-216-065-00	s	METAL, CHIP 4.7K 5% 1/10W
R416	1-216-073-00	s	METAL, CHIP 10K 5% 1/10W
R417	1-216-073-00	s	METAL, CHIP 10K 5% 1/10W
R418	1-216-089-00	s	METAL, CHIP 47K 5% 1/10W
R419	1-216-089-00	s	METAL, CHIP 47K 5% 1/10W
R420	1-216-073-00	s	METAL, CHIP 10K 5% 1/10W
R421	1-216-073-00	s	METAL, CHIP 10K 5% 1/10W
R422	1-216-113-00	s	METAL, CHIP 470K 5% 1/10W
R425	1-216-073-00	s	METAL, CHIP 10K 5% 1/10W
R442	1-216-049-00	s	METAL, CHIP 1K 5% 1/10W
R443	1-216-067-00	s	METAL, CHIP 5.6K 5% 1/10W
R501	1-216-097-00	s	METAL, CHIP 100K 5% 1/10W
R502	1-216-057-00	s	METAL, CHIP 2.2K 5% 1/10W
R503	1-216-065-00	s	METAL, CHIP 4.7K 5% 1/10W
R504	1-216-073-00	s	METAL, CHIP 10K 5% 1/10W
R505	1-216-097-00	s	METAL, CHIP 100K 5% 1/10W
R506	1-216-025-00	s	METAL, CHIP 100 5% 1/10W
R507	1-216-057-00	s	METAL, CHIP 2.2K 5% 1/10W
R508	1-216-061-00	s	METAL, CHIP 3.3K 5% 1/10W
R509	1-216-033-00	s	METAL, CHIP 220 5% 1/10W
R510	1-216-051-00	s	METAL, CHIP 1.2K 5% 1/10W
R511	1-216-073-00	s	METAL, CHIP 10K 5% 1/10W
R512	1-216-049-00	s	METAL, CHIP 1K 5% 1/10W
R513	1-216-057-00	s	METAL, CHIP 2.2K 5% 1/10W
R514	1-216-121-00	s	METAL, CHIP 1M 5% 1/10W
R515	1-216-081-00	s	METAL, CHIP 22K 5% 1/10W
R517	1-216-073-00	s	METAL, CHIP 10K 5% 1/10W
R518	1-216-049-00	s	METAL, CHIP 1K 5% 1/10W
R519	1-216-049-00	s	METAL, CHIP 1K 5% 1/10W
R520	1-216-073-00	s	METAL, CHIP 10K 5% 1/10W
R521	1-216-073-00	s	METAL, CHIP 10K 5% 1/10W
R523	1-216-073-00	s	METAL, CHIP 10K 5% 1/10W
R524	1-216-121-00	s	METAL, CHIP 1M 5% 1/10W
R525	1-216-073-00	s	METAL, CHIP 10K 5% 1/10W
R526	1-216-696-11	s	METAL, CHIP 75K 0.5% 1/10W
R527	1-216-073-00	s	METAL, CHIP 10K 5% 1/10W
R528	1-216-057-00	s	METAL, CHIP 2.2K 5% 1/10W
R529	1-216-057-00	s	METAL, CHIP 2.2K 5% 1/10W
R530	1-216-097-00	s	METAL, CHIP 100K 5% 1/10W
R531	1-216-073-00	s	METAL, CHIP 10K 5% 1/10W
R532	1-216-073-00	s	METAL, CHIP 10K 5% 1/10W
R533	1-216-053-00	s	METAL, CHIP 1.5K 5% 1/10W
R534	1-216-081-00	s	METAL, CHIP 22K 5% 1/10W
R535	1-216-073-00	s	METAL, CHIP 10K 5% 1/10W
R536	1-216-073-00	s	METAL, CHIP 10K 5% 1/10W
R538	1-216-073-00	s	METAL, CHIP 10K 5% 1/10W
R539	1-216-025-00	s	METAL, CHIP 100 5% 1/10W
R540	1-216-089-00	s	METAL, CHIP 47K 5% 1/10W
R541	1-216-089-00	s	METAL, CHIP 47K 5% 1/10W
R545	1-216-113-00	s	METAL, CHIP 470K 5% 1/10W
R546	1-216-073-00	s	METAL, CHIP 10K 5% 1/10W
R547	1-216-053-00	s	METAL, CHIP 1.5K 5% 1/10W
R548	1-216-121-00	s	METAL, CHIP 1M 5% 1/10W
R551	1-247-899-11	s	CARBON 680K 5% 1/4W
R552	1-216-067-00	s	METAL, CHIP 5.6K 5% 1/10W
R553	1-216-065-00	s	METAL, CHIP 4.7K 5% 1/10W
R554	1-216-065-00	s	METAL, CHIP 4.7K 5% 1/10W
R556	1-216-081-00	s	METAL, CHIP 22K 5% 1/10W

(SS-58C BOARD(SVP-5600P))

Ref. No. or Q'ty	Part No.	SP	Description
R557	1-216-089-00	s	METAL, CHIP 47K 5% 1/10W
R569	1-216-049-00	s	METAL, CHIP 1K 5% 1/10W
R570	1-216-049-00	s	METAL, CHIP 1K 5% 1/10W
R572	1-216-073-00	s	METAL, CHIP 10K 5% 1/10W
R573	1-216-089-00	s	METAL, CHIP 47K 5% 1/10W
R574	1-216-049-00	s	METAL, CHIP 1K 5% 1/10W
R575	1-216-089-00	s	METAL, CHIP 47K 5% 1/10W
R576	1-216-089-00	s	METAL, CHIP 47K 5% 1/10W
R577	1-216-065-00	s	METAL, CHIP 4.7K 5% 1/10W
R578	1-216-089-00	s	METAL, CHIP 47K 5% 1/10W
R579	1-216-029-00	s	METAL, CHIP 150 5% 1/10W
R580	1-216-017-00	s	METAL, CHIP 47 5% 1/10W
R581	1-216-049-00	s	METAL, CHIP 1K 5% 1/10W
R582	1-216-089-00	s	METAL, CHIP 47K 5% 1/10W
R597	1-216-089-00	s	METAL, CHIP 47K 5% 1/10W
R598	1-216-037-00	s	METAL, CHIP 330 5% 1/10W
R601	1-216-073-00	s	METAL, CHIP 10K 5% 1/10W
R602	1-216-073-00	s	METAL, CHIP 10K 5% 1/10W
R604	1-216-085-00	s	METAL, CHIP 33K 5% 1/10W
R605	1-216-081-00	s	METAL, CHIP 22K 5% 1/10W
R606	1-216-025-00	s	METAL, CHIP 100 5% 1/10W
R607	1-216-081-00	s	METAL, CHIP 22K 5% 1/10W
R608	1-216-049-00	s	METAL, CHIP 1K 5% 1/10W
R609	1-216-073-00	s	METAL, CHIP 10K 5% 1/10W
R610	1-216-049-00	s	METAL, CHIP 1K 5% 1/10W
R611	1-216-041-00	s	METAL, CHIP 470 5% 1/10W
R612	1-216-049-00	s	METAL, CHIP 1K 5% 1/10W
R613	1-216-081-00	s	METAL, CHIP 22K 5% 1/10W
R614	1-216-652-11	s	METAL, CHIP 1.1K 0.5% 1/10W
R615	1-216-651-11	s	METAL, CHIP 1K 0.5% 1/10W
R616	1-216-067-00	s	METAL, CHIP 5.6K 5% 1/10W
R617	1-216-057-00	s	METAL, CHIP 2.2K 5% 1/10W
R618	1-216-073-00	s	METAL, CHIP 10K 5% 1/10W
R619	1-216-651-11	s	METAL, CHIP 1K 0.5% 1/10W
R620	1-216-659-11	s	METAL, CHIP 2.2K 0.5% 1/10W
R621	1-216-659-11	s	METAL, CHIP 2.2K 0.5% 1/10W
R622	1-216-073-00	s	METAL, CHIP 10K 5% 1/10W
R623	1-216-073-00	s	METAL, CHIP 10K 5% 1/10W
R624	1-216-073-00	s	METAL, CHIP 10K 5% 1/10W
R625	1-208-824-11	s	METAL, CHIP 56K 0.5% 1/10W
R626	1-216-665-11	s	METAL, CHIP 3.9K 0.5% 1/10W
R627	1-216-049-00	s	METAL, CHIP 1K 5% 1/10W
R628	1-216-049-00	s	METAL, CHIP 1K 5% 1/10W
R629	1-216-081-00	s	METAL, CHIP 22K 5% 1/10W
R632	1-216-049-00	s	METAL, CHIP 1K 5% 1/10W
R633	1-216-077-00	s	METAL, CHIP 15K 5% 1/10W
R635	1-208-784-11	s	METAL, CHIP 1.2K 0.50% 1/10W
R636	1-216-665-11	s	METAL, CHIP 3.9K 0.5% 1/10W
R638	1-216-073-00	s	METAL, CHIP 10K 5% 1/10W
R639	1-216-091-00	s	METAL, CHIP 56K 5% 1/10W
R640	1-216-073-00	s	METAL, CHIP 10K 5% 1/10W
R643	1-216-055-00	s	METAL, CHIP 1.8K 5% 1/10W
R644	1-216-073-00	s	METAL, CHIP 10K 5% 1/10W
R645	1-216-073-00	s	METAL, CHIP 10K 5% 1/10W
R646	1-216-057-00	s	METAL, CHIP 2.2K 5% 1/10W
R647	1-216-073-00	s	METAL, CHIP 10K 5% 1/10W
R648	1-216-073-00	s	METAL, CHIP 10K 5% 1/10W
R649	1-216-067-00	s	METAL, CHIP 5.6K 5% 1/10W
R650	1-216-109-00	s	METAL, CHIP 330K 5% 1/10W

(SS-58C BOARD(SVP-5600P))

Ref. No. or Q'ty	Part No.	SP	Description
R651	1-216-081-00	s	METAL, CHIP 22K 5% 1/10W
R652	1-216-081-00	s	METAL, CHIP 22K 5% 1/10W
R653	1-216-073-00	s	METAL, CHIP 10K 5% 1/10W
R654	1-216-105-91	s	METAL, CHIP 220K 5% 1/10W
R666	1-216-057-00	s	METAL, CHIP 2.2K 5% 1/10W
R668	1-216-081-00	s	METAL, CHIP 22K 5% 1/10W
R669	1-216-081-00	s	METAL, CHIP 22K 5% 1/10W
R670	1-218-754-11	s	METAL, CHIP 120K 0.50% 1/10W
R674	1-216-121-00	s	METAL, CHIP 1M 5% 1/10W
R680	1-216-073-00	s	METAL, CHIP 10K 5% 1/10W
R686	1-216-065-00	s	METAL, CHIP 4.7K 5% 1/10W
R687	1-216-065-00	s	METAL, CHIP 4.7K 5% 1/10W
R690	1-216-097-00	s	METAL, CHIP 100K 5% 1/10W
RB101	1-236-907-11	s	RESISTOR BLOCK, CHIP 100Kx4
RB102	1-236-907-11	s	RESISTOR BLOCK, CHIP 100Kx4
RB103	1-236-904-11	s	RESISTOR BLOCK, CHIP 1Kx4
RB104	1-239-444-11	s	RESISTOR BLOCK, CHIP 220Kx4
RB105	1-239-412-11	s	RESISTOR BLOCK, CHIP 100x4
RB106	1-236-904-11	s	RESISTOR BLOCK, CHIP 1Kx4
RB107	1-236-907-11	s	RESISTOR BLOCK, CHIP 100Kx4
RB108	1-239-412-11	s	RESISTOR BLOCK, CHIP 100x4
RB109	1-239-389-11	s	RESISTOR BLOCK, CHIP 47Kx4
RB110	1-236-908-11	s	RESISTOR BLOCK, CHIP 10Kx4
RB112	1-239-448-11	s	RESISTOR BLOCK, CHIP 470Kx4
RB113	1-236-908-11	s	RESISTOR BLOCK, CHIP 10Kx4
RB114	1-236-908-11	s	RESISTOR BLOCK, CHIP 10Kx4
RB115	1-236-908-11	s	RESISTOR BLOCK, CHIP 10Kx4
RB302	1-236-904-11	s	RESISTOR BLOCK, CHIP 1Kx4
RB305	1-236-908-11	s	RESISTOR BLOCK, CHIP 10Kx4
RB306	1-236-904-11	s	RESISTOR BLOCK, CHIP 1Kx4
RB501	1-239-412-11	s	RESISTOR BLOCK, CHIP 100x4
RB502	1-239-389-11	s	RESISTOR BLOCK, CHIP 47Kx4
RB503	1-239-389-11	s	RESISTOR BLOCK, CHIP 47Kx4
RB504	1-239-389-11	s	RESISTOR BLOCK, CHIP 47Kx4
RB505	1-239-389-11	s	RESISTOR BLOCK, CHIP 47Kx4
RB506	1-239-389-11	s	RESISTOR BLOCK, CHIP 47Kx4
RB507	1-236-904-11	s	RESISTOR BLOCK, CHIP 1Kx4
RB508	1-236-904-11	s	RESISTOR BLOCK, CHIP 1Kx4
RB510	1-236-904-11	s	RESISTOR BLOCK, CHIP 1Kx4
RB511	1-239-412-11	s	RESISTOR BLOCK, CHIP 100x4
RV301	1-238-019-11	s	RES, ADJ CARBON 47K
RV601	1-241-628-11	s	RES, ADJ CARBON 2.2K
S101	1-570-623-11	s	SWITCH, DIP 8-CKT
X101	1-760-465-11	s	CRYSTAL 16.00MHz
X501	1-760-429-11	s	CRYSTAL 14.50MHz
X502	1-760-337-21	s	CRYSTAL 12.00MHz
X503	1-760-464-11	s	CRYSTAL 4.9152MHz
X504	1-579-125-11	s	CERAMIC 8.00MHz
X601	1-577-082-11	s	CERAMIC 4.00MHz
X602	1-567-504-95	s	CRYSTAL 4.433619MHz

SW-668 BOARD

Ref. No. or Q'ty	Part No.	SP	Description
1pc	1-650-155-11	o	PRINTED CIRCUIT BOARD, SW-668
S2	1-570-953-11	s	SWITCH, PUSH

SW-673 BOARD

Ref. No. or Q'ty	Part No.	SP	Description
1pc	1-650-382-11	o	PRINTED CIRCUIT BOARD, SW-673
S3	1-570-953-11	s	SWITCH, PUSH

TBC-30A BOARD

Ref. No. or Q'ty	Part No.	SP	Description
1pc	A-8265-869-A	o	MOUNTED CIRCUIT BOARD, TBC-30A
1pc	3-682-294-01	o	CASE, SHIELD, TBC
1pc	3-682-295-01	o	CASE, SHIELD, TBC, LID BOTTOM
1pc	3-179-084-01	s	LEVER (R), PC BOARD
1pc	3-179-085-01	s	LEVER (L), PC BOARD
1pc	1-766-927-11	s	BUS-BAR
C1	1-164-004-11	s	CERAMIC, CHIP 0.1uF 10% 25V
C2	1-164-004-11	s	CERAMIC, CHIP 0.1uF 10% 25V
C105	1-163-127-00	s	CERAMIC, CHIP 270PF 5% 50V
C107	1-163-139-00	s	CERAMIC, CHIP 820PF 5% 50V
C108	1-163-038-91	s	CERAMIC, CHIP 0.1uF 25V
C109	1-163-038-91	s	CERAMIC, CHIP 0.1uF 25V
C110	1-164-232-11	s	CERAMIC, CHIP 0.01uF 10% 100V
C111	1-164-232-11	s	CERAMIC, CHIP 0.01uF 10% 100V
C112	1-124-903-11	s	ELECT 1uF 20% 50V
C113	1-126-933-11	s	ELECT 100uF 20% 16V
C114	1-163-038-91	s	CERAMIC, CHIP 0.1uF 25V
C115	1-163-038-91	s	CERAMIC, CHIP 0.1uF 25V
C117	1-163-275-11	s	CERAMIC, CHIP 0.001uF 5% 50V
C118	1-163-251-11	s	CERAMIC, CHIP 100PF 5% 50V
C119	1-164-161-11	s	CERAMIC, CHIP 0.0022uF 10% 100V
C120	1-163-038-91	s	CERAMIC, CHIP 0.1uF 25V
C121	1-126-933-11	s	ELECT 100uF 20% 16V
C122	1-163-038-91	s	CERAMIC, CHIP 0.1uF 25V
C123	1-163-038-91	s	CERAMIC, CHIP 0.1uF 25V
C124	1-163-038-91	s	CERAMIC, CHIP 0.1uF 25V
C125	1-163-038-91	s	CERAMIC, CHIP 0.1uF 25V
C126	1-126-933-11	s	ELECT 100uF 20% 16V
C128	1-126-933-11	s	ELECT 100uF 20% 16V
C129	1-163-038-91	s	CERAMIC, CHIP 0.1uF 25V
C132	1-126-933-11	s	ELECT 100uF 20% 16V
C134	1-163-243-11	s	CERAMIC, CHIP 47PF 5% 50V
C135	1-163-038-91	s	CERAMIC, CHIP 0.1uF 25V
C136	1-164-182-11	s	CERAMIC, CHIP 3300PF 10% 100V
C137	1-164-182-11	s	CERAMIC, CHIP 3300PF 10% 100V
C138	1-131-350-00	s	TANTALUM 3.3uF 10% 35V
C140	1-163-125-00	s	CERAMIC, CHIP 220PF 5% 50V
C141	1-163-097-00	s	CERAMIC, CHIP 15PF 5% 50V
C144	1-164-232-11	s	CERAMIC, CHIP 0.01uF 10% 100V
C145	1-164-232-11	s	CERAMIC, CHIP 0.01uF 10% 100V
C146	1-163-038-91	s	CERAMIC, CHIP 0.1uF 25V
C147	1-126-933-11	s	ELECT 100uF 20% 16V
C148	1-163-038-91	s	CERAMIC, CHIP 0.1uF 25V
C149	1-126-933-11	s	ELECT 100uF 20% 16V
C150	1-163-235-11	s	CERAMIC, CHIP 22PF 5% 50V
C200	1-126-933-11	s	ELECT 100uF 20% 16V
C201	1-163-038-91	s	CERAMIC, CHIP 0.1uF 25V
C202	1-126-933-11	s	ELECT 100uF 20% 16V
C203	1-163-038-91	s	CERAMIC, CHIP 0.1uF 25V
C204	1-126-933-11	s	ELECT 100uF 20% 16V
C205	1-126-933-11	s	ELECT 100uF 20% 16V
C206	1-131-350-00	s	TANTALUM 3.3uF 10% 35V
C207	1-163-038-91	s	CERAMIC, CHIP 0.1uF 25V
C208	1-126-933-11	s	ELECT 100uF 20% 16V
C209	1-163-243-11	s	CERAMIC, CHIP 47PF 5% 50V
C210	1-163-243-11	s	CERAMIC, CHIP 47PF 5% 50V
C211	1-163-038-91	s	CERAMIC, CHIP 0.1uF 25V
C212	1-164-232-11	s	CERAMIC, CHIP 0.01uF 10% 100V

(TBC-30A BOARD)

Ref. No. or Q'ty	Part No.	SP	Description
C213	1-163-017-00	s	CERAMIC, CHIP 0.0047uF 5% 50V
C214	1-164-232-11	s	CERAMIC, CHIP 0.01uF 10% 100V
C215	1-164-232-11	s	CERAMIC, CHIP 0.01uF 10% 100V
C216	1-163-038-91	s	CERAMIC, CHIP 0.1uF 25V
C217	1-163-038-91	s	CERAMIC, CHIP 0.1uF 25V
C218	1-126-933-11	s	ELECT 100uF 20% 16V
C219-223	1-163-038-91	s	CERAMIC, CHIP 0.1uF 25V
C225	1-163-038-91	s	CERAMIC, CHIP 0.1uF 25V
C226	1-163-038-91	s	CERAMIC, CHIP 0.1uF 25V
C227	1-126-933-11	s	ELECT 100uF 20% 16V
C228	1-164-232-11	s	CERAMIC, CHIP 0.01uF 10% 100V
C230	1-163-038-91	s	CERAMIC, CHIP 0.1uF 25V
C231	1-126-933-11	s	ELECT 100uF 20% 16V
C240	1-164-232-11	s	CERAMIC, CHIP 0.01uF 10% 100V
C242	1-164-232-11	s	CERAMIC, CHIP 0.01uF 10% 100V
C243	1-163-038-91	s	CERAMIC, CHIP 0.1uF 25V
C244	1-126-933-11	s	ELECT 100uF 20% 16V
C245	1-163-038-91	s	CERAMIC, CHIP 0.1uF 25V
C247	1-126-933-11	s	ELECT 100uF 20% 16V
C248	1-164-232-11	s	CERAMIC, CHIP 0.01uF 10% 100V
C249	1-163-038-91	s	CERAMIC, CHIP 0.1uF 25V
C250	1-163-263-11	s	CERAMIC, CHIP 330PF 5% 50V
C251	1-126-933-11	s	ELECT 100uF 20% 16V
C252	1-163-038-91	s	CERAMIC, CHIP 0.1uF 25V
C254	1-163-235-11	s	CERAMIC, CHIP 22PF 5% 50V
C255	1-163-235-11	s	CERAMIC, CHIP 22PF 5% 50V
C256	1-163-133-00	s	CERAMIC, CHIP 470PF 5% 50V
C257	1-164-232-11	s	CERAMIC, CHIP 0.01uF 10% 100V
C258	1-164-232-11	s	CERAMIC, CHIP 0.01uF 10% 100V
C259	1-163-038-91	s	CERAMIC, CHIP 0.1uF 25V
C260	1-164-232-11	s	CERAMIC, CHIP 0.01uF 10% 100V
C261	1-164-346-11	s	CERAMIC 1uF 16V
C262	1-163-121-00	s	CERAMIC, CHIP 150PF 5% 50V
C263	1-131-345-00	s	TANTALUM 0.47uF 10% 35V
C264	1-126-964-11	s	ELECT 10uF 20% 50V
C265	1-163-239-11	s	CERAMIC, CHIP 33PF 5% 50V
C266	1-163-239-11	s	CERAMIC, CHIP 33PF 5% 50V
C269	1-164-232-11	s	CERAMIC, CHIP 0.01uF 10% 100V
C270	1-164-232-11	s	CERAMIC, CHIP 0.01uF 10% 100V
C271	1-163-037-11	s	CERAMIC, CHIP 0.022uF 10% 25V
C300	1-163-038-91	s	CERAMIC, CHIP 0.1uF 25V
C301	1-126-933-11	s	ELECT 100uF 20% 16V
C302	1-163-038-91	s	CERAMIC, CHIP 0.1uF 25V
C303	1-163-038-91	s	CERAMIC, CHIP 0.1uF 25V
C304	1-126-933-11	s	ELECT 100uF 20% 16V
C305	1-163-038-91	s	CERAMIC, CHIP 0.1uF 25V
C308	1-163-037-11	s	CERAMIC, CHIP 0.022uF 10% 25V
C310-314	1-126-933-11	s	ELECT 100uF 20% 16V
C318	1-163-038-91	s	CERAMIC, CHIP 0.1uF 25V
C319	1-126-933-11	s	ELECT 100uF 20% 16V
C320	1-163-038-91	s	CERAMIC, CHIP 0.1uF 25V
C321	1-126-933-11	s	ELECT 100uF 20% 16V
C322	1-126-933-11	s	ELECT 100uF 20% 16V
C323	1-163-038-91	s	CERAMIC, CHIP 0.1uF 25V
C324	1-163-235-11	s	CERAMIC, CHIP 22PF 5% 50V
C325	1-163-241-11	s	CERAMIC, CHIP 39PF 5% 50V
C326	1-163-037-11	s	CERAMIC, CHIP 0.022uF 10% 25V
C327	1-163-241-11	s	CERAMIC, CHIP 39PF 5% 50V
C328	1-163-121-00	s	CERAMIC, CHIP 150PF 5% 50V

(TBC-30A BOARD)

Ref. No. or Q'ty	Part No.	SP	Description
C329	1-163-037-11	s	CERAMIC, CHIP 0.022uF 10% 25V
C330	1-163-097-00	s	CERAMIC, CHIP 15PF 5% 50V
C331	1-163-125-00	s	CERAMIC, CHIP 220PF 5% 50V
C332	1-124-903-11	s	ELECT 1uF 20% 50V
C334	1-164-232-11	s	CERAMIC, CHIP 0.01uF 10% 100V
C335	1-126-964-11	s	ELECT 10uF 20% 50V
C336	1-163-235-11	s	CERAMIC, CHIP 22PF 5% 50V
C338	1-163-038-91	s	CERAMIC, CHIP 0.1uF 25V
C339	1-126-933-11	s	ELECT 100uF 20% 16V
C340	1-163-037-11	s	CERAMIC, CHIP 0.022uF 10% 25V
C341	1-126-933-11	s	ELECT 100uF 20% 16V
C342	1-126-933-11	s	ELECT 100uF 20% 16V
C343	1-163-257-11	s	CERAMIC, CHIP 180PF 5% 50V
C344	1-163-235-11	s	CERAMIC, CHIP 22PF 5% 50V
C345	1-163-037-11	s	CERAMIC, CHIP 0.022uF 10% 25V
C346	1-164-232-11	s	CERAMIC, CHIP 0.01uF 10% 100V
C347	1-163-037-11	s	CERAMIC, CHIP 0.022uF 10% 25V
C348	1-163-038-91	s	CERAMIC, CHIP 0.1uF 25V
C349	1-164-232-11	s	CERAMIC, CHIP 0.01uF 10% 100V
C350	1-163-037-11	s	CERAMIC, CHIP 0.022uF 10% 25V
C353	1-126-933-11	s	ELECT 100uF 20% 16V
C354	1-163-243-11	s	CERAMIC, CHIP 47PF 5% 50V
C355	1-163-239-11	s	CERAMIC, CHIP 33PF 5% 50V
C356	1-164-232-11	s	CERAMIC, CHIP 0.01uF 10% 100V
C357	1-164-232-11	s	CERAMIC, CHIP 0.01uF 10% 100V
C358	1-163-038-91	s	CERAMIC, CHIP 0.1uF 25V
C359	1-126-933-11	s	ELECT 100uF 20% 16V
C360	1-163-263-11	s	CERAMIC, CHIP 330PF 5% 50V
C361	1-164-232-11	s	CERAMIC, CHIP 0.01uF 10% 100V
C362	1-164-232-11	s	CERAMIC, CHIP 0.01uF 10% 100V
C363	1-164-232-11	s	CERAMIC, CHIP 0.01uF 10% 100V
C364	1-163-038-91	s	CERAMIC, CHIP 0.1uF 25V
C365	1-164-232-11	s	CERAMIC, CHIP 0.01uF 10% 100V
C366	1-164-232-11	s	CERAMIC, CHIP 0.01uF 10% 100V
C368	1-164-232-11	s	CERAMIC, CHIP 0.01uF 10% 100V
C369	1-163-037-11	s	CERAMIC, CHIP 0.022uF 10% 25V
C370	1-164-232-11	s	CERAMIC, CHIP 0.01uF 10% 100V
C371	1-163-037-11	s	CERAMIC, CHIP 0.022uF 10% 25V
C400	1-126-933-11	s	ELECT 100uF 20% 16V
C401	1-163-239-11	s	CERAMIC, CHIP 33PF 5% 50V
C402	1-163-125-00	s	CERAMIC, CHIP 220PF 5% 50V
C403	1-163-038-91	s	CERAMIC, CHIP 0.1uF 25V
C404	1-163-239-11	s	CERAMIC, CHIP 33PF 5% 50V
C405	1-126-933-11	s	ELECT 100uF 20% 16V
C406	1-126-933-11	s	ELECT 100uF 20% 16V
C407	1-163-038-91	s	CERAMIC, CHIP 0.1uF 25V
C408	1-163-038-91	s	CERAMIC, CHIP 0.1uF 25V
C409	1-126-933-11	s	ELECT 100uF 20% 16V
C416	1-164-232-11	s	CERAMIC, CHIP 0.01uF 10% 100V
C417	1-163-251-11	s	CERAMIC, CHIP 100PF 5% 50V
C424	1-126-933-11	s	ELECT 100uF 20% 16V
C425	1-163-038-91	s	CERAMIC, CHIP 0.1uF 25V
C426	1-163-038-91	s	CERAMIC, CHIP 0.1uF 25V
C427	1-124-902-00	s	ELECT 0.47uF 20% 50V
C428	1-126-964-11	s	ELECT 10uF 20% 50V
C429	1-163-237-11	s	CERAMIC, CHIP 27PF 5% 50V
C430	1-163-251-11	s	CERAMIC, CHIP 100PF 5% 50V
C431	1-164-232-11	s	CERAMIC, CHIP 0.01uF 10% 100V
C432	1-163-263-11	s	CERAMIC, CHIP 330PF 5% 50V

(TBC-30A BOARD)

Ref. No. or Q'ty	Part No.	SP	Description
C433	1-126-933-11	s	ELECT 100uF 20% 16V
C434	1-163-038-91	s	CERAMIC, CHIP 0.1uF 25V
C435	1-163-038-91	s	CERAMIC, CHIP 0.1uF 25V
C436	1-163-038-91	s	CERAMIC, CHIP 0.1uF 25V
C437	1-126-933-11	s	ELECT 100uF 20% 16V
C438	1-163-038-91	s	CERAMIC, CHIP 0.1uF 25V
C443	1-163-235-11	s	CERAMIC, CHIP 22PF 5% 50V
C444	1-163-037-11	s	CERAMIC, CHIP 0.022uF 10% 25V
C445	1-163-038-91	s	CERAMIC, CHIP 0.1uF 25V
C446	1-163-037-11	s	CERAMIC, CHIP 0.022uF 10% 25V
C447	1-163-239-11	s	CERAMIC, CHIP 33PF 5% 50V
C450	1-163-037-11	s	CERAMIC, CHIP 0.022uF 10% 25V
C451	1-164-232-11	s	CERAMIC, CHIP 0.01uF 10% 100V
C452	1-126-964-11	s	ELECT 10uF 20% 50V
C453	1-163-017-00	s	CERAMIC, CHIP 0.0047uF 5% 50V
C454	1-163-237-11	s	CERAMIC, CHIP 27PF 5% 50V
C455	1-163-251-11	s	CERAMIC, CHIP 100PF 5% 50V
C456	1-164-232-11	s	CERAMIC, CHIP 0.01uF 10% 100V
C457	1-163-263-11	s	CERAMIC, CHIP 330PF 5% 50V
C458	1-163-038-91	s	CERAMIC, CHIP 0.1uF 25V
C459	1-163-038-91	s	CERAMIC, CHIP 0.1uF 25V
C460	1-126-933-11	s	ELECT 100uF 20% 16V
C461	1-163-038-91	s	CERAMIC, CHIP 0.1uF 25V
C462	1-163-239-11	s	CERAMIC, CHIP 33PF 5% 50V
C463	1-163-037-11	s	CERAMIC, CHIP 0.022uF 10% 25V
C464	1-163-038-91	s	CERAMIC, CHIP 0.1uF 25V
C465	1-163-037-11	s	CERAMIC, CHIP 0.022uF 10% 25V
C466	1-163-038-91	s	CERAMIC, CHIP 0.1uF 25V
C467	1-163-038-91	s	CERAMIC, CHIP 0.1uF 25V
C468	1-163-038-91	s	CERAMIC, CHIP 0.1uF 25V
C469	1-163-037-11	s	CERAMIC, CHIP 0.022uF 10% 25V
C470	1-163-227-11	s	CERAMIC, CHIP 10PF 5% 50V
C471	1-163-227-11	s	CERAMIC, CHIP 10PF 5% 50V
C472	1-163-251-11	s	CERAMIC, CHIP 100PF 5% 50V
C473	1-163-038-91	s	CERAMIC, CHIP 0.1uF 25V
C474	1-163-237-11	s	CERAMIC, CHIP 27PF 5% 50V
C475	1-163-251-11	s	CERAMIC, CHIP 100PF 5% 50V
C476	1-164-232-11	s	CERAMIC, CHIP 0.01uF 10% 100V
C477	1-163-263-11	s	CERAMIC, CHIP 330PF 5% 50V
C478	1-163-038-91	s	CERAMIC, CHIP 0.1uF 25V
C479	1-163-038-91	s	CERAMIC, CHIP 0.1uF 25V
C480	1-126-933-11	s	ELECT 100uF 20% 16V
C481	1-163-038-91	s	CERAMIC, CHIP 0.1uF 25V
C482	1-163-038-91	s	CERAMIC, CHIP 0.1uF 25V
C483	1-163-133-00	s	CERAMIC, CHIP 470PF 5% 50V
C484	1-163-133-00	s	CERAMIC, CHIP 470PF 5% 50V
C485	1-163-038-91	s	CERAMIC, CHIP 0.1uF 25V
C492	1-163-038-91	s	CERAMIC, CHIP 0.1uF 25V
C493	1-163-038-91	s	CERAMIC, CHIP 0.1uF 25V
C494	1-163-235-11	s	CERAMIC, CHIP 22PF 5% 50V
C495	1-164-232-11	s	CERAMIC, CHIP 0.01uF 10% 100V
C504	1-164-232-11	s	CERAMIC, CHIP 0.01uF 10% 100V
C505	1-164-232-11	s	CERAMIC, CHIP 0.01uF 10% 100V
C506	1-164-232-11	s	CERAMIC, CHIP 0.01uF 10% 100V
C601	1-163-227-11	s	CERAMIC, CHIP 10PF 5% 50V
C602	1-126-964-11	s	ELECT 10uF 20% 50V
C603	1-164-232-11	s	CERAMIC, CHIP 0.01uF 10% 100V
C604	1-124-903-11	s	ELECT 1uF 20% 50V
C605	1-126-933-11	s	ELECT 100uF 20% 16V

(TBC-30A BOARD)

Ref. No. or Q'ty	Part No.	SP	Description
C606	1-124-903-11	s	ELECT 1uF 20% 50V
C607	1-164-232-11	s	CERAMIC, CHIP 0.01uF 10% 100V
C608	1-163-038-91	s	CERAMIC, CHIP 0.1uF 25V
C609	1-163-038-91	s	CERAMIC, CHIP 0.1uF 25V
C610	1-126-933-11	s	ELECT 100uF 20% 16V
C611	1-164-232-11	s	CERAMIC, CHIP 0.01uF 10% 100V
C612	1-164-232-11	s	CERAMIC, CHIP 0.01uF 10% 100V
C613	1-164-232-11	s	CERAMIC, CHIP 0.01uF 10% 100V
C614	1-164-232-11	s	CERAMIC, CHIP 0.01uF 10% 100V
C615	1-163-038-91	s	CERAMIC, CHIP 0.1uF 25V
C616	1-124-903-11	s	ELECT 1uF 20% 50V
C617	1-126-964-11	s	ELECT 10uF 20% 50V
C618	1-124-927-11	s	ELECT 4.7uF 20% 100V
C619	1-126-933-11	s	ELECT 100uF 20% 16V
C620	1-163-038-91	s	CERAMIC, CHIP 0.1uF 25V
C621	1-124-927-11	s	ELECT 4.7uF 20% 100V
C622	1-164-232-11	s	CERAMIC, CHIP 0.01uF 10% 100V
C623	1-126-933-11	s	ELECT 100uF 20% 16V
C624	1-126-933-11	s	ELECT 100uF 20% 16V
C625	1-164-232-11	s	CERAMIC, CHIP 0.01uF 10% 100V
C626	1-126-933-11	s	ELECT 100uF 20% 16V
C627	1-163-227-11	s	CERAMIC, CHIP 10PF 5% 50V
C628	1-164-232-11	s	CERAMIC, CHIP 0.01uF 10% 100V
C629	1-164-232-11	s	CERAMIC, CHIP 0.01uF 10% 100V
C630	1-164-232-11	s	CERAMIC, CHIP 0.01uF 10% 100V
C631	1-126-933-11	s	ELECT 100uF 20% 16V
C632	1-124-903-11	s	ELECT 1uF 20% 50V
C633	1-164-232-11	s	CERAMIC, CHIP 0.01uF 10% 100V
C634	1-163-038-91	s	CERAMIC, CHIP 0.1uF 25V
C635	1-163-038-91	s	CERAMIC, CHIP 0.1uF 25V
C636	1-126-933-11	s	ELECT 100uF 20% 16V
C637	1-164-232-11	s	CERAMIC, CHIP 0.01uF 10% 100V
C638	1-164-232-11	s	CERAMIC, CHIP 0.01uF 10% 100V
C639	1-164-232-11	s	CERAMIC, CHIP 0.01uF 10% 100V
C640	1-164-232-11	s	CERAMIC, CHIP 0.01uF 10% 100V
C641	1-163-038-91	s	CERAMIC, CHIP 0.1uF 25V
C642	1-164-232-11	s	CERAMIC, CHIP 0.01uF 10% 100V
C643	1-163-037-11	s	CERAMIC, CHIP 0.022uF 10% 25V
C644	1-163-037-11	s	CERAMIC, CHIP 0.022uF 10% 25V
C645	1-163-251-11	s	CERAMIC, CHIP 100PF 5% 50V
C648	1-163-037-11	s	CERAMIC, CHIP 0.022uF 10% 25V
C649	1-163-037-11	s	CERAMIC, CHIP 0.022uF 10% 25V
C650	1-164-232-11	s	CERAMIC, CHIP 0.01uF 10% 100V
C651	1-163-037-11	s	CERAMIC, CHIP 0.022uF 10% 25V
C652	1-163-037-11	s	CERAMIC, CHIP 0.022uF 10% 25V
C653	1-163-037-11	s	CERAMIC, CHIP 0.022uF 10% 25V
C654	1-164-232-11	s	CERAMIC, CHIP 0.01uF 10% 100V
C655	1-163-251-11	s	CERAMIC, CHIP 100PF 5% 50V
C658	1-164-232-11	s	CERAMIC, CHIP 0.01uF 10% 100V
C659	1-163-037-11	s	CERAMIC, CHIP 0.022uF 10% 25V
C660	1-163-037-11	s	CERAMIC, CHIP 0.022uF 10% 25V
C661	1-164-232-11	s	CERAMIC, CHIP 0.01uF 10% 100V
C662	1-126-964-11	s	ELECT 10uF 20% 50V
C663	1-163-037-11	s	CERAMIC, CHIP 0.022uF 10% 25V
C664	1-163-243-11	s	CERAMIC, CHIP 47PF 5% 50V
CN401	1-766-793-11	o	CONNECTOR, DIN 64P, MALE
CN402	1-766-793-11	o	CONNECTOR, DIN 64P, MALE
CV100	1-141-423-61	s	CAP, TRIMMER, CHIP 20pF

(TBC-30A BOARD)

Ref. No. or Q'ty	Part No.	SP	Description
CV200	1-141-423-61	s	CAP, TRIMMER, CHIP 20pF
CV400	1-141-423-61	s	CAP, TRIMMER, CHIP 20pF
CV401	1-141-423-61	s	CAP, TRIMMER, CHIP 20pF
CV402	1-141-423-61	s	CAP, TRIMMER, CHIP 20pF
D104	8-719-002-81	s	DIODE 1T363A-M20-T8A
D201	8-713-102-23	s	DIODE 1T362A-M20E-T8A
D202	8-719-104-34	s	DIODE 1S2835
D203	8-719-800-76	s	DIODE 1SS226
D300	8-719-104-34	s	DIODE 1S2835
D301	8-719-104-34	s	DIODE 1S2835
D302	8-719-104-34	s	DIODE 1S2835
D303	8-719-801-78	s	DIODE 1S2837-T1
D401	8-719-106-23	s	DIODE RD7.5MB2
D404	8-719-002-81	s	DIODE 1T363A-M20-T8A
D405	8-719-002-81	s	DIODE 1T363A-M20-T8A
D406	8-719-002-81	s	DIODE 1T363A-M20-T8A
FL201	1-239-975-11	s	FILTER, BAND-PASS 4.43MHz
FL300	1-239-085-11	s	FILTER, LOW-PASS 5MHz
FL301	1-239-975-11	s	FILTER, BAND-PASS 4.43MHz
FL601	1-236-773-21	s	FILTER, LOW-PASS 10.7MHz
FL602	1-236-773-21	s	FILTER, LOW-PASS 10.7MHz
IC1	8-759-925-90	s	IC SN74HC74ANS
IC2	8-759-239-23	s	IC TC74HC86AF
IC3	8-759-925-90	s	IC SN74HC74ANS
IC4	8-759-239-55	s	IC TC74HC123AF
IC100	8-759-072-23	s	IC MB87647
IC101	8-759-239-58	s	IC TC74HC221AF
IC102	8-759-925-90	s	IC SN74HC74ANS
IC103	8-759-925-72	s	IC SN74HC02ANS
IC104	8-759-180-84	s	IC TC7W74F-TE12L
IC108	8-759-925-90	s	IC SN74HC74ANS
IC109	8-759-926-25	s	IC SN74HC165ANS-E05
IC110	8-759-089-60	s	IC MB87448A-003
IC111	8-759-157-17	s	IC PQ05SZ1U
IC112	8-759-186-84	s	IC TC74VHC86F(EL)
IC200	8-752-334-55	s	IC CXD1175M
IC201	8-759-987-17	s	IC CXD1226Q
IC202	8-759-926-29	s	IC SN74HC175ANS
IC203	8-759-927-46	s	IC SN74HC00ANS
IC204	8-759-925-85	s	IC SN74HC32ANS
IC205	8-752-340-52	s	IC CXK48324Q
IC207	8-752-340-75	s	IC CXK1206AM
IC208	8-759-926-24	s	IC SN74HC164ANS
IC209	8-759-926-15	s	IC SN74HC151ANS
IC210	8-759-926-56	s	IC SN74HC273ANS
IC211	8-752-334-55	s	IC CXD1175M
IC213	8-759-009-51	s	IC MC14538BF
IC214	8-759-234-20	s	IC TC7S08F
IC300	8-759-987-18	s	IC CXD1227Q
IC301	8-752-032-96	s	IC CXA1106M
IC302	8-759-700-43	s	IC NJM4558M
IC303	8-752-032-96	s	IC CXA1106M
IC304	8-759-239-23	s	IC TC74HC86AF
IC305	8-759-111-69	s	IC UPC1037HA
IC306	8-759-700-43	s	IC NJM4558M
IC307	8-759-180-84	s	IC TC7W74F-TE12L
IC308	8-759-700-43	s	IC NJM4558M
IC309	8-759-239-55	s	IC TC74HC123AF

(TBC-30A BOARD)

Ref. No. or Q'ty	Part No.	SP	Description
IC403	8-759-700-43	s	IC NJM4558M
IC405	8-759-239-55	s	IC TC74HC123AF
IC406	8-759-239-55	s	IC TC74HC123AF
IC407	8-759-700-43	s	IC NJM4558M
IC408	8-759-234-20	s	IC TC7S08F
IC409	8-752-306-51	s	IC CX23065A
IC411	8-752-335-47	s	IC CXD1216M
IC412	8-759-300-71	s	IC HD14053BFP
IC413	8-752-332-67	s	IC CXD1217M
IC414	8-759-925-74	s	IC TC74HC04ANS
IC415	8-759-927-46	s	IC SN74HC00ANS
IC416	8-759-037-79	s	IC SN74HC163ANS-E05
IC417	8-759-239-55	s	IC TC74HC123AF
IC418	8-759-700-43	s	IC NJM4558M
IC422	8-759-925-72	s	IC SN74HC02ANS
IC423	8-759-926-74	s	IC SN74HC393ANS
IC424	8-759-987-27	s	IC LM1881M
IC425	8-759-702-08	s	IC NJM360M
IC601	8-752-333-24	s	IC CXL1506M-T4
IC602	8-759-700-43	s	IC NJM4558M
IC603	8-752-053-21	s	IC CXA1211M-T4
IC604	8-759-256-44	s	IC NJM2235M-TE2
IC605	8-759-710-86	s	IC NJM2233BM-T1
IC606	8-752-333-24	s	IC CXL1506M-T4
IC607	8-759-710-86	s	IC NJM2233BM-T1
IC608	8-759-710-86	s	IC NJM2233BM-T1
IC609	8-759-231-30	s	IC TC4S30F(TE85R)
L1	1-543-775-11	s	FILTER, NOISE
L101	1-408-423-00	s	INDUCTOR 150uH
L103	1-410-482-31	s	INDUCTOR 100uH
L104	1-410-466-41	s	INDUCTOR 4.7uH
L105	1-543-775-11	s	FILTER, NOISE
L106	1-543-775-11	s	FILTER, NOISE
L107	1-543-775-11	s	FILTER, NOISE
L108	1-412-364-11	s	INDUCTOR 0uH
L109	1-412-364-11	s	INDUCTOR 0uH
L110	1-412-364-11	s	INDUCTOR 0uH
L111	1-412-364-11	s	INDUCTOR 0uH
L112	1-543-775-11	s	FILTER, NOISE
L113	1-412-364-11	s	INDUCTOR 0uH
L114	1-412-364-11	s	INDUCTOR 0uH
L115	1-543-775-11	s	FILTER, NOISE
L116	1-543-775-11	s	FILTER, NOISE
L200	1-410-482-31	s	INDUCTOR 100uH
L201	1-410-482-31	s	INDUCTOR 100uH
L202	1-410-482-31	s	INDUCTOR 100uH
L203	1-410-482-31	s	INDUCTOR 100uH
L204	1-410-482-31	s	INDUCTOR 100uH
L205	1-543-775-11	s	FILTER, NOISE
L206	1-543-775-11	s	FILTER, NOISE
L207	1-543-775-11	s	FILTER, NOISE
L208	1-410-482-31	s	INDUCTOR 100uH
L209	1-410-482-31	s	INDUCTOR 100uH
L210	1-410-460-11	s	INDUCTOR 1.5uH
L211	1-412-390-21	s	INDUCTOR CHIP 0uH
L300	1-410-478-11	s	INDUCTOR 47uH
L301	1-410-482-31	s	INDUCTOR 100uH
L302	1-410-482-31	s	INDUCTOR 100uH

(TBC-30A BOARD)

Ref. No. or Q'ty	Part No.	SP	Description
L303	1-410-478-11	s	INDUCTOR 47uH
L304	1-410-478-11	s	INDUCTOR 47uH
L305	1-408-413-00	s	INDUCTOR 22uH
L306	1-410-482-31	s	INDUCTOR 100uH
L307	1-412-390-21	s	INDUCTOR CHIP 0uH
L308	1-543-775-11	s	FILTER, NOISE
L309	1-543-775-11	s	FILTER, NOISE
L310	1-410-482-31	s	INDUCTOR 100uH
L311	1-543-775-11	s	FILTER, NOISE
L312	1-408-408-00	s	INDUCTOR 8.2uH
L313	1-543-775-11	s	FILTER, NOISE
L314	1-410-482-31	s	INDUCTOR 100uH
L315	1-410-482-31	s	INDUCTOR 100uH
L316	1-410-482-31	s	INDUCTOR 100uH
L317	1-412-390-21	s	INDUCTOR CHIP 0uH
L318	1-412-364-11	s	INDUCTOR 0uH
L319	1-412-364-11	s	INDUCTOR 0uH
L320	1-412-390-21	s	INDUCTOR CHIP 0uH
L321	1-543-775-11	s	FILTER, NOISE
L401	1-410-482-31	s	INDUCTOR 100uH
L402	1-408-419-00	s	INDUCTOR 68uH
L403	1-410-482-31	s	INDUCTOR 100uH
L404	1-410-482-31	s	INDUCTOR 100uH
L405	1-410-482-31	s	INDUCTOR 100uH
L406	1-410-482-31	s	INDUCTOR 100uH
L407	1-410-482-31	s	INDUCTOR 100uH
L408	1-410-482-31	s	INDUCTOR 100uH
L409	1-543-775-11	s	FILTER, NOISE
L410	1-410-482-31	s	INDUCTOR 100uH
L411-416	1-543-775-11	s	FILTER, NOISE
L601	1-543-775-11	s	FILTER, NOISE
L602	1-412-390-21	s	INDUCTOR CHIP 0uH
L603	1-412-390-21	s	INDUCTOR CHIP 0uH
L604	1-410-482-31	s	INDUCTOR 100uH
L605	1-410-470-11	s	INDUCTOR 10uH
L606	1-410-482-31	s	INDUCTOR 100uH
L607	1-412-390-21	s	INDUCTOR CHIP 0uH
L608	1-412-390-21	s	INDUCTOR CHIP 0uH
L609	1-412-390-21	s	INDUCTOR CHIP 0uH
L610	1-412-390-21	s	INDUCTOR CHIP 0uH
L612	1-410-470-11	s	INDUCTOR 10uH
L614	1-412-390-21	s	INDUCTOR CHIP 0uH
L615	1-412-390-21	s	INDUCTOR CHIP 0uH
L616	1-543-775-11	s	FILTER, NOISE
L617	1-543-775-11	s	FILTER, NOISE
L618	1-543-775-11	s	FILTER, NOISE
L619	1-543-775-11	s	FILTER, NOISE
Q100	8-729-230-49	s	TRANSISTOR 2SC2712-YG
Q101	8-729-216-22	s	TRANSISTOR 2SA1162
Q102	8-729-901-01	s	TRANSISTOR DTC144EK
Q202	8-729-230-49	s	TRANSISTOR 2SC2712-YG
Q203	8-729-230-49	s	TRANSISTOR 2SC2712-YG
Q204	8-729-230-49	s	TRANSISTOR 2SC2712-YG
Q205	8-729-230-49	s	TRANSISTOR 2SC2712-YG
Q206	8-729-230-49	s	TRANSISTOR 2SC2712-YG
Q207	8-729-230-49	s	TRANSISTOR 2SC2712-YG
Q208	8-729-230-49	s	TRANSISTOR 2SC2712-YG
Q210	8-729-901-01	s	TRANSISTOR DTC144EK

(TBC-30A BOARD)

Ref. No. or Q'ty	Part No.	SP	Description
Q211	8-729-201-27	s	TRANSISTOR 2SC2715-Y
Q212	8-729-122-63	s	TRANSISTOR 2SA1226
Q300	8-729-230-49	s	TRANSISTOR 2SC2712-YG
Q301	8-729-230-49	s	TRANSISTOR 2SC2712-YG
Q302	8-729-230-49	s	TRANSISTOR 2SC2712-YG
Q305	8-729-216-22	s	TRANSISTOR 2SA1162
Q306	8-729-230-49	s	TRANSISTOR 2SC2712-YG
Q307	8-729-216-22	s	TRANSISTOR 2SA1162
Q308	8-729-230-49	s	TRANSISTOR 2SC2712-YG
Q309	8-729-230-49	s	TRANSISTOR 2SC2712-YG
Q310	8-729-230-49	s	TRANSISTOR 2SC2712-YG
Q311	8-729-230-49	s	TRANSISTOR 2SC2712-YG
Q312	8-729-230-49	s	TRANSISTOR 2SC2712-YG
Q313	8-729-230-49	s	TRANSISTOR 2SC2712-YG
Q315	8-729-109-44	s	TRANSISTOR 2SK94
Q316	8-729-230-49	s	TRANSISTOR 2SC2712-YG
Q317	8-729-230-49	s	TRANSISTOR 2SC2712-YG
Q318	8-729-230-49	s	TRANSISTOR 2SC2712-YG
Q319	8-729-230-49	s	TRANSISTOR 2SC2712-YG
Q320	8-729-202-38	s	TRANSISTOR 2SC3326N
Q321	8-729-230-49	s	TRANSISTOR 2SC2712-YG
Q322	8-729-230-49	s	TRANSISTOR 2SC2712-YG
Q400	8-729-230-49	s	TRANSISTOR 2SC2712-YG
Q401	8-729-216-22	s	TRANSISTOR 2SA1162
Q417	8-729-109-44	s	TRANSISTOR 2SK94
Q418	8-729-201-27	s	TRANSISTOR 2SC2715-Y
Q419	8-729-140-47	s	TRANSISTOR 2SC3735-B34
Q420	8-729-109-44	s	TRANSISTOR 2SK94
Q421	8-729-201-27	s	TRANSISTOR 2SC2715-Y
Q422	8-729-140-47	s	TRANSISTOR 2SC3735-B34
Q423	8-729-201-27	s	TRANSISTOR 2SC2715-Y
Q424	8-729-140-47	s	TRANSISTOR 2SC3735-B34
Q601-611	8-729-230-49	s	TRANSISTOR 2SC2712-YG
Q612	8-729-901-01	s	TRANSISTOR DTC144EK
Q613	8-729-901-01	s	TRANSISTOR DTC144EK
Q614	8-729-901-06	s	TRANSISTOR DTA144EK
Q615	8-729-901-01	s	TRANSISTOR DTC144EK
R1	1-216-097-00	s	METAL, CHIP 100K 5% 1/10W
R103	1-216-041-00	s	METAL, CHIP 470 5% 1/10W
R104	1-216-061-00	s	METAL, CHIP 3.3K 5% 1/10W
R105	1-216-073-00	s	METAL, CHIP 10K 5% 1/10W
R106	1-216-073-00	s	METAL, CHIP 10K 5% 1/10W
R107	1-216-073-00	s	METAL, CHIP 10K 5% 1/10W
R108	1-216-057-00	s	METAL, CHIP 2.2K 5% 1/10W
R109	1-216-061-00	s	METAL, CHIP 3.3K 5% 1/10W
R110	1-216-117-00	s	METAL, CHIP 680K 5% 1/10W
R111	1-216-057-00	s	METAL, CHIP 2.2K 5% 1/10W
R112	1-216-021-00	s	METAL, CHIP 68 5% 1/10W
R113	1-216-049-00	s	METAL, CHIP 1K 5% 1/10W
R114	1-216-057-00	s	METAL, CHIP 2.2K 5% 1/10W
R115	1-216-019-00	s	METAL, CHIP 56 5% 1/10W
R116	1-216-049-00	s	METAL, CHIP 1K 5% 1/10W
R117	1-216-691-11	s	METAL, CHIP 47K 0.5% 1/10W
R118	1-216-687-11	s	METAL, CHIP 33K 0.5% 1/10W
R119	1-216-065-00	s	METAL, CHIP 4.7K 5% 1/10W
R120	1-216-049-00	s	METAL, CHIP 1K 5% 1/10W
R121	1-216-089-00	s	METAL, CHIP 47K 5% 1/10W
R122	1-216-073-00	s	METAL, CHIP 10K 5% 1/10W

(TBC-30A BOARD)

Ref. No. or Q'ty	Part No.	SP	Description
R124	1-216-295-91	s	RES, CHIP 0
R125	1-216-295-91	s	RES, CHIP 0
R126	1-216-295-91	s	RES, CHIP 0
R127	1-216-295-91	s	RES, CHIP 0
R130	1-216-295-91	s	RES, CHIP 0
R132	1-216-295-91	s	RES, CHIP 0
R135	1-216-691-11	s	METAL, CHIP 47K 0.5% 1/10W
R136	1-216-049-00	s	METAL, CHIP 1K 5% 1/10W
R138	1-216-085-00	s	METAL, CHIP 33K 5% 1/10W
R139	1-216-069-00	s	METAL, CHIP 6.8K 5% 1/10W
R140	1-216-073-00	s	METAL, CHIP 10K 5% 1/10W
R141	1-216-085-00	s	METAL, CHIP 33K 5% 1/10W
R142	1-216-049-00	s	METAL, CHIP 1K 5% 1/10W
R158	1-216-049-00	s	METAL, CHIP 1K 5% 1/10W
R160	1-216-073-00	s	METAL, CHIP 10K 5% 1/10W
R200	1-216-645-11	s	METAL, CHIP 560 0.5% 1/10W
R201	1-216-041-00	s	METAL, CHIP 470 5% 1/10W
R202	1-216-073-00	s	METAL, CHIP 10K 5% 1/10W
R203	1-216-651-11	s	METAL, CHIP 1K 0.5% 1/10W
R204	1-216-049-00	s	METAL, CHIP 1K 5% 1/10W
R205	1-216-079-00	s	METAL, CHIP 18K 5% 1/10W
R206	1-216-073-00	s	METAL, CHIP 10K 5% 1/10W
R207	1-216-049-00	s	METAL, CHIP 1K 5% 1/10W
R208	1-216-047-00	s	METAL, CHIP 820 5% 1/10W
R209	1-216-073-00	s	METAL, CHIP 10K 5% 1/10W
R210	1-216-049-00	s	METAL, CHIP 1K 5% 1/10W
R212	1-216-025-00	s	METAL, CHIP 100 5% 1/10W
R213	1-216-079-00	s	METAL, CHIP 18K 5% 1/10W
R214	1-216-089-00	s	METAL, CHIP 47K 5% 1/10W
R216	1-216-119-00	s	METAL, CHIP 820K 5% 1/10W
R217	1-216-111-00	s	METAL, CHIP 390K 5% 1/10W
R218	1-216-105-91	s	METAL, CHIP 220K 5% 1/10W
R219	1-216-097-00	s	METAL, CHIP 100K 5% 1/10W
R220	1-216-295-91	s	RES, CHIP 0
R221	1-216-073-00	s	METAL, CHIP 10K 5% 1/10W
R222	1-216-295-91	s	RES, CHIP 0
R223	1-216-025-00	s	METAL, CHIP 100 5% 1/10W
R224	1-216-651-11	s	METAL, CHIP 1K 0.5% 1/10W
R227	1-216-041-00	s	METAL, CHIP 470 5% 1/10W
R229	1-216-073-00	s	METAL, CHIP 10K 5% 1/10W
R230	1-216-651-11	s	METAL, CHIP 1K 0.5% 1/10W
R231	1-216-049-00	s	METAL, CHIP 1K 5% 1/10W
R232	1-216-079-00	s	METAL, CHIP 18K 5% 1/10W
R233	1-216-073-00	s	METAL, CHIP 10K 5% 1/10W
R234	1-216-049-00	s	METAL, CHIP 1K 5% 1/10W
R235	1-216-025-00	s	METAL, CHIP 100 5% 1/10W
R240	1-216-089-00	s	METAL, CHIP 47K 5% 1/10W
R241	1-216-073-00	s	METAL, CHIP 10K 5% 1/10W
R242	1-216-675-11	s	METAL, CHIP 10K 0.5% 1/10W
R243	1-216-675-11	s	METAL, CHIP 10K 0.5% 1/10W
R244	1-216-025-00	s	METAL, CHIP 100 5% 1/10W
R245	1-216-295-91	s	RES, CHIP 0
R248	1-216-295-91	s	RES, CHIP 0
R251	1-216-119-00	s	METAL, CHIP 820K 5% 1/10W
R252	1-216-111-00	s	METAL, CHIP 390K 5% 1/10W
R253	1-216-105-91	s	METAL, CHIP 220K 5% 1/10W
R254	1-216-097-00	s	METAL, CHIP 100K 5% 1/10W
R255	1-216-073-00	s	METAL, CHIP 10K 5% 1/10W
R256	1-216-121-00	s	METAL, CHIP 1M 5% 1/10W

(TBC-30A BOARD)

Ref. No. or Q'ty	Part No.	SP	Description
R257	1-216-049-00	s	METAL, CHIP 1K 5% 1/10W
R258	1-216-683-11	s	METAL, CHIP 22K 0.5% 1/10W
R259	1-216-073-00	s	METAL, CHIP 10K 5% 1/10W
R260	1-216-085-00	s	METAL, CHIP 33K 5% 1/10W
R261	1-216-077-00	s	METAL, CHIP 15K 5% 1/10W
R262	1-216-077-00	s	METAL, CHIP 15K 5% 1/10W
R263	1-216-011-00	s	METAL 27 5% 1/10W
R264	1-216-025-00	s	METAL, CHIP 100 5% 1/10W
R265	1-216-041-00	s	METAL, CHIP 470 5% 1/10W
R266	1-216-049-00	s	METAL, CHIP 1K 5% 1/10W
R267	1-216-097-00	s	METAL, CHIP 100K 5% 1/10W
R268	1-216-097-00	s	METAL, CHIP 100K 5% 1/10W
R301	1-216-117-00	s	METAL, CHIP 680K 5% 1/10W
R302	1-216-648-11	s	METAL, CHIP 750 0.5% 1/10W
R303	1-216-061-00	s	METAL, CHIP 3.3K 5% 1/10W
R304	1-216-089-00	s	METAL, CHIP 47K 5% 1/10W
R305	1-216-117-00	s	METAL, CHIP 680K 5% 1/10W
R306	1-216-097-00	s	METAL, CHIP 100K 5% 1/10W
R307	1-216-097-00	s	METAL, CHIP 100K 5% 1/10W
R308	1-216-057-00	s	METAL, CHIP 2.2K 5% 1/10W
R309	1-216-089-00	s	METAL, CHIP 47K 5% 1/10W
R310	1-216-081-00	s	METAL, CHIP 22K 5% 1/10W
R311	1-216-051-00	s	METAL, CHIP 1.2K 5% 1/10W
R312	1-216-073-00	s	METAL, CHIP 10K 5% 1/10W
R313	1-216-057-00	s	METAL, CHIP 2.2K 5% 1/10W
R314	1-216-073-00	s	METAL, CHIP 10K 5% 1/10W
R315	1-216-041-00	s	METAL, CHIP 470 5% 1/10W
R316	1-216-037-00	s	METAL, CHIP 330 5% 1/10W
R317	1-216-073-00	s	METAL, CHIP 10K 5% 1/10W
R318	1-216-651-11	s	METAL, CHIP 1K 0.5% 1/10W
R319	1-216-049-00	s	METAL, CHIP 1K 5% 1/10W
R320	1-208-784-11	s	METAL, CHIP 1.2K 0.50% 1/10W
R321	1-216-079-00	s	METAL, CHIP 18K 5% 1/10W
R322	1-216-073-00	s	METAL, CHIP 10K 5% 1/10W
R323	1-216-079-00	s	METAL, CHIP 18K 5% 1/10W
R324	1-216-073-00	s	METAL, CHIP 10K 5% 1/10W
R325	1-216-025-00	s	METAL, CHIP 100 5% 1/10W
R326	1-216-049-00	s	METAL, CHIP 1K 5% 1/10W
R327	1-208-800-11	s	METAL, CHIP 5.6K 0.5% 1/10W
R328	1-216-295-91	s	RES, CHIP 0
R329	1-216-295-91	s	RES, CHIP 0
R330	1-216-089-00	s	METAL, CHIP 47K 5% 1/10W
R331	1-216-069-00	s	METAL, CHIP 6.8K 5% 1/10W
R332	1-216-295-91	s	RES, CHIP 0
R334	1-216-089-00	s	METAL, CHIP 47K 5% 1/10W
R335	1-216-089-00	s	METAL, CHIP 47K 5% 1/10W
R336	1-216-089-00	s	METAL, CHIP 47K 5% 1/10W
R337	1-216-057-00	s	METAL, CHIP 2.2K 5% 1/10W
R338	1-216-025-00	s	METAL, CHIP 100 5% 1/10W
R339	1-216-648-11	s	METAL, CHIP 750 0.5% 1/10W
R340	1-216-657-11	s	METAL, CHIP 1.8K 0.5% 1/10W
R341	1-216-675-11	s	METAL, CHIP 10K 0.5% 1/10W
R342	1-216-667-11	s	METAL, CHIP 4.7K 0.5% 1/10W
R343	1-216-667-11	s	METAL, CHIP 4.7K 0.5% 1/10W
R344	1-216-057-00	s	METAL, CHIP 2.2K 5% 1/10W
R345	1-216-651-11	s	METAL, CHIP 1K 0.5% 1/10W
R346	1-216-049-00	s	METAL, CHIP 1K 5% 1/10W
R347	1-216-675-11	s	METAL, CHIP 10K 0.5% 1/10W
R348	1-216-041-00	s	METAL, CHIP 470 5% 1/10W

(TBC-30A BOARD)

Ref. No. or Q'ty	Part No.	SP	Description
R349	1-216-667-11	s	METAL, CHIP 4.7K 0.5% 1/10W
R350	1-216-667-11	s	METAL, CHIP 4.7K 0.5% 1/10W
R351	1-216-057-00	s	METAL, CHIP 2.2K 5% 1/10W
R352	1-216-651-11	s	METAL, CHIP 1K 0.5% 1/10W
R353	1-216-033-00	s	METAL, CHIP 220 5% 1/10W
R354	1-216-049-00	s	METAL, CHIP 1K 5% 1/10W
R355	1-216-675-11	s	METAL, CHIP 10K 0.5% 1/10W
R356	1-208-774-11	s	METAL, CHIP 470 0.50% 1/10W
R357	1-216-649-11	s	METAL, CHIP 820 0.5% 1/10W
R358	1-216-075-00	s	METAL, CHIP 12K 5% 1/10W
R359	1-216-033-00	s	METAL, CHIP 220 5% 1/10W
R360	1-216-073-00	s	METAL, CHIP 10K 5% 1/10W
R361	1-216-049-00	s	METAL, CHIP 1K 5% 1/10W
R362	1-216-049-00	s	METAL, CHIP 1K 5% 1/10W
R363	1-208-774-11	s	METAL, CHIP 470 0.50% 1/10W
R364	1-216-057-00	s	METAL, CHIP 2.2K 5% 1/10W
R365	1-216-057-00	s	METAL, CHIP 2.2K 5% 1/10W
R366	1-216-041-00	s	METAL, CHIP 470 5% 1/10W
R367	1-216-073-00	s	METAL, CHIP 10K 5% 1/10W
R368	1-216-025-00	s	METAL, CHIP 100 5% 1/10W
R369	1-216-663-11	s	METAL, CHIP 3.3K 0.5% 1/10W
R370	1-216-683-11	s	METAL, CHIP 22K 0.5% 1/10W
R371	1-216-043-91	s	METAL, CHIP 560 5% 1/10W
R372	1-216-077-00	s	METAL, CHIP 15K 5% 1/10W
R373	1-216-073-00	s	METAL, CHIP 10K 5% 1/10W
R374	1-216-057-00	s	METAL, CHIP 2.2K 5% 1/10W
R375	1-216-097-00	s	METAL, CHIP 100K 5% 1/10W
R376	1-216-045-00	s	METAL, CHIP 680 5% 1/10W
R377	1-216-073-00	s	METAL, CHIP 10K 5% 1/10W
R378	1-216-651-11	s	METAL, CHIP 1K 0.5% 1/10W
R379	1-216-665-11	s	METAL, CHIP 3.9K 0.5% 1/10W
R380	1-216-651-11	s	METAL, CHIP 1K 0.5% 1/10W
R381	1-216-089-00	s	METAL, CHIP 47K 5% 1/10W
R382	1-216-117-00	s	METAL, CHIP 680K 5% 1/10W
R383	1-216-097-00	s	METAL, CHIP 100K 5% 1/10W
R384	1-216-097-00	s	METAL, CHIP 100K 5% 1/10W
R385	1-216-057-00	s	METAL, CHIP 2.2K 5% 1/10W
R386	1-216-089-00	s	METAL, CHIP 47K 5% 1/10W
R387	1-216-081-00	s	METAL, CHIP 22K 5% 1/10W
R388	1-216-051-00	s	METAL, CHIP 1.2K 5% 1/10W
R389	1-216-073-00	s	METAL, CHIP 10K 5% 1/10W
R390	1-216-057-00	s	METAL, CHIP 2.2K 5% 1/10W
R391	1-216-073-00	s	METAL, CHIP 10K 5% 1/10W
R392	1-216-073-00	s	METAL, CHIP 10K 5% 1/10W
R393	1-216-073-00	s	METAL, CHIP 10K 5% 1/10W
R394	1-216-073-00	s	METAL, CHIP 10K 5% 1/10W
R395	1-216-037-00	s	METAL, CHIP 330 5% 1/10W
R396	1-216-041-00	s	METAL, CHIP 470 5% 1/10W
R397	1-216-073-00	s	METAL, CHIP 10K 5% 1/10W
R398	1-216-651-11	s	METAL, CHIP 1K 0.5% 1/10W
R399	1-216-049-00	s	METAL, CHIP 1K 5% 1/10W
R400	1-216-651-11	s	METAL, CHIP 1K 0.5% 1/10W
R401	1-216-079-00	s	METAL, CHIP 18K 5% 1/10W
R402	1-216-073-00	s	METAL, CHIP 10K 5% 1/10W
R403	1-216-037-00	s	METAL, CHIP 330 5% 1/10W
R404	1-216-049-00	s	METAL, CHIP 1K 5% 1/10W
R405	1-216-049-00	s	METAL, CHIP 1K 5% 1/10W
R406	1-216-049-00	s	METAL, CHIP 1K 5% 1/10W
R407	1-216-041-00	s	METAL, CHIP 470 5% 1/10W

(TBC-30A BOARD)

Ref. No. or Q'ty	Part No.	SP	Description
R408	1-216-089-00	s	METAL, CHIP 47K 5% 1/10W
R409	1-216-073-00	s	METAL, CHIP 10K 5% 1/10W
R410	1-216-025-00	s	METAL, CHIP 100 5% 1/10W
R411	1-216-049-00	s	METAL, CHIP 1K 5% 1/10W
R412	1-216-025-00	s	METAL, CHIP 100 5% 1/10W
R413-417	1-216-295-91	s	RES, CHIP 0
R418	1-216-061-00	s	METAL, CHIP 3.3K 5% 1/10W
R419	1-216-037-00	s	METAL, CHIP 330 5% 1/10W
R420	1-216-077-00	s	METAL, CHIP 15K 5% 1/10W
R421	1-216-047-00	s	METAL, CHIP 820 5% 1/10W
R422	1-216-057-00	s	METAL, CHIP 2.2K 5% 1/10W
R423	1-216-049-00	s	METAL, CHIP 1K 5% 1/10W
R424	1-216-049-00	s	METAL, CHIP 1K 5% 1/10W
R425	1-216-049-00	s	METAL, CHIP 1K 5% 1/10W
R426	1-216-093-00	s	METAL, CHIP 68K 5% 1/10W
R427	1-216-049-00	s	METAL, CHIP 1K 5% 1/10W
R428	1-216-295-91	s	RES, CHIP 0
R430	1-216-295-91	s	RES, CHIP 0
R431	1-216-295-91	s	RES, CHIP 0
R433	1-216-295-91	s	RES, CHIP 0
R435	1-216-295-91	s	RES, CHIP 0
R437	1-216-295-91	s	RES, CHIP 0
R439	1-216-065-00	s	METAL, CHIP 4.7K 5% 1/10W
R440	1-216-065-00	s	METAL, CHIP 4.7K 5% 1/10W
R468	1-216-067-00	s	METAL, CHIP 5.6K 5% 1/10W
R469	1-216-073-00	s	METAL, CHIP 10K 5% 1/10W
R470	1-216-073-00	s	METAL, CHIP 10K 5% 1/10W
R471	1-216-053-00	s	METAL, CHIP 1.5K 5% 1/10W
R472	1-216-692-11	s	METAL, CHIP 51K 0.5% 1/10W
R473	1-208-789-11	s	METAL, CHIP 2K 0.5% 1/10W
R474	1-208-784-11	s	METAL, CHIP 1.2K 0.50% 1/10W
R475	1-216-648-11	s	METAL, CHIP 750 0.5% 1/10W
R476	1-216-037-00	s	METAL, CHIP 330 5% 1/10W
R477	1-216-671-11	s	METAL, CHIP 6.8K 0.5% 1/10W
R478	1-208-817-11	s	METAL, CHIP 30K 0.50% 1/10W
R479	1-216-638-11	s	METAL, CHIP 300 0.5% 1/10W
R482	1-216-667-11	s	METAL, CHIP 4.7K 0.5% 1/10W
R483	1-216-041-00	s	METAL, CHIP 470 5% 1/10W
R484	1-216-069-00	s	METAL, CHIP 6.8K 5% 1/10W
R485	1-216-081-00	s	METAL, CHIP 22K 5% 1/10W
R486	1-216-067-00	s	METAL, CHIP 5.6K 5% 1/10W
R487	1-216-067-00	s	METAL, CHIP 5.6K 5% 1/10W
R488	1-216-065-00	s	METAL, CHIP 4.7K 5% 1/10W
R490	1-216-073-00	s	METAL, CHIP 10K 5% 1/10W
R492	1-216-117-00	s	METAL, CHIP 680K 5% 1/10W
R493	1-216-105-91	s	METAL, CHIP 220K 5% 1/10W
R494	1-216-049-00	s	METAL, CHIP 1K 5% 1/10W
R495	1-216-085-00	s	METAL, CHIP 33K 5% 1/10W
R496	1-216-053-00	s	METAL, CHIP 1.5K 5% 1/10W
R497	1-216-065-00	s	METAL, CHIP 4.7K 5% 1/10W
R498	1-216-065-00	s	METAL, CHIP 4.7K 5% 1/10W
R499	1-216-073-00	s	METAL, CHIP 10K 5% 1/10W
R500	1-216-692-11	s	METAL, CHIP 51K 0.5% 1/10W
R501	1-208-789-11	s	METAL, CHIP 2K 0.5% 1/10W
R502	1-208-784-11	s	METAL, CHIP 1.2K 0.50% 1/10W
R503	1-216-648-11	s	METAL, CHIP 750 0.5% 1/10W
R504	1-216-037-00	s	METAL, CHIP 330 5% 1/10W
R505	1-216-671-11	s	METAL, CHIP 6.8K 0.5% 1/10W
R506	1-208-817-11	s	METAL, CHIP 30K 0.50% 1/10W

(TBC-30A BOARD)

Ref. No. or Q'ty	Part No.	SP	Description
R507	1-216-638-11	s	METAL, CHIP 300 0.5% 1/10W
R508	1-216-691-11	s	METAL, CHIP 47K 0.5% 1/10W
R509	1-216-041-00	s	METAL, CHIP 470 5% 1/10W
R510	1-216-081-00	s	METAL, CHIP 22K 5% 1/10W
R511	1-216-035-00	s	METAL, CHIP 270 5% 1/10W
R512	1-216-067-00	s	METAL, CHIP 5.6K 5% 1/10W
R514	1-216-097-00	s	METAL, CHIP 100K 5% 1/10W
R515	1-216-117-00	s	METAL, CHIP 680K 5% 1/10W
R516	1-216-073-00	s	METAL, CHIP 10K 5% 1/10W
R517	1-216-073-00	s	METAL, CHIP 10K 5% 1/10W
R518	1-216-081-00	s	METAL, CHIP 22K 5% 1/10W
R519	1-216-041-00	s	METAL, CHIP 470 5% 1/10W
R520	1-216-053-00	s	METAL, CHIP 1.5K 5% 1/10W
R521	1-216-053-00	s	METAL, CHIP 1.5K 5% 1/10W
R522	1-216-089-00	s	METAL, CHIP 47K 5% 1/10W
R523	1-216-073-00	s	METAL, CHIP 10K 5% 1/10W
R524	1-216-692-11	s	METAL, CHIP 51K 0.5% 1/10W
R525	1-208-789-11	s	METAL, CHIP 2K 0.5% 1/10W
R526	1-208-784-11	s	METAL, CHIP 1.2K 0.50% 1/10W
R527	1-216-648-11	s	METAL, CHIP 750 0.5% 1/10W
R528	1-216-638-11	s	METAL, CHIP 300 0.5% 1/10W
R529	1-216-671-11	s	METAL, CHIP 6.8K 0.5% 1/10W
R530	1-208-817-11	s	METAL, CHIP 30K 0.50% 1/10W
R531	1-216-638-11	s	METAL, CHIP 300 0.5% 1/10W
R536	1-216-073-00	s	METAL, CHIP 10K 5% 1/10W
R537	1-216-073-00	s	METAL, CHIP 10K 5% 1/10W
R540	1-216-097-00	s	METAL, CHIP 100K 5% 1/10W
R541	1-216-117-00	s	METAL, CHIP 680K 5% 1/10W
R545	1-216-097-00	s	METAL, CHIP 100K 5% 1/10W
R546	1-216-067-00	s	METAL, CHIP 5.6K 5% 1/10W
R547	1-216-053-00	s	METAL, CHIP 1.5K 5% 1/10W
R548	1-216-057-00	s	METAL, CHIP 2.2K 5% 1/10W
R550	1-216-061-00	s	METAL, CHIP 3.3K 5% 1/10W
R560	1-216-683-11	s	METAL, CHIP 22K 0.5% 1/10W
R601	1-216-055-00	s	METAL, CHIP 1.8K 5% 1/10W
R602	1-216-057-00	s	METAL, CHIP 2.2K 5% 1/10W
R603	1-216-081-00	s	METAL, CHIP 22K 5% 1/10W
R604	1-216-081-00	s	METAL, CHIP 22K 5% 1/10W
R605	1-216-057-00	s	METAL, CHIP 2.2K 5% 1/10W
R606	1-216-121-00	s	METAL, CHIP 1M 5% 1/10W
R607	1-216-049-00	s	METAL, CHIP 1K 5% 1/10W
R608	1-216-095-00	s	METAL, CHIP 82K 5% 1/10W
R609	1-216-121-00	s	METAL, CHIP 1M 5% 1/10W
R610	1-216-121-00	s	METAL, CHIP 1M 5% 1/10W
R611	1-216-097-00	s	METAL, CHIP 100K 5% 1/10W
R612	1-216-073-00	s	METAL, CHIP 10K 5% 1/10W
R613	1-216-085-00	s	METAL, CHIP 33K 5% 1/10W
R614	1-216-651-11	s	METAL, CHIP 1K 0.5% 1/10W
R615	1-216-635-11	s	METAL, CHIP 220 0.5% 1/10W
R616	1-216-651-11	s	METAL, CHIP 1K 0.5% 1/10W
R617	1-216-057-00	s	METAL, CHIP 2.2K 5% 1/10W
R618	1-216-117-00	s	METAL, CHIP 680K 5% 1/10W
R619	1-216-117-00	s	METAL, CHIP 680K 5% 1/10W
R620	1-216-061-00	s	METAL, CHIP 3.3K 5% 1/10W
R621	1-216-061-00	s	METAL, CHIP 3.3K 5% 1/10W
R622	1-216-081-00	s	METAL, CHIP 22K 5% 1/10W
R623	1-216-081-00	s	METAL, CHIP 22K 5% 1/10W
R624	1-216-057-00	s	METAL, CHIP 2.2K 5% 1/10W
R625	1-216-121-00	s	METAL, CHIP 1M 5% 1/10W

(TBC-30A BOARD)

Ref. No. or Q'ty	Part No.	SP	Description
R626	1-216-049-00	s	METAL, CHIP 1K 5% 1/10W
R627	1-216-095-00	s	METAL, CHIP 82K 5% 1/10W
R628	1-216-121-00	s	METAL, CHIP 1M 5% 1/10W
R629	1-216-121-00	s	METAL, CHIP 1M 5% 1/10W
R630	1-216-097-00	s	METAL, CHIP 100K 5% 1/10W
R631	1-216-073-00	s	METAL, CHIP 10K 5% 1/10W
R632	1-216-085-00	s	METAL, CHIP 33K 5% 1/10W
R633	1-216-651-11	s	METAL, CHIP 1K 0.5% 1/10W
R634	1-208-774-11	s	METAL, CHIP 470 0.50% 1/10W
R635	1-216-059-00	s	METAL, CHIP 2.7K 5% 1/10W
R636	1-216-053-00	s	METAL, CHIP 1.5K 5% 1/10W
R637	1-216-651-11	s	METAL, CHIP 1K 0.5% 1/10W
R638	1-216-651-11	s	METAL, CHIP 1K 0.5% 1/10W
R639	1-216-033-00	s	METAL, CHIP 220 5% 1/10W
R641	1-216-057-00	s	METAL, CHIP 2.2K 5% 1/10W
R642	1-216-017-00	s	METAL, CHIP 47 5% 1/10W
R643	1-216-073-00	s	METAL, CHIP 10K 5% 1/10W
R644	1-216-017-00	s	METAL, CHIP 47 5% 1/10W
R645	1-216-061-00	s	METAL, CHIP 3.3K 5% 1/10W
R646	1-216-033-00	s	METAL, CHIP 220 5% 1/10W
R647	1-216-097-00	s	METAL, CHIP 100K 5% 1/10W
R648	1-216-073-00	s	METAL, CHIP 10K 5% 1/10W
R649	1-216-085-00	s	METAL, CHIP 33K 5% 1/10W
R650	1-216-073-00	s	METAL, CHIP 10K 5% 1/10W
R651	1-216-097-00	s	METAL, CHIP 100K 5% 1/10W
R652	1-216-097-00	s	METAL, CHIP 100K 5% 1/10W
R653	1-216-033-00	s	METAL, CHIP 220 5% 1/10W
R654	1-216-638-11	s	METAL, CHIP 300 0.5% 1/10W
RV201	1-241-759-21	s	RES, ADJ METAL 220
RV300	1-241-759-21	s	RES, ADJ METAL 220
RV301	1-241-760-11	s	RES, ADJ CARBON 470
RV302	1-241-760-11	s	RES, ADJ CARBON 470
RV303	1-241-763-11	s	RES, ADJ METAL 4.7k
RV305	1-241-760-11	s	RES, ADJ CARBON 470
RV306	1-241-759-21	s	RES, ADJ METAL 220
RV307	1-241-760-11	s	RES, ADJ CARBON 470
RV308	1-241-763-11	s	RES, ADJ METAL 4.7k
RV400	1-241-763-11	s	RES, ADJ METAL 4.7k
RV402	1-241-783-11	s	RES, ADJ METAL 2.2k
RV601	1-241-761-11	s	RES, ADJ METAL 1k
TH401	1-809-308-21	s	THERMISTOR, CHIP 3.3K
TH601	1-809-308-21	s	THERMISTOR, CHIP 3.3K
W1	1-953-884-11	o	HARNESS (TBC Y)
W2	1-953-885-11	o	HARNESS (TBC C)
X200	1-760-457-11	s	VCO, CRYSTAL 17.734475MHz
X400	1-760-457-11	s	VCO, CRYSTAL 17.734475MHz
X401	1-760-456-11	s	VCO, CRYSTAL 14.1875MHz
X402	1-760-457-11	s	VCO, CRYSTAL 17.734475MHz

DUS-812 BOARD

Ref. No. or Q'ty	Part No.	SP	Description
DUS-812 board is included TBC-30A board.			
1pc	A-8265-896-A	o	MOUNTED CIRCUIT BOARD, DUS-812
C1	1-164-004-11	s	CERAMIC, CHIP 0.1uF 10% 25V
C2	1-164-004-11	s	CERAMIC, CHIP 0.1uF 10% 25V
C3	1-128-400-11	s	ELECT, CHIP 47uF 20% 25V
IC1	8-759-925-90	s	SN74HC74ANS
IC2	8-759-239-23	s	TC74HC86AF
IC3	8-759-925-90	s	SN74HC74ANS
IC4	8-759-239-55	s	TC74HC123AF
L1	1-543-775-11	s	FILTER, EMI
L2	1-408-789-21	s	INDUCTOR CHIP 100uH
R1	1-216-097-00	s	METAL, CHIP 100K 5% 1/10W

VA-148A BOARD(SVO-5800P)

Ref. No. or Q'ty	Part No.	SP	Description
VA-148A board is used for SVO-5800P(EK).			
1pc	A-8265-870-A	o	MOUNTED CIRCUIT BOARD, VA-148A
1pc	3-179-084-01	s	LEVER (R), PC BOARD
1pc	3-179-085-01	s	LEVER (L), PC BOARD
1pc	3-682-482-01	o	CASE(A),VA,SHIELD
1pc	3-682-483-02	o	CASE(B),VA,SHIELD
C1	1-126-964-11	s	ELECT 10uF 20% 50V
C9	1-130-490-11	s	MYLAR 0.039uF 5% 50V
C10	1-130-473-00	s	MYLAR 0.0015uF 5% 50V
C11	1-164-232-11	s	CERAMIC, CHIP 0.01uF 10% 100V
C12	1-130-488-00	s	MYLAR 0.027uF 5% 50V
C13	1-126-964-11	s	ELECT 10uF 20% 50V
C14	1-124-927-11	s	ELECT 4.7uF 20% 100V
C15	1-126-964-11	s	ELECT 10uF 20% 50V
C20	1-126-964-11	s	ELECT 10uF 20% 50V
C21	1-126-933-11	s	ELECT 100uF 20% 16V
C22	1-124-916-11	s	ELECT 22uF 20% 63V
C23	1-124-916-11	s	ELECT 22uF 20% 63V
C24	1-126-933-11	s	ELECT 100uF 20% 16V
C25	1-124-254-00	s	ELECT 0.68uF 20% 50V
C27	1-164-232-11	s	CERAMIC, CHIP 0.01uF 10% 100V
C28	1-126-933-11	s	ELECT 100uF 20% 16V
C29	1-163-038-91	s	CERAMIC, CHIP 0.1uF 25V
C30	1-124-916-11	s	ELECT 22uF 20% 63V
C31	1-163-227-11	s	CERAMIC, CHIP 10PF 5% 50V
C32	1-126-964-11	s	ELECT 10uF 20% 50V
C33	1-164-232-11	s	CERAMIC, CHIP 0.01uF 10% 100V
C34	1-124-927-11	s	ELECT 4.7uF 20% 100V
C35	1-126-964-11	s	ELECT 10uF 20% 50V
C36	1-126-964-11	s	ELECT 10uF 20% 50V
C37	1-124-126-00	s	ELECT 47uF 20% 25V
C38	1-124-239-00	s	ELECT 6.8uF 20% 25V
C39	1-163-275-11	s	CERAMIC, CHIP 0.001uF 5% 50V
C40-C44	1-164-004-11	s	CERAMIC, CHIP 0.1uF 10% 25V
C45	1-126-933-11	s	ELECT 100uF 20% 16V
C100	1-109-982-11	s	CERAMIC, CHIP 1uF 10% 10V
C101	1-163-275-11	s	CERAMIC, CHIP 0.001uF 5% 50V
C102	1-124-927-11	s	ELECT 4.7uF 20% 100V
C103	1-124-126-00	s	ELECT 47uF 20% 25V
C104	1-130-483-00	s	MYLAR 0.01uF 5% 50V
C105	1-163-017-00	s	CERAMIC, CHIP 0.0047uF 5% 50V
C106	1-124-903-11	s	ELECT 1uF 20% 50V
C107	1-163-017-00	s	CERAMIC, CHIP 0.0047uF 5% 50V
C108	1-124-916-11	s	ELECT 22uF 20% 63V
C109	1-126-964-11	s	ELECT 10uF 20% 50V
C110	1-124-927-11	s	ELECT 4.7uF 20% 100V
C111	1-164-182-11	s	CERAMIC, CHIP 3300PF 10% 100V
C112	1-124-927-11	s	ELECT 4.7uF 20% 100V
C113	1-126-933-11	s	ELECT 100uF 20% 16V
C114	1-131-587-11	s	TANTALUM 0.68uF 5% 35V
C115	1-164-489-11	s	CERAMIC, CHIP 0.22uF 10% 16V
C116	1-126-964-11	s	ELECT 10uF 20% 50V
C117	1-130-486-00	s	MYLAR 0.018uF 10% 50V
C118	1-130-475-00	s	MYLAR 0.0022uF 5% 50V
C119	1-124-126-00	s	ELECT 47uF 20% 25V
C120	1-164-004-11	s	CERAMIC, CHIP 0.1uF 10% 25V
C121	1-126-964-11	s	ELECT 10uF 20% 50V
C122	1-136-434-11	s	FILM 120PF 5% 630V

(VA-148A BOARD(SVO-5800P))

Ref. No. or Q'ty	Part No.	SP	Description
C123	1-136-437-11	s	FILM 220PF 5% 630V
C124	1-124-927-11	s	ELECT 4.7uF 20% 100V
C125	1-164-161-11	s	CERAMIC, CHIP 0.0022uF 10% 100V
C126	1-163-143-00	s	CERAMIC, CHIP 0.0012uF 5% 50V
C127	1-163-125-00	s	CERAMIC, CHIP 220PF 5% 50V
C128	1-136-553-11	s	FILM 0.0015uF 10% 630V
C129	1-126-964-11	s	ELECT 10uF 20% 50V
C130	1-124-239-00	s	ELECT 6.8uF 20% 25V
C131	1-126-964-11	s	ELECT 10uF 20% 50V
C132	1-130-483-00	s	MYLAR 0.01uF 5% 50V
C133	1-130-491-00	s	MYLAR 0.047uF 5% 50V
C134	1-126-964-11	s	ELECT 10uF 20% 50V
C135	1-126-964-11	s	ELECT 10uF 20% 50V
C136	1-126-964-11	s	ELECT 10uF 20% 50V
C137	1-130-479-00	s	MYLAR 0.0047uF 5% 50V
C138	1-124-903-11	s	ELECT 1uF 20% 50V
C139	1-163-038-91	s	CERAMIC, CHIP 0.1uF 25V
C200	1-126-111-11	s	ELECT 3.3uF 20% 100V
C201	1-163-275-11	s	CERAMIC, CHIP 0.001uF 5% 50V
C202	1-124-927-11	s	ELECT 4.7uF 20% 100V
C203	1-124-126-00	s	ELECT 47uF 20% 25V
C204	1-130-483-00	s	MYLAR 0.01uF 5% 50V
C205	1-163-017-00	s	CERAMIC, CHIP 0.0047uF 5% 50V
C206	1-124-903-11	s	ELECT 1uF 20% 50V
C207	1-163-017-00	s	CERAMIC, CHIP 0.0047uF 5% 50V
C208	1-124-916-11	s	ELECT 22uF 20% 63V
C209	1-126-964-11	s	ELECT 10uF 20% 50V
C210	1-124-927-11	s	ELECT 4.7uF 20% 100V
C211	1-164-182-11	s	CERAMIC, CHIP 3300PF 10% 100V
C212	1-124-927-11	s	ELECT 4.7uF 20% 100V
C213	1-126-933-11	s	ELECT 100uF 20% 16V
C214	1-131-587-11	s	TANTALUM 0.68uF 5% 35V
C215	1-164-489-11	s	CERAMIC, CHIP 0.22uF 10% 16V
C216	1-126-964-11	s	ELECT 10uF 20% 50V
C217	1-130-486-00	s	MYLAR 0.018uF 10% 50V
C218	1-130-475-00	s	MYLAR 0.0022uF 5% 50V
C219	1-124-126-00	s	ELECT 47uF 20% 25V
C220	1-164-004-11	s	CERAMIC, CHIP 0.1uF 10% 25V
C221	1-126-964-11	s	ELECT 10uF 20% 50V
C222	1-136-434-11	s	FILM 120PF 5% 630V
C223	1-136-437-11	s	FILM 220PF 5% 630V
C224	1-124-927-11	s	ELECT 4.7uF 20% 100V
C225	1-164-161-11	s	CERAMIC, CHIP 0.0022uF 10% 100V
C226	1-163-143-00	s	CERAMIC, CHIP 0.0012uF 5% 50V
C227	1-163-125-00	s	CERAMIC, CHIP 220PF 5% 50V
C228	1-136-553-11	s	FILM 0.0015uF 10% 630V
C229	1-126-964-11	s	ELECT 10uF 20% 50V
C230	1-124-239-00	s	ELECT 6.8uF 20% 25V
C231	1-126-964-11	s	ELECT 10uF 20% 50V
C232	1-130-483-00	s	MYLAR 0.01uF 5% 50V
C233	1-130-491-00	s	MYLAR 0.047uF 5% 50V
C234	1-126-964-11	s	ELECT 10uF 20% 50V
C235	1-124-239-00	s	ELECT 6.8uF 20% 25V
C236	1-126-964-11	s	ELECT 10uF 20% 50V
C237	1-130-479-00	s	MYLAR 0.0047uF 5% 50V
C238	1-163-038-91	s	CERAMIC, CHIP 0.1uF 25V
C239	1-124-903-11	s	ELECT 1uF 20% 50V
C301	1-126-111-11	s	ELECT 3.3uF 20% 100V
C302	1-130-473-00	s	MYLAR 0.0015uF 5% 50V

(VA-148A BOARD(SVO-5800P))

Ref. No. or Q'ty	Part No.	SP	Description
C303	1-126-964-11	s	ELECT 10uF 20% 50V
C304	1-126-964-11	s	ELECT 10uF 20% 50V
C305	1-124-927-11	s	ELECT 4.7uF 20% 100V
C306	1-130-487-00	s	MYLAR 0.022uF 5% 50V
C307	1-124-126-00	s	ELECT 47uF 20% 25V
C308	1-130-483-00	s	MYLAR 0.01uF 5% 50V
C309	1-130-477-00	s	MYLAR 0.0033uF 5% 50V
C310	1-163-135-00	s	CERAMIC, CHIP 560PF 5% 50V
C311	1-163-137-00	s	CERAMIC, CHIP 680PF 5% 50V
C312	1-163-135-00	s	CERAMIC, CHIP 560PF 5% 50V
C313	1-126-111-11	s	ELECT 3.3uF 20% 100V
C314	1-124-916-11	s	ELECT 22uF 20% 63V
C315	1-164-004-11	s	CERAMIC, CHIP 0.1uF 10% 25V
C316	1-164-004-11	s	CERAMIC, CHIP 0.1uF 10% 25V
C319	1-124-126-00	s	ELECT 47uF 20% 25V
C320	1-126-964-11	s	ELECT 10uF 20% 50V
C401	1-126-111-11	s	ELECT 3.3uF 20% 100V
C402	1-130-473-00	s	MYLAR 0.0015uF 5% 50V
C403	1-126-964-11	s	ELECT 10uF 20% 50V
C404	1-126-964-11	s	ELECT 10uF 20% 50V
C405	1-124-927-11	s	ELECT 4.7uF 20% 100V
C406	1-130-487-00	s	MYLAR 0.022uF 5% 50V
C407	1-124-126-00	s	ELECT 47uF 20% 25V
C408	1-130-483-00	s	MYLAR 0.01uF 5% 50V
C409	1-130-477-00	s	MYLAR 0.0033uF 5% 50V
C410	1-163-135-00	s	CERAMIC, CHIP 560PF 5% 50V
C411	1-163-137-00	s	CERAMIC, CHIP 680PF 5% 50V
C412	1-163-135-00	s	CERAMIC, CHIP 560PF 5% 50V
C413	1-126-111-11	s	ELECT 3.3uF 20% 100V
C414	1-124-916-11	s	ELECT 22uF 20% 63V
C415	1-164-004-11	s	CERAMIC, CHIP 0.1uF 10% 25V
C418	1-163-243-11	s	CERAMIC, CHIP 47PF 5% 50V
C419	1-124-126-00	s	ELECT 47uF 20% 25V
C420	1-126-964-11	s	ELECT 10uF 20% 50V
C501	1-163-809-11	s	CERAMIC, CHIP 0.047uF 10% 25V
C502	1-126-933-11	s	ELECT 100uF 20% 16V
C503	1-163-809-11	s	CERAMIC, CHIP 0.047uF 10% 25V
C504	1-126-933-11	s	ELECT 100uF 20% 16V
C505	1-163-809-11	s	CERAMIC, CHIP 0.047uF 10% 25V
C506	1-126-933-11	s	ELECT 100uF 20% 16V
C507	1-163-809-11	s	CERAMIC, CHIP 0.047uF 10% 25V
C508	1-126-933-11	s	ELECT 100uF 20% 16V
C509	1-163-809-11	s	CERAMIC, CHIP 0.047uF 10% 25V
C510	1-126-933-11	s	ELECT 100uF 20% 16V
C511	1-163-809-11	s	CERAMIC, CHIP 0.047uF 10% 25V
C512	1-126-933-11	s	ELECT 100uF 20% 16V
C513	1-163-809-11	s	CERAMIC, CHIP 0.047uF 10% 25V
C514	1-126-933-11	s	ELECT 100uF 20% 16V
C521	1-124-126-00	s	ELECT 47uF 20% 25V
C522	1-124-126-00	s	ELECT 47uF 20% 25V
C523	1-124-126-00	s	ELECT 47uF 20% 25V
C524	1-124-126-00	s	ELECT 47uF 20% 25V
C525	1-163-809-11	s	CERAMIC, CHIP 0.047uF 10% 25V
C526	1-163-809-11	s	CERAMIC, CHIP 0.047uF 10% 25V
C528	1-163-091-00	s	CERAMIC, CHIP 8PF 50V
C529	1-163-037-11	s	CERAMIC, CHIP 0.022uF 10% 25V
C530	1-163-037-11	s	CERAMIC, CHIP 0.022uF 10% 25V
C531	1-163-037-11	s	CERAMIC, CHIP 0.022uF 10% 25V
C532	1-163-809-11	s	CERAMIC, CHIP 0.047uF 10% 25V

(VA-148A BOARD(SVO-5800P))

Ref. No. or Q'ty	Part No.	SP	Description
C533	1-124-126-00	s	ELECT 47uF 20% 25V
C534	1-126-964-11	s	ELECT 10uF 20% 50V
C535	1-163-809-11	s	CERAMIC, CHIP 0.047uF 10% 25V
C536	1-126-933-11	s	ELECT 100uF 20% 16V
C537	1-163-251-11	s	CERAMIC, CHIP 100PF 5% 50V
C538	1-107-823-11	s	CERAMIC, CHIP 0.47uF 10% 16V
C539	1-163-038-91	s	CERAMIC, CHIP 0.1uF 25V
C540	1-104-663-11	s	ELECT 33uF 20% 25V
C541	1-164-232-11	s	CERAMIC, CHIP 0.01uF 10% 100V
C542	1-109-982-11	s	CERAMIC, CHIP 1uF 10% 10V
C543	1-163-020-00	s	CERAMIC, CHIP 0.0082uF 10% 50V
C544	1-163-809-11	s	CERAMIC, CHIP 0.047uF 10% 25V
C545	1-126-933-11	s	ELECT 100uF 20% 16V
C551	1-124-126-00	s	ELECT 47uF 20% 25V
C552	1-163-809-11	s	CERAMIC, CHIP 0.047uF 10% 25V
C553	1-163-125-00	s	CERAMIC, CHIP 220PF 5% 50V
C554	1-164-004-11	s	CERAMIC, CHIP 0.1uF 10% 25V
C555	1-163-131-00	s	CERAMIC, CHIP 390PF 5% 50V
C556	1-163-253-11	s	CERAMIC, CHIP 120PF 5% 50V
C557	1-163-809-11	s	CERAMIC, CHIP 0.047uF 10% 25V
C559	1-124-126-00	s	ELECT 47uF 20% 25V
C560	1-163-809-11	s	CERAMIC, CHIP 0.047uF 10% 25V
C561	1-126-933-11	s	ELECT 100uF 20% 16V
C571	1-124-126-00	s	ELECT 47uF 20% 25V
C572	1-126-933-11	s	ELECT 100uF 20% 16V
C573	1-124-126-00	s	ELECT 47uF 20% 25V
C574	1-163-222-11	s	CERAMIC, CHIP 5PF 50V
C581	1-163-245-11	s	CERAMIC, CHIP 56PF 5% 50V
C582	1-163-038-91	s	CERAMIC, CHIP 0.1uF 25V
C583	1-163-038-91	s	CERAMIC, CHIP 0.1uF 25V
C584	1-124-126-00	s	ELECT 47uF 20% 25V
C585	1-163-037-11	s	CERAMIC, CHIP 0.022uF 10% 25V
C586	1-163-809-11	s	CERAMIC, CHIP 0.047uF 10% 25V
C587	1-126-933-11	s	ELECT 100uF 20% 16V
C588	1-163-037-11	s	CERAMIC, CHIP 0.022uF 10% 25V
C589	1-163-037-11	s	CERAMIC, CHIP 0.022uF 10% 25V
C590	1-163-809-11	s	CERAMIC, CHIP 0.047uF 10% 25V
C591	1-126-933-11	s	ELECT 100uF 20% 16V
C592	1-163-809-11	s	CERAMIC, CHIP 0.047uF 10% 25V
C593	1-126-933-11	s	ELECT 100uF 20% 16V
C602	1-163-037-11	s	CERAMIC, CHIP 0.022uF 10% 25V
C603	1-124-927-11	s	ELECT 4.7uF 20% 100V
C604	1-163-133-00	s	CERAMIC, CHIP 470PF 5% 50V
C605	1-126-933-11	s	ELECT 100uF 20% 16V
C606	1-126-933-11	s	ELECT 100uF 20% 16V
C607	1-163-809-11	s	CERAMIC, CHIP 0.047uF 10% 25V
C608	1-163-809-11	s	CERAMIC, CHIP 0.047uF 10% 25V
C609	1-163-038-91	s	CERAMIC, CHIP 0.1uF 25V
C610	1-163-038-91	s	CERAMIC, CHIP 0.1uF 25V
C611	1-163-038-91	s	CERAMIC, CHIP 0.1uF 25V
C612	1-163-038-91	s	CERAMIC, CHIP 0.1uF 25V
C613	1-163-809-11	s	CERAMIC, CHIP 0.047uF 10% 25V
C614	1-163-038-91	s	CERAMIC, CHIP 0.1uF 25V
C615	1-163-038-91	s	CERAMIC, CHIP 0.1uF 25V
C616	1-163-809-11	s	CERAMIC, CHIP 0.047uF 10% 25V
C617	1-126-933-11	s	ELECT 100uF 20% 16V
C618	1-126-933-11	s	ELECT 100uF 20% 16V
C619	1-163-038-91	s	CERAMIC, CHIP 0.1uF 25V
C620	1-163-038-91	s	CERAMIC, CHIP 0.1uF 25V

(VA-148A BOARD(SVO-5800P))

Ref. No. or Q'ty	Part No.	SP	Description
C621	1-164-232-11	s	CERAMIC, CHIP 0.01uF 10% 100V
C622	1-163-222-11	s	CERAMIC, CHIP 5PF 50V
C623	1-163-097-00	s	CERAMIC, CHIP 15PF 5% 50V
C624	1-163-237-11	s	CERAMIC, CHIP 27PF 5% 50V
C625	1-163-239-11	s	CERAMIC, CHIP 33PF 5% 50V
C626	1-163-235-11	s	CERAMIC, CHIP 22PF 5% 50V
C631	1-163-809-11	s	CERAMIC, CHIP 0.047uF 10% 25V
C632	1-126-933-11	s	ELECT 100uF 20% 16V
C633	1-124-126-00	s	ELECT 47uF 20% 25V
C634	1-124-126-00	s	ELECT 47uF 20% 25V
C636	1-163-809-11	s	CERAMIC, CHIP 0.047uF 10% 25V
C637	1-163-243-11	s	CERAMIC, CHIP 47PF 5% 50V
C638	1-163-239-11	s	CERAMIC, CHIP 33PF 5% 50V
C639	1-124-916-11	s	ELECT 22uF 20% 63V
C640	1-124-126-00	s	ELECT 47uF 20% 25V
C641	1-164-161-11	s	CERAMIC, CHIP 0.0022uF 10% 100V
C642	1-126-933-11	s	ELECT 100uF 20% 16V
C643	1-163-809-11	s	CERAMIC, CHIP 0.047uF 10% 25V
C644	1-163-091-00	s	CERAMIC, CHIP 8PF 50V
C645	1-163-245-11	s	CERAMIC, CHIP 56PF 5% 50V
C646	1-124-126-00	s	ELECT 47uF 20% 25V
C647	1-163-241-11	s	CERAMIC, CHIP 39PF 5% 50V
C648	1-163-139-00	s	CERAMIC, CHIP 820PF 5% 50V
C650	1-124-916-11	s	ELECT 22uF 20% 63V
C670	1-163-037-11	s	CERAMIC, CHIP 0.022uF 10% 25V
C671	1-163-037-11	s	CERAMIC, CHIP 0.022uF 10% 25V
C672	1-163-037-11	s	CERAMIC, CHIP 0.022uF 10% 25V
C674	1-163-809-11	s	CERAMIC, CHIP 0.047uF 10% 25V
C675	1-163-091-00	s	CERAMIC, CHIP 8PF 50V
C676	1-163-251-11	s	CERAMIC, CHIP 100PF 5% 50V
C677	1-163-251-11	s	CERAMIC, CHIP 100PF 5% 50V
C678	1-163-037-11	s	CERAMIC, CHIP 0.022uF 10% 25V
C679	1-163-037-11	s	CERAMIC, CHIP 0.022uF 10% 25V
C681	1-163-235-11	s	CERAMIC, CHIP 22PF 5% 50V
C682	1-163-139-00	s	CERAMIC, CHIP 820PF 5% 50V
C683	1-163-038-91	s	CERAMIC, CHIP 0.1uF 25V
C684	1-163-121-00	s	CERAMIC, CHIP 150PF 5% 50V
C685	1-163-038-91	s	CERAMIC, CHIP 0.1uF 25V
C701	1-126-933-11	s	ELECT 100uF 20% 16V
C702	1-163-809-11	s	CERAMIC, CHIP 0.047uF 10% 25V
C703	1-124-126-00	s	ELECT 47uF 20% 25V
C704	1-163-037-11	s	CERAMIC, CHIP 0.022uF 10% 25V
C705	1-131-377-00	s	TANTALUM 10uF 10% 10V
C706	1-126-933-11	s	ELECT 100uF 20% 16V
C707	1-163-037-11	s	CERAMIC, CHIP 0.022uF 10% 25V
C708	1-164-489-11	s	CERAMIC, CHIP 0.22uF 10% 16V
C709	1-163-037-11	s	CERAMIC, CHIP 0.022uF 10% 25V
C710	1-163-037-11	s	CERAMIC, CHIP 0.022uF 10% 25V
C712	1-164-489-11	s	CERAMIC, CHIP 0.22uF 10% 16V
C713	1-164-489-11	s	CERAMIC, CHIP 0.22uF 10% 16V
C714	1-163-227-11	s	CERAMIC, CHIP 10PF 5% 50V
C715	1-163-108-00	s	CERAMIC, CHIP 43PF 5% 50V
C717	1-163-037-11	s	CERAMIC, CHIP 0.022uF 10% 25V
C718	1-163-037-11	s	CERAMIC, CHIP 0.022uF 10% 25V
C719	1-163-037-11	s	CERAMIC, CHIP 0.022uF 10% 25V
C720	1-163-809-11	s	CERAMIC, CHIP 0.047uF 10% 25V
C741	1-124-126-00	s	ELECT 47uF 20% 25V
C742	1-164-489-11	s	CERAMIC, CHIP 0.22uF 10% 16V
C743	1-126-933-11	s	ELECT 100uF 20% 16V

(VA-148A BOARD(SVO-5800P))

Ref. No. or Q'ty	Part No.	SP	Description
C744	1-126-933-11	s	ELECT 100uF 20% 16V
C746	1-163-809-11	s	CERAMIC, CHIP 0.047uF 10% 25V
C747	1-126-933-11	s	ELECT 100uF 20% 16V
C748	1-124-126-00	s	ELECT 47uF 20% 25V
C749	1-163-037-11	s	CERAMIC, CHIP 0.022uF 10% 25V
C750	1-163-133-00	s	CERAMIC, CHIP 470PF 5% 50V
C752	1-126-933-11	s	ELECT 100uF 20% 16V
C771	1-163-037-11	s	CERAMIC, CHIP 0.022uF 10% 25V
C772	1-163-037-11	s	CERAMIC, CHIP 0.022uF 10% 25V
C773	1-163-038-91	s	CERAMIC, CHIP 0.1uF 25V
C774	1-163-037-11	s	CERAMIC, CHIP 0.022uF 10% 25V
C776	1-163-809-11	s	CERAMIC, CHIP 0.047uF 10% 25V
C777	1-163-037-11	s	CERAMIC, CHIP 0.022uF 10% 25V
C778	1-124-126-00	s	ELECT 47uF 20% 25V
C779	1-163-037-11	s	CERAMIC, CHIP 0.022uF 10% 25V
C781	1-164-004-11	s	CERAMIC, CHIP 0.1uF 10% 25V
C782	1-164-004-11	s	CERAMIC, CHIP 0.1uF 10% 25V
C808	1-126-964-11	s	ELECT 10uF 20% 50V
C818	1-163-243-11	s	CERAMIC, CHIP 47PF 5% 50V
C831	1-126-933-11	s	ELECT 100uF 20% 16V
C832	1-163-809-11	s	CERAMIC, CHIP 0.047uF 10% 25V
C833	1-163-037-11	s	CERAMIC, CHIP 0.022uF 10% 25V
C834	1-163-037-11	s	CERAMIC, CHIP 0.022uF 10% 25V
C835	1-163-809-11	s	CERAMIC, CHIP 0.047uF 10% 25V
C836	1-124-126-00	s	ELECT 47uF 20% 25V
C837	1-126-111-11	s	ELECT 3.3uF 20% 100V
C838	1-124-927-11	s	ELECT 4.7uF 20% 100V
C839	1-126-933-11	s	ELECT 100uF 20% 16V
C840	1-126-933-11	s	ELECT 100uF 20% 16V
C841	1-163-235-11	s	CERAMIC, CHIP 22PF 5% 50V
C842	1-126-964-11	s	ELECT 10uF 20% 50V
C843	1-124-927-11	s	ELECT 4.7uF 20% 100V
C844	1-163-037-11	s	CERAMIC, CHIP 0.022uF 10% 25V
C845	1-163-037-11	s	CERAMIC, CHIP 0.022uF 10% 25V
C846	1-126-933-11	s	ELECT 100uF 20% 16V
C847	1-163-237-11	s	CERAMIC, CHIP 27PF 5% 50V
C848	1-164-232-11	s	CERAMIC, CHIP 0.01uF 10% 100V
C849	1-107-823-11	s	CERAMIC, CHIP 0.47uF 10% 16V
C850	1-163-235-11	s	CERAMIC, CHIP 22PF 5% 50V
C851	1-163-037-11	s	CERAMIC, CHIP 0.022uF 10% 25V
C852	1-163-019-00	s	CERAMIC, CHIP 0.0068uF 10% 50V
C853	1-109-982-11	s	CERAMIC, CHIP 1uF 10% 10V
C854	1-109-982-11	s	CERAMIC, CHIP 1uF 10% 10V
C855	1-163-125-00	s	CERAMIC, CHIP 220PF 5% 50V
C856	1-164-232-11	s	CERAMIC, CHIP 0.01uF 10% 100V
C901	1-124-126-00	s	ELECT 47uF 20% 25V
C902	1-163-037-11	s	CERAMIC, CHIP 0.022uF 10% 25V
C903	1-126-934-11	s	ELECT 220uF 20% 16V
C904	1-163-809-11	s	CERAMIC, CHIP 0.047uF 10% 25V
C905	1-126-934-11	s	ELECT 220uF 20% 16V
C906	1-163-087-00	s	CERAMIC, CHIP 4PF 50V
C907	1-163-809-11	s	CERAMIC, CHIP 0.047uF 10% 25V
C908	1-163-087-00	s	CERAMIC, CHIP 4PF 50V
C909	1-124-126-00	s	ELECT 47uF 20% 25V
C910	1-126-964-11	s	ELECT 10uF 20% 50V
C911	1-124-126-00	s	ELECT 47uF 20% 25V
C912	1-126-933-11	s	ELECT 100uF 20% 16V
C913	1-126-933-11	s	ELECT 100uF 20% 16V
C914	1-163-809-11	s	CERAMIC, CHIP 0.047uF 10% 25V

(VA-148A BOARD(SVO-5800P))

Ref. No. or Q'ty	Part No.	SP	Description
C915	1-163-809-11	s	CERAMIC, CHIP 0.047uF 10% 25V
C918	1-124-126-00	s	ELECT 47uF 20% 25V
C919	1-163-037-11	s	CERAMIC, CHIP 0.022uF 10% 25V
C920	1-126-964-11	s	ELECT 10uF 20% 50V
CN1	1-564-002-41	s	CONNECTOR 3P, MALE
CN2	1-506-468-11	s	CONNECTOR 3P, MALE
CN3	1-506-469-11	s	CONNECTOR 4P, MALE
CN4	1-564-019-41	o	CONNECTOR 9P, MALE
CN501	1-766-793-11	o	CONNECTOR, DIN 64P, MALE
CN502	1-766-793-11	o	CONNECTOR, DIN 64P, MALE
CV841	1-141-424-11	s	CAP, TRIMMER, CHIP 30pF
D3	8-719-157-20	s	DIODE RD4.3M-T1B
D4	8-719-021-31	s	DIODE UZM5.1B
D5	8-719-157-33	s	DIODE RD6.2M-T1B
D6	8-719-801-78	s	DIODE 1S2837-T1
D7	8-719-801-78	s	DIODE 1S2837-T1
D8	8-719-800-76	s	DIODE 1SS226
D9	8-719-801-78	s	DIODE 1S2837-T1
D10	8-719-801-78	s	DIODE 1S2837-T1
D11	8-719-801-78	s	DIODE 1S2837-T1
D12	8-719-104-34	s	DIODE 1S2835
D14	8-719-801-78	s	DIODE 1S2837-T1
D101	8-719-801-78	s	DIODE 1S2837-T1
D102	8-719-157-20	s	DIODE RD4.3M-T1B
D103	8-719-157-20	s	DIODE RD4.3M-T1B
D104	8-719-801-78	s	DIODE 1S2837-T1
D105	8-719-801-78	s	DIODE 1S2837-T1
D106	8-719-801-78	s	DIODE 1S2837-T1
D201	8-719-801-78	s	DIODE 1S2837-T1
D202	8-719-157-20	s	DIODE RD4.3M-T1B
D203	8-719-157-20	s	DIODE RD4.3M-T1B
D204	8-719-801-78	s	DIODE 1S2837-T1
D205	8-719-801-78	s	DIODE 1S2837-T1
D206	8-719-801-78	s	DIODE 1S2837-T1
D521	8-719-801-78	s	DIODE 1S2837-T1
D671	8-719-801-78	s	DIODE 1S2837-T1
D741	8-719-018-80	s	DIODE ND411G-2-T1
D742	8-719-018-80	s	DIODE ND411G-2-T1
D771	8-719-018-80	s	DIODE ND411G-2-T1
D772	8-719-018-80	s	DIODE ND411G-2-T1
D831	8-719-800-76	s	DIODE 1SS226
D832	8-719-801-78	s	DIODE 1S2837-T1
D841	8-719-801-78	s	DIODE 1S2837-T1
FL101	1-239-008-11	s	FILTER, LOW-PASS 13KHz
FL201	1-239-008-11	s	FILTER, LOW-PASS 13KHz
FL551	1-239-085-11	s	FILTER, LOW-PASS 5MHz
FL631	1-239-085-11	s	FILTER, LOW-PASS 5MHz
FL671	1-239-976-11	s	FILTER, BAND-PASS 4.43MHz
IC3	8-759-160-54	s	IC XLH7772KS-VP
IC4	8-759-711-82	s	IC NJM4580E(T2)
IC5	8-759-300-71	s	IC HD14053BFP
IC6	8-759-009-06	s	IC MC14052BF
IC7	8-759-700-43	s	IC NJM4558M
IC8	8-759-068-03	s	IC NJM79L09UA(TE1)
IC9	8-759-700-43	s	IC NJM4558M
IC101	8-759-805-20	s	IC LA7297
IC102	8-752-032-14	s	IC CXA1102M-T4

(VA-148A BOARD(SVO-5800P))

Ref. No. or Q'ty	Part No.	SP	Description
IC103	8-759-603-27	s	IC M5201FP
IC201	8-759-805-20	s	IC LA7297
IC202	8-752-032-14	s	IC CXA1102M-T4
IC203	8-759-603-27	s	IC M5201FP
IC301	8-759-603-27	s	IC M5201FP
IC302	8-759-700-43	s	IC NJM4558M
IC401	8-759-603-27	s	IC M5201FP
IC501	8-759-182-84	s	IC PQ05SZ5U
IC502	8-759-172-41	s	IC L78M09T-TL
IC503	8-759-822-95	s	IC L79M05T-FA
IC504	8-759-172-41	s	IC L78M09T-TL
IC521	8-759-710-07	s	IC NJM2234M
IC522	8-759-710-86	s	IC NJM2233BM-T1
IC523	8-759-710-86	s	IC NJM2233BM-T1
IC524	8-759-285-15	s	IC TA8664P
IC525	8-759-234-20	s	IC TC7S08F
IC551	8-759-201-47	s	IC TA7357AP
IC581	8-752-337-04	s	IC CXD1176Q
IC601	8-752-342-61	s	IC CXD2105AQ
IC631	8-759-710-86	s	IC NJM2233BM-T1
IC632	8-759-011-65	s	IC MC74HC4053F
IC633	8-759-906-53	s	IC TL062CPS
IC634	8-759-238-87	s	IC TC4S66F(TE85R)
IC671	8-759-710-07	s	IC NJM2234M
IC672	8-759-239-58	s	IC TC74HC221AF
IC674	8-759-239-58	s	IC TC74HC221AF
IC675	8-759-234-20	s	IC TC7S08F
IC701	8-752-039-13	s	IC CXA1413L
IC831	8-759-710-07	s	IC NJM2234M
IC832	8-759-256-44	s	IC NJM2235M-TE2
IC833	8-759-285-16	s	IC LC74760M-9070-TLM
IC901	8-759-262-03	s	IC MC14577CFEL
IC902	8-759-262-00	s	IC MC14576CFEL
IC903	8-759-262-00	s	IC MC14576CFEL
L2	1-410-482-31	s	INDUCTOR 100uH
L11	1-410-482-31	s	INDUCTOR 100uH
L12	1-410-482-31	s	INDUCTOR 100uH
L13	1-410-482-31	s	INDUCTOR 100uH
L101	1-410-091-31	s	INDUCTOR 22mH
L102	1-412-451-21	s	INDUCTOR 8.2mH
L103	1-410-482-31	s	INDUCTOR 100uH
L104	1-410-482-31	s	INDUCTOR 100uH
L201	1-410-091-31	s	INDUCTOR 22mH
L202	1-412-451-21	s	INDUCTOR 8.2mH
L203	1-410-482-31	s	INDUCTOR 100uH
L204	1-410-482-31	s	INDUCTOR 100uH
L522	1-410-482-31	s	INDUCTOR 100uH
L551	1-410-482-31	s	INDUCTOR 100uH
L582	1-410-482-31	s	INDUCTOR 100uH
L583	1-410-482-31	s	INDUCTOR 100uH
L584	1-412-390-21	s	INDUCTOR CHIP 0uH
L601	1-408-414-00	s	INDUCTOR 27uH
L602	1-410-482-31	s	INDUCTOR 100uH
L603	1-408-413-00	s	INDUCTOR 22uH
L604-608	1-412-390-21	s	INDUCTOR CHIP 0uH
L631	1-410-482-31	s	INDUCTOR 100uH
L632	1-408-414-00	s	INDUCTOR 27uH
L634	1-408-424-00	s	INDUCTOR 180uH
L641	1-410-482-31	s	INDUCTOR 100uH

(VA-148A BOARD(SVO-5800P))

Ref. No. or Q'ty	Part No.	SP	Description
L671	1-410-470-11	s	INDUCTOR 10uH
L701	1-410-482-31	s	INDUCTOR 100uH
L702	1-410-471-11	s	INDUCTOR 12uH
L703	1-408-414-00	s	INDUCTOR 27uH
L741	1-410-478-11	s	INDUCTOR 47uH
L771	1-410-470-11	s	INDUCTOR 10uH
L831	1-410-482-31	s	INDUCTOR 100uH
L841	1-408-406-00	s	INDUCTOR 5.6uH
L901	1-410-482-31	s	INDUCTOR 100uH
L902	1-410-482-31	s	INDUCTOR 100uH
L903	1-410-482-31	s	INDUCTOR 100uH
L904	1-410-482-31	s	INDUCTOR 100uH
Q1	8-729-202-38	s	TRANSISTOR 2SC3326N
Q2	8-729-901-06	s	TRANSISTOR DTA144EK
Q3	8-729-901-01	s	TRANSISTOR DTC144EK
Q4	8-729-202-38	s	TRANSISTOR 2SC3326N
Q5	8-729-901-06	s	TRANSISTOR DTA144EK
Q6	8-729-901-06	s	TRANSISTOR DTA144EK
Q7	8-729-901-01	s	TRANSISTOR DTC144EK
Q10	8-729-106-68	s	TRANSISTOR 2SC1615A-GP
Q11	8-729-106-68	s	TRANSISTOR 2SC1615A-GP
Q12	8-729-216-22	s	TRANSISTOR 2SA1162
Q13	8-729-230-49	s	TRANSISTOR 2SC2712-YG
Q14	8-729-901-01	s	TRANSISTOR DTC144EK
Q15	8-729-202-38	s	TRANSISTOR 2SC3326N
Q16	8-729-202-38	s	TRANSISTOR 2SC3326N
Q17	8-729-901-01	s	TRANSISTOR DTC144EK
Q18	8-729-901-01	s	TRANSISTOR DTC144EK
Q19	8-729-901-01	s	TRANSISTOR DTC144EK
Q20	8-729-320-60	s	TRANSISTOR 2SD788-34
Q21	8-729-140-93	s	TRANSISTOR 2SB733-34
Q22	8-729-230-49	s	TRANSISTOR 2SC2712-YG
Q23	8-729-216-22	s	TRANSISTOR 2SA1162
Q24	8-729-901-06	s	TRANSISTOR DTA144EK
Q25	8-729-901-01	s	TRANSISTOR DTC144EK
Q26	8-729-901-01	s	TRANSISTOR DTC144EK
Q27	8-729-230-49	s	TRANSISTOR 2SC2712-YG
Q101	8-729-901-01	s	TRANSISTOR DTC144EK
Q102	8-729-230-49	s	TRANSISTOR 2SC2712-YG
Q103	8-729-920-48	s	TRANSISTOR IMH2-T110
Q104	8-729-901-01	s	TRANSISTOR DTC144EK
Q105	8-729-901-01	s	TRANSISTOR DTC144EK
Q106	8-729-920-48	s	TRANSISTOR IMH2-T110
Q107	8-729-230-49	s	TRANSISTOR 2SC2712-YG
Q108	8-729-900-89	s	TRANSISTOR DTC144ES
Q109	8-729-230-49	s	TRANSISTOR 2SC2712-YG
Q110	8-729-106-68	s	TRANSISTOR 2SC1615A-GP
Q111	8-729-106-68	s	TRANSISTOR 2SC1615A-GP
Q112	8-729-216-22	s	TRANSISTOR 2SA1162
Q113	8-729-230-49	s	TRANSISTOR 2SC2712-YG
Q114	8-729-901-01	s	TRANSISTOR DTC144EK
Q115	8-729-106-68	s	TRANSISTOR 2SC1615A-GP
Q116	8-729-106-68	s	TRANSISTOR 2SC1615A-GP
Q117	8-729-901-06	s	TRANSISTOR DTA144EK
Q118	8-729-106-68	s	TRANSISTOR 2SC1615A-GP
Q119	8-729-106-68	s	TRANSISTOR 2SC1615A-GP
Q120	8-729-216-22	s	TRANSISTOR 2SA1162
Q121	8-729-230-49	s	TRANSISTOR 2SC2712-YG

(VA-148A BOARD(SVO-5800P))

Ref. No. or Q'ty	Part No.	SP	Description
Q122	8-729-901-01	s	TRANSISTOR DTC144EK
Q123	8-729-216-22	s	TRANSISTOR 2SA1162
Q124	8-729-216-22	s	TRANSISTOR 2SA1162
Q125	8-729-900-89	s	TRANSISTOR DTC144ES
Q201	8-729-901-01	s	TRANSISTOR DTC144EK
Q202	8-729-230-49	s	TRANSISTOR 2SC2712-YG
Q203	8-729-920-48	s	TRANSISTOR IMH2-T110
Q204	8-729-901-01	s	TRANSISTOR DTC144EK
Q205	8-729-901-01	s	TRANSISTOR DTC144EK
Q206	8-729-920-48	s	TRANSISTOR IMH2-T110
Q207	8-729-901-01	s	TRANSISTOR DTC144EK
Q208	8-729-900-89	s	TRANSISTOR DTC144ES
Q209	8-729-230-49	s	TRANSISTOR 2SC2712-YG
Q210	8-729-106-68	s	TRANSISTOR 2SC1615A-GP
Q211	8-729-106-68	s	TRANSISTOR 2SC1615A-GP
Q212	8-729-216-22	s	TRANSISTOR 2SA1162
Q213	8-729-230-49	s	TRANSISTOR 2SC2712-YG
Q214	8-729-901-01	s	TRANSISTOR DTC144EK
Q215	8-729-106-68	s	TRANSISTOR 2SC1615A-GP
Q216	8-729-106-68	s	TRANSISTOR 2SC1615A-GP
Q217	8-729-901-06	s	TRANSISTOR DTA144EK
Q218	8-729-106-68	s	TRANSISTOR 2SC1615A-GP
Q219	8-729-106-68	s	TRANSISTOR 2SC1615A-GP
Q220	8-729-216-22	s	TRANSISTOR 2SA1162
Q221	8-729-230-49	s	TRANSISTOR 2SC2712-YG
Q222	8-729-901-01	s	TRANSISTOR DTC144EK
Q223	8-729-900-89	s	TRANSISTOR DTC144ES
Q224	8-729-216-22	s	TRANSISTOR 2SA1162
Q225	8-729-216-22	s	TRANSISTOR 2SA1162
Q226	8-729-230-49	s	TRANSISTOR 2SC2712-YG
Q302	8-729-202-38	s	TRANSISTOR 2SC3326N
Q303	8-729-907-26	s	TRANSISTOR IMX1
Q304	8-729-907-26	s	TRANSISTOR IMX1
Q402	8-729-202-38	s	TRANSISTOR 2SC3326N
Q521	8-729-907-46	s	TRANSISTOR IMZ1
Q522	8-729-901-01	s	TRANSISTOR DTC144EK
Q523	8-729-230-49	s	TRANSISTOR 2SC2712-YG
Q552	8-729-907-46	s	TRANSISTOR IMZ1
Q553	8-729-216-22	s	TRANSISTOR 2SA1162
Q571	8-729-907-26	s	TRANSISTOR IMX1
Q572	8-729-230-49	s	TRANSISTOR 2SC2712-YG
Q581	8-729-907-46	s	TRANSISTOR IMZ1
Q582	8-729-230-49	s	TRANSISTOR 2SC2712-YG
Q601	8-729-230-49	s	TRANSISTOR 2SC2712-YG
Q603	8-729-907-26	s	TRANSISTOR IMX1
Q605	8-729-901-01	s	TRANSISTOR DTC144EK
Q631	8-729-907-46	s	TRANSISTOR IMZ1
Q633	8-729-907-46	s	TRANSISTOR IMZ1
Q635	8-729-216-22	s	TRANSISTOR 2SA1162
Q636	8-729-907-26	s	TRANSISTOR IMX1
Q638	8-729-907-46	s	TRANSISTOR IMZ1
Q640	8-729-216-22	s	TRANSISTOR 2SA1162
Q671	8-729-907-46	s	TRANSISTOR IMZ1
Q672	8-729-907-46	s	TRANSISTOR IMZ1
Q681	8-729-907-46	s	TRANSISTOR IMZ1
Q682	8-729-907-46	s	TRANSISTOR IMZ1
Q701	8-729-901-01	s	TRANSISTOR DTC144EK
Q702	8-729-907-26	s	TRANSISTOR IMX1
Q704	8-729-230-49	s	TRANSISTOR 2SC2712-YG

(VA-148A BOARD(SVO-5800P))

Ref. No. or Q'ty	Part No.	SP	Description
Q705	8-729-230-49	s	TRANSISTOR 2SC2712-YG
Q706	8-729-230-49	s	TRANSISTOR 2SC2712-YG
Q707	8-729-230-49	s	TRANSISTOR 2SC2712-YG
Q708	8-729-903-10	s	TRANSISTOR FMW1
Q709	8-729-923-06	s	TRANSISTOR FMW8
Q710	8-729-230-49	s	TRANSISTOR 2SC2712-YG
Q711	8-729-903-10	s	TRANSISTOR FMW1
Q712	8-729-923-06	s	TRANSISTOR FMW8
Q713	8-729-216-22	s	TRANSISTOR 2SA1162
Q741	8-729-907-26	s	TRANSISTOR IMX1
Q744	8-729-920-48	s	TRANSISTOR IMH2-T110
Q745	8-729-907-26	s	TRANSISTOR IMX1
Q746	8-729-230-49	s	TRANSISTOR 2SC2712-YG
Q747	8-729-923-06	s	TRANSISTOR FMW8
Q748	8-729-903-10	s	TRANSISTOR FMW1
Q771	8-729-907-26	s	TRANSISTOR IMX1
Q773	8-729-119-78	s	TRANSISTOR 2SC2785-HFE
Q774	8-729-901-01	s	TRANSISTOR DTC144EK
Q775	8-729-907-26	s	TRANSISTOR IMX1
Q776	8-729-230-49	s	TRANSISTOR 2SC2712-YG
Q777	8-729-923-06	s	TRANSISTOR FMW8
Q778	8-729-903-10	s	TRANSISTOR FMW1
Q806	8-729-901-01	s	TRANSISTOR DTC144EK
Q807	8-729-901-03	s	TRANSISTOR DTC144WK
Q830	8-729-920-48	s	TRANSISTOR IMH2-T110
Q831	8-729-907-26	s	TRANSISTOR IMX1
Q833	8-729-230-49	s	TRANSISTOR 2SC2712-YG
Q834	8-729-907-26	s	TRANSISTOR IMX1
Q835	8-729-920-48	s	TRANSISTOR IMH2-T110
Q901	8-729-901-01	s	TRANSISTOR DTC144EK
Q902	8-729-901-01	s	TRANSISTOR DTC144EK
R1	1-216-065-00	s	METAL, CHIP 4.7K 5% 1/10W
R2	1-216-057-00	s	METAL, CHIP 2.2K 5% 1/10W
R3	1-216-089-00	s	METAL, CHIP 47K 5% 1/10W
R4	1-216-089-00	s	METAL, CHIP 47K 5% 1/10W
R5	1-216-089-00	s	METAL, CHIP 47K 5% 1/10W
R6	1-216-089-00	s	METAL, CHIP 47K 5% 1/10W
R7	1-216-073-00	s	METAL, CHIP 10K 5% 1/10W
R10	1-216-097-00	s	METAL, CHIP 100K 5% 1/10W
R11	1-216-081-00	s	METAL, CHIP 22K 5% 1/10W
R12	1-216-061-00	s	METAL, CHIP 3.3K 5% 1/10W
R13	1-216-061-00	s	METAL, CHIP 3.3K 5% 1/10W
R14	1-216-073-00	s	METAL, CHIP 10K 5% 1/10W
R24	1-216-073-00	s	METAL, CHIP 10K 5% 1/10W
R25	1-216-304-11	s	METAL, CHIP 3.3 5% 1/10W
R26	1-216-073-00	s	METAL, CHIP 10K 5% 1/10W
R27	1-216-065-00	s	METAL, CHIP 4.7K 5% 1/10W
R32	1-216-073-00	s	METAL, CHIP 10K 5% 1/10W
R33	1-216-057-00	s	METAL, CHIP 2.2K 5% 1/10W
R34	1-216-065-00	s	METAL, CHIP 4.7K 5% 1/10W
R35	1-216-065-00	s	METAL, CHIP 4.7K 5% 1/10W
R36	1-216-057-00	s	METAL, CHIP 2.2K 5% 1/10W
R37	1-216-057-00	s	METAL, CHIP 2.2K 5% 1/10W
R38	1-216-065-00	s	METAL, CHIP 4.7K 5% 1/10W
R39	1-216-085-00	s	METAL, CHIP 33K 5% 1/10W
R40	1-216-105-91	s	METAL, CHIP 220K 5% 1/10W
R41	1-216-077-00	s	METAL, CHIP 15K 5% 1/10W
R42	1-216-069-00	s	METAL, CHIP 6.8K 5% 1/10W

(VA-148A BOARD(SVO-5800P))

Ref. No. or Q'ty	Part No.	SP	Description
R43	1-216-121-00	s	METAL, CHIP 1M 5% 1/10W
R44	1-216-089-00	s	METAL, CHIP 47K 5% 1/10W
R45	1-216-081-00	s	METAL, CHIP 22K 5% 1/10W
R46	1-216-661-11	s	METAL, CHIP 2.7K 0.5% 1/10W
R47	1-216-057-00	s	METAL, CHIP 2.2K 5% 1/10W
R49	1-216-675-11	s	METAL, CHIP 10K 0.5% 1/10W
R52	1-216-097-00	s	METAL, CHIP 100K 5% 1/10W
R53	1-216-101-00	s	METAL, CHIP 150K 5% 1/10W
R54	1-216-065-00	s	METAL, CHIP 4.7K 5% 1/10W
R55	1-216-033-00	s	METAL, CHIP 220 5% 1/10W
R56	1-216-073-00	s	METAL, CHIP 10K 5% 1/10W
R57	1-216-061-00	s	METAL, CHIP 3.3K 5% 1/10W
R58	1-216-061-00	s	METAL, CHIP 3.3K 5% 1/10W
R59	1-216-061-00	s	METAL, CHIP 3.3K 5% 1/10W
R60	1-216-053-00	s	METAL, CHIP 1.5K 5% 1/10W
R61	1-216-073-00	s	METAL, CHIP 10K 5% 1/10W
R62	1-216-073-00	s	METAL, CHIP 10K 5% 1/10W
R63	1-216-073-00	s	METAL, CHIP 10K 5% 1/10W
R64	1-216-073-00	s	METAL, CHIP 10K 5% 1/10W
R65	1-216-089-00	s	METAL, CHIP 47K 5% 1/10W
R66	1-216-029-00	s	METAL, CHIP 150 5% 1/10W
R67	1-216-073-00	s	METAL, CHIP 10K 5% 1/10W
R68	1-220-266-11	s	METAL, CHIP 56 5% 1/2W
R100	1-216-073-00	s	METAL, CHIP 10K 5% 1/10W
R102	1-216-097-00	s	METAL, CHIP 100K 5% 1/10W
R103	1-216-001-00	s	METAL, CHIP 10 5% 1/10W
R104	1-216-085-00	s	METAL, CHIP 33K 5% 1/10W
R105	1-216-089-00	s	METAL, CHIP 47K 5% 1/10W
R106	1-216-109-00	s	METAL, CHIP 330K 5% 1/10W
R107	1-216-025-00	s	METAL, CHIP 100 5% 1/10W
R108	1-216-097-00	s	METAL, CHIP 100K 5% 1/10W
R109	1-216-077-00	s	METAL, CHIP 15K 5% 1/10W
R110	1-216-057-00	s	METAL, CHIP 2.2K 5% 1/10W
R111	1-216-045-00	s	METAL, CHIP 680 5% 1/10W
R112	1-216-073-00	s	METAL, CHIP 10K 5% 1/10W
R113	1-216-121-00	s	METAL, CHIP 1M 5% 1/10W
R114	1-216-666-11	s	METAL, CHIP 4.3K 0.5% 1/10W
R115	1-216-073-00	s	METAL, CHIP 10K 5% 1/10W
R116	1-216-025-00	s	METAL, CHIP 100 5% 1/10W
R117	1-216-663-11	s	METAL, CHIP 3.3K 0.5% 1/10W
R118	1-216-662-11	s	METAL, CHIP 3K 0.5% 1/10W
R119	1-216-641-11	s	METAL, CHIP 390 0.5% 1/10W
R120	1-216-690-11	s	METAL, CHIP 43K 0.5% 1/10W
R121	1-216-065-00	s	METAL, CHIP 4.7K 5% 1/10W
R122	1-216-081-00	s	METAL, CHIP 22K 5% 1/10W
R123	1-216-077-00	s	METAL, CHIP 15K 5% 1/10W
R124	1-216-077-00	s	METAL, CHIP 15K 5% 1/10W
R125	1-216-085-00	s	METAL, CHIP 33K 5% 1/10W
R126	1-216-071-00	s	METAL, CHIP 8.2K 5% 1/10W
R127	1-216-655-11	s	METAL, CHIP 1.5K 0.5% 1/10W
R128	1-215-399-00	s	METAL 120 1% 1/4W
R130	1-216-691-11	s	METAL, CHIP 47K 0.5% 1/10W
R131	1-216-049-00	s	METAL, CHIP 1K 5% 1/10W
R132	1-216-065-00	s	METAL, CHIP 4.7K 5% 1/10W
R133	1-216-081-00	s	METAL, CHIP 22K 5% 1/10W
R134	1-216-073-00	s	METAL, CHIP 10K 5% 1/10W
R135	1-216-071-00	s	METAL, CHIP 8.2K 5% 1/10W
R136	1-216-093-00	s	METAL, CHIP 68K 5% 1/10W
R137	1-216-699-11	s	METAL, CHIP 100K 0.5% 1/10W

(VA-148A BOARD(SVO-5800P))

Ref. No. or Q'ty	Part No.	SP	Description
R138	1-216-013-00	s	METAL, CHIP 33 5% 1/10W
R139	1-216-065-00	s	METAL, CHIP 4.7K 5% 1/10W
R140	1-216-049-00	s	METAL, CHIP 1K 5% 1/10W
R141	1-216-073-00	s	METAL, CHIP 10K 5% 1/10W
R142	1-216-081-00	s	METAL, CHIP 22K 5% 1/10W
R143	1-216-057-00	s	METAL, CHIP 2.2K 5% 1/10W
R144	1-216-053-00	s	METAL, CHIP 1.5K 5% 1/10W
R145	1-216-065-00	s	METAL, CHIP 4.7K 5% 1/10W
R146	1-215-421-00	s	METAL 1K 1% 1/4W
R147	1-215-397-11	s	METAL 100 1% 1/4W
R149	1-216-043-91	s	METAL, CHIP 560 5% 1/10W
R150	1-216-073-00	s	METAL, CHIP 10K 5% 1/10W
R151	1-216-073-00	s	METAL, CHIP 10K 5% 1/10W
R153	1-216-304-11	s	METAL, CHIP 3.3 5% 1/10W
R154	1-216-053-00	s	METAL, CHIP 1.5K 5% 1/10W
R155	1-216-073-00	s	METAL, CHIP 10K 5% 1/10W
R156	1-216-077-00	s	METAL, CHIP 15K 5% 1/10W
R157	1-216-057-00	s	METAL, CHIP 2.2K 5% 1/10W
R158	1-216-057-00	s	METAL, CHIP 2.2K 5% 1/10W
R163	1-216-073-00	s	METAL, CHIP 10K 5% 1/10W
R164	1-216-069-00	s	METAL, CHIP 6.8K 5% 1/10W
R165	1-216-057-00	s	METAL, CHIP 2.2K 5% 1/10W
R166	1-216-057-00	s	METAL, CHIP 2.2K 5% 1/10W
R168	1-216-049-00	s	METAL, CHIP 1K 5% 1/10W
R169	1-216-089-00	s	METAL, CHIP 47K 5% 1/10W
R170	1-216-097-00	s	METAL, CHIP 100K 5% 1/10W
R171	1-216-097-00	s	METAL, CHIP 100K 5% 1/10W
R200	1-216-089-00	s	METAL, CHIP 47K 5% 1/10W
R202	1-216-097-00	s	METAL, CHIP 100K 5% 1/10W
R203	1-216-001-00	s	METAL, CHIP 10 5% 1/10W
R204	1-216-073-00	s	METAL, CHIP 10K 5% 1/10W
R205	1-216-049-00	s	METAL, CHIP 1K 5% 1/10W
R206	1-216-109-00	s	METAL, CHIP 330K 5% 1/10W
R207	1-216-025-00	s	METAL, CHIP 100 5% 1/10W
R208	1-216-097-00	s	METAL, CHIP 100K 5% 1/10W
R209	1-216-077-00	s	METAL, CHIP 15K 5% 1/10W
R210	1-216-057-00	s	METAL, CHIP 2.2K 5% 1/10W
R211	1-216-045-00	s	METAL, CHIP 680 5% 1/10W
R212	1-216-065-00	s	METAL, CHIP 4.7K 5% 1/10W
R213	1-216-121-00	s	METAL, CHIP 1M 5% 1/10W
R214	1-216-666-11	s	METAL, CHIP 4.3K 0.5% 1/10W
R215	1-216-073-00	s	METAL, CHIP 10K 5% 1/10W
R216	1-216-025-00	s	METAL, CHIP 100 5% 1/10W
R217	1-216-663-11	s	METAL, CHIP 3.3K 0.5% 1/10W
R218	1-216-662-11	s	METAL, CHIP 3K 0.5% 1/10W
R219	1-216-641-11	s	METAL, CHIP 390 0.5% 1/10W
R220	1-216-690-11	s	METAL, CHIP 43K 0.5% 1/10W
R221	1-216-065-00	s	METAL, CHIP 4.7K 5% 1/10W
R222	1-216-089-00	s	METAL, CHIP 47K 5% 1/10W
R223	1-216-077-00	s	METAL, CHIP 15K 5% 1/10W
R224	1-216-077-00	s	METAL, CHIP 15K 5% 1/10W
R225	1-216-085-00	s	METAL, CHIP 33K 5% 1/10W
R226	1-216-071-00	s	METAL, CHIP 8.2K 5% 1/10W
R227	1-216-655-11	s	METAL, CHIP 1.5K 0.5% 1/10W
R228	1-215-399-00	s	METAL 120 1% 1/4W
R230	1-216-691-11	s	METAL, CHIP 47K 0.5% 1/10W
R231	1-216-049-00	s	METAL, CHIP 1K 5% 1/10W
R232	1-216-065-00	s	METAL, CHIP 4.7K 5% 1/10W
R233	1-216-081-00	s	METAL, CHIP 22K 5% 1/10W

(VA-148A BOARD(SVO-5800P))

Ref. No. or Q'ty	Part No.	SP	Description
R234	1-216-073-00	s	METAL, CHIP 10K 5% 1/10W
R235	1-216-071-00	s	METAL, CHIP 8.2K 5% 1/10W
R236	1-216-093-00	s	METAL, CHIP 68K 5% 1/10W
R237	1-216-699-11	s	METAL, CHIP 100K 0.5% 1/10W
R238	1-216-013-00	s	METAL, CHIP 33 5% 1/10W
R239	1-216-065-00	s	METAL, CHIP 4.7K 5% 1/10W
R240	1-216-049-00	s	METAL, CHIP 1K 5% 1/10W
R241	1-216-073-00	s	METAL, CHIP 10K 5% 1/10W
R242	1-216-081-00	s	METAL, CHIP 22K 5% 1/10W
R243	1-216-057-00	s	METAL, CHIP 2.2K 5% 1/10W
R244	1-216-053-00	s	METAL, CHIP 1.5K 5% 1/10W
R245	1-215-397-11	s	METAL 100 1% 1/4W
R246	1-215-421-00	s	METAL 1K 1% 1/4W
R249	1-216-043-91	s	METAL, CHIP 560 5% 1/10W
R250	1-216-073-00	s	METAL, CHIP 10K 5% 1/10W
R251	1-216-073-00	s	METAL, CHIP 10K 5% 1/10W
R253	1-216-304-11	s	METAL, CHIP 3.3 5% 1/10W
R254	1-216-053-00	s	METAL, CHIP 1.5K 5% 1/10W
R255	1-216-073-00	s	METAL, CHIP 10K 5% 1/10W
R256	1-216-077-00	s	METAL, CHIP 15K 5% 1/10W
R257	1-216-057-00	s	METAL, CHIP 2.2K 5% 1/10W
R258	1-216-057-00	s	METAL, CHIP 2.2K 5% 1/10W
R259	1-216-097-00	s	METAL, CHIP 100K 5% 1/10W
R260	1-216-097-00	s	METAL, CHIP 100K 5% 1/10W
R263	1-216-073-00	s	METAL, CHIP 10K 5% 1/10W
R264	1-216-069-00	s	METAL, CHIP 6.8K 5% 1/10W
R265	1-216-049-00	s	METAL, CHIP 1K 5% 1/10W
R267	1-208-799-11	s	METAL, CHIP 5.1K 0.5% 1/10W
R268	1-216-049-00	s	METAL, CHIP 1K 5% 1/10W
R269	1-216-089-00	s	METAL, CHIP 47K 5% 1/10W
R270	1-216-057-00	s	METAL, CHIP 2.2K 5% 1/10W
R271	1-216-057-00	s	METAL, CHIP 2.2K 5% 1/10W
R301	1-216-081-00	s	METAL, CHIP 22K 5% 1/10W
R302	1-216-049-00	s	METAL, CHIP 1K 5% 1/10W
R303	1-216-061-00	s	METAL, CHIP 3.3K 5% 1/10W
R304	1-216-067-00	s	METAL, CHIP 5.6K 5% 1/10W
R305	1-216-049-00	s	METAL, CHIP 1K 5% 1/10W
R306	1-216-683-11	s	METAL, CHIP 22K 0.5% 1/10W
R307	1-216-105-91	s	METAL, CHIP 220K 5% 1/10W
R308	1-216-085-00	s	METAL, CHIP 33K 5% 1/10W
R309	1-208-811-11	s	METAL, CHIP 16K 0.5% 1/10W
R310	1-216-675-11	s	METAL, CHIP 10K 0.5% 1/10W
R311	1-216-073-00	s	METAL, CHIP 10K 5% 1/10W
R312	1-216-667-11	s	METAL, CHIP 4.7K 0.5% 1/10W
R313	1-216-081-00	s	METAL, CHIP 22K 5% 1/10W
R314	1-216-059-00	s	METAL, CHIP 2.7K 5% 1/10W
R315	1-216-061-00	s	METAL, CHIP 3.3K 5% 1/10W
R316	1-216-013-00	s	METAL, CHIP 33 5% 1/10W
R317	1-216-081-00	s	METAL, CHIP 22K 5% 1/10W
R318	1-216-089-00	s	METAL, CHIP 47K 5% 1/10W
R319	1-216-057-00	s	METAL, CHIP 2.2K 5% 1/10W
R320	1-216-073-00	s	METAL, CHIP 10K 5% 1/10W
R321	1-216-081-00	s	METAL, CHIP 22K 5% 1/10W
R322	1-216-065-00	s	METAL, CHIP 4.7K 5% 1/10W
R401	1-216-081-00	s	METAL, CHIP 22K 5% 1/10W
R402	1-216-049-00	s	METAL, CHIP 1K 5% 1/10W
R403	1-216-061-00	s	METAL, CHIP 3.3K 5% 1/10W
R404	1-216-067-00	s	METAL, CHIP 5.6K 5% 1/10W
R405	1-216-049-00	s	METAL, CHIP 1K 5% 1/10W

(VA-148A BOARD(SVO-5800P))

Ref. No. or Q'ty	Part No.	SP	Description
R406	1-216-683-11	s	METAL, CHIP 22K 0.5% 1/10W
R407	1-216-105-91	s	METAL, CHIP 220K 5% 1/10W
R408	1-216-085-00	s	METAL, CHIP 33K 5% 1/10W
R409	1-216-075-00	s	METAL, CHIP 12K 5% 1/10W
R410	1-216-663-11	s	METAL, CHIP 3.3K 0.5% 1/10W
R411	1-216-073-00	s	METAL, CHIP 10K 5% 1/10W
R412	1-216-667-11	s	METAL, CHIP 4.7K 0.5% 1/10W
R413	1-216-081-00	s	METAL, CHIP 22K 5% 1/10W
R414	1-216-059-00	s	METAL, CHIP 2.7K 5% 1/10W
R415	1-216-061-00	s	METAL, CHIP 3.3K 5% 1/10W
R416	1-216-013-00	s	METAL, CHIP 33 5% 1/10W
R417	1-216-081-00	s	METAL, CHIP 22K 5% 1/10W
R418	1-216-089-00	s	METAL, CHIP 47K 5% 1/10W
R419	1-216-057-00	s	METAL, CHIP 2.2K 5% 1/10W
R420	1-216-073-00	s	METAL, CHIP 10K 5% 1/10W
R421	1-216-081-00	s	METAL, CHIP 22K 5% 1/10W
R422	1-216-065-00	s	METAL, CHIP 4.7K 5% 1/10W
R521	1-216-073-00	s	METAL, CHIP 10K 5% 1/10W
R526	1-216-651-11	s	METAL, CHIP 1K 0.5% 1/10W
R527	1-216-053-00	s	METAL, CHIP 1.5K 5% 1/10W
R528	1-216-081-00	s	METAL, CHIP 22K 5% 1/10W
R529	1-216-647-11	s	METAL, CHIP 680 0.5% 1/10W
R530	1-216-073-00	s	METAL, CHIP 10K 5% 1/10W
R531	1-216-651-11	s	METAL, CHIP 1K 0.5% 1/10W
R532	1-216-037-00	s	METAL, CHIP 330 5% 1/10W
R533	1-216-095-00	s	METAL, CHIP 82K 5% 1/10W
R534	1-216-113-00	s	METAL, CHIP 470K 5% 1/10W
R535	1-216-651-11	s	METAL, CHIP 1K 0.5% 1/10W
R536	1-216-101-00	s	METAL, CHIP 150K 5% 1/10W
R537	1-216-049-00	s	METAL, CHIP 1K 5% 1/10W
R538	1-216-041-00	s	METAL, CHIP 470 5% 1/10W
R539	1-216-061-00	s	METAL, CHIP 3.3K 5% 1/10W
R540	1-216-115-00	s	METAL, CHIP 560K 5% 1/10W
R541	1-216-107-00	s	METAL, CHIP 270K 5% 1/10W
R542	1-216-646-11	s	METAL, CHIP 620 0.5% 1/10W
R543	1-216-067-00	s	METAL, CHIP 5.6K 5% 1/10W
R544	1-216-049-00	s	METAL, CHIP 1K 5% 1/10W
R551	1-216-099-00	s	METAL, CHIP 120K 5% 1/10W
R552	1-216-041-00	s	METAL, CHIP 470 5% 1/10W
R553	1-216-057-00	s	METAL, CHIP 2.2K 5% 1/10W
R554	1-216-113-00	s	METAL, CHIP 470K 5% 1/10W
R555	1-216-065-00	s	METAL, CHIP 4.7K 5% 1/10W
R556	1-216-057-00	s	METAL, CHIP 2.2K 5% 1/10W
R557	1-216-075-00	s	METAL, CHIP 12K 5% 1/10W
R558	1-216-651-11	s	METAL, CHIP 1K 0.5% 1/10W
R560	1-216-057-00	s	METAL, CHIP 2.2K 5% 1/10W
R561	1-216-081-00	s	METAL, CHIP 22K 5% 1/10W
R563	1-216-651-11	s	METAL, CHIP 1K 0.5% 1/10W
R564	1-216-296-00	s	METAL, CHIP 0 5% 1/8W
R565	1-216-645-11	s	METAL, CHIP 560 0.5% 1/10W
R566	1-208-800-11	s	METAL, CHIP 5.6K 0.5% 1/10W
R567	1-216-651-11	s	METAL, CHIP 1K 0.5% 1/10W
R568	1-216-073-00	s	METAL, CHIP 10K 5% 1/10W
R569	1-216-651-11	s	METAL, CHIP 1K 0.5% 1/10W
R571	1-216-073-00	s	METAL, CHIP 10K 5% 1/10W
R572	1-216-041-00	s	METAL, CHIP 470 5% 1/10W
R573	1-216-033-00	s	METAL, CHIP 220 5% 1/10W
R574	1-216-049-00	s	METAL, CHIP 1K 5% 1/10W
R575	1-216-049-00	s	METAL, CHIP 1K 5% 1/10W

(VA-148A BOARD(SVO-5800P))

Ref. No. or Q'ty	Part No.	SP	Description
R576	1-216-077-00	s	METAL, CHIP 15K 5% 1/10W
R577	1-216-081-00	s	METAL, CHIP 22K 5% 1/10W
R578	1-216-053-00	s	METAL, CHIP 1.5K 5% 1/10W
R581	1-216-697-91	s	METAL, CHIP 82K 0.5% 1/10W
R582	1-216-049-00	s	METAL, CHIP 1K 5% 1/10W
R583	1-216-695-11	s	METAL, CHIP 68K 0.5% 1/10W
R584	1-216-671-11	s	METAL, CHIP 6.8K 0.5% 1/10W
R585	1-216-025-00	s	METAL, CHIP 100 5% 1/10W
R586	1-216-025-00	s	METAL, CHIP 100 5% 1/10W
R587	1-216-049-00	s	METAL, CHIP 1K 5% 1/10W
R588	1-216-025-00	s	METAL, CHIP 100 5% 1/10W
R589	1-216-665-11	s	METAL, CHIP 3.9K 0.5% 1/10W
R590	1-216-059-00	s	METAL, CHIP 2.7K 5% 1/10W
R601	1-216-073-00	s	METAL, CHIP 10K 5% 1/10W
R602	1-216-085-00	s	METAL, CHIP 33K 5% 1/10W
R603	1-216-651-11	s	METAL, CHIP 1K 0.5% 1/10W
R605	1-216-053-00	s	METAL, CHIP 1.5K 5% 1/10W
R608	1-216-651-11	s	METAL, CHIP 1K 0.5% 1/10W
R611	1-215-493-00	s	METAL 1M 1% 1/6W
R612	1-216-049-00	s	METAL, CHIP 1K 5% 1/10W
R613	1-216-041-00	s	METAL, CHIP 470 5% 1/10W
R614	1-216-057-00	s	METAL, CHIP 2.2K 5% 1/10W
R615	1-216-057-00	s	METAL, CHIP 2.2K 5% 1/10W
R616	1-216-057-00	s	METAL, CHIP 2.2K 5% 1/10W
R618	1-216-065-00	s	METAL, CHIP 4.7K 5% 1/10W
R619	1-216-035-00	s	METAL, CHIP 270 5% 1/10W
R620	1-216-121-00	s	METAL, CHIP 1M 5% 1/10W
R621	1-216-033-00	s	METAL, CHIP 220 5% 1/10W
R622	1-216-033-00	s	METAL, CHIP 220 5% 1/10W
R623	1-216-061-00	s	METAL, CHIP 3.3K 5% 1/10W
R624	1-216-061-00	s	METAL, CHIP 3.3K 5% 1/10W
R625	1-216-033-00	s	METAL, CHIP 220 5% 1/10W
R626	1-216-295-00	s	METAL, CHIP 0
R627	1-216-049-00	s	METAL, CHIP 1K 5% 1/10W
R628	1-216-057-00	s	METAL, CHIP 2.2K 5% 1/10W
R629	1-216-631-11	s	METAL, CHIP 150 0.5% 1/10W
R630	1-216-073-00	s	METAL, CHIP 10K 5% 1/10W
R631	1-216-049-00	s	METAL, CHIP 1K 5% 1/10W
R632	1-216-017-00	s	METAL, CHIP 47 5% 1/10W
R633	1-216-041-00	s	METAL, CHIP 470 5% 1/10W
R634	1-216-049-00	s	METAL, CHIP 1K 5% 1/10W
R635	1-216-649-11	s	METAL, CHIP 820 0.5% 1/10W
R636	1-216-049-00	s	METAL, CHIP 1K 5% 1/10W
R637	1-216-651-11	s	METAL, CHIP 1K 0.5% 1/10W
R638	1-208-800-11	s	METAL, CHIP 5.6K 0.5% 1/10W
R639	1-216-651-11	s	METAL, CHIP 1K 0.5% 1/10W
R640	1-216-645-11	s	METAL, CHIP 560 0.5% 1/10W
R641	1-216-647-11	s	METAL, CHIP 680 0.5% 1/10W
R642	1-216-629-11	s	METAL, CHIP 120 0.5% 1/10W
R643	1-216-652-11	s	METAL, CHIP 1.1K 0.5% 1/10W
R644	1-216-049-00	s	METAL, CHIP 1K 5% 1/10W
R645	1-216-675-11	s	METAL, CHIP 10K 0.5% 1/10W
R646	1-216-121-00	s	METAL, CHIP 1M 5% 1/10W
R647	1-216-683-11	s	METAL, CHIP 22K 0.5% 1/10W
R648	1-216-683-11	s	METAL, CHIP 22K 0.5% 1/10W
R649	1-216-049-00	s	METAL, CHIP 1K 5% 1/10W
R650	1-216-025-00	s	METAL, CHIP 100 5% 1/10W
R651	1-216-049-00	s	METAL, CHIP 1K 5% 1/10W
R658	1-216-049-00	s	METAL, CHIP 1K 5% 1/10W

(VA-148A BOARD(SVO-5800P))

Ref. No. or Q'ty	Part No.	SP	Description
R659	1-216-661-11	s	METAL, CHIP 2.7K 0.5% 1/10W
R660	1-216-667-11	s	METAL, CHIP 4.7K 0.5% 1/10W
R661	1-216-652-11	s	METAL, CHIP 1.1K 0.5% 1/10W
R662	1-216-081-00	s	METAL, CHIP 22K 5% 1/10W
R663	1-216-075-00	s	METAL, CHIP 12K 5% 1/10W
R664	1-216-073-00	s	METAL, CHIP 10K 5% 1/10W
R665	1-216-105-91	s	METAL, CHIP 220K 5% 1/10W
R666	1-216-049-00	s	METAL, CHIP 1K 5% 1/10W
R667	1-216-659-11	s	METAL, CHIP 2.2K 0.5% 1/10W
R668	1-216-057-00	s	METAL, CHIP 2.2K 5% 1/10W
R669	1-216-049-00	s	METAL, CHIP 1K 5% 1/10W
R671	1-216-049-00	s	METAL, CHIP 1K 5% 1/10W
R672	1-216-691-11	s	METAL, CHIP 47K 0.5% 1/10W
R673	1-216-651-11	s	METAL, CHIP 1K 0.5% 1/10W
R674	1-216-651-11	s	METAL, CHIP 1K 0.5% 1/10W
R675	1-216-049-00	s	METAL, CHIP 1K 5% 1/10W
R676	1-216-049-00	s	METAL, CHIP 1K 5% 1/10W
R677	1-216-049-00	s	METAL, CHIP 1K 5% 1/10W
R678	1-249-417-11	s	CARBON 1K 5% 1/4W
R679	1-208-774-11	s	METAL, CHIP 470 0.50% 1/10W
R680	1-216-057-00	s	METAL, CHIP 2.2K 5% 1/10W
R681	1-216-689-11	s	METAL, CHIP 39K 0.5% 1/10W
R682	1-216-675-11	s	METAL, CHIP 10K 0.5% 1/10W
R683	1-216-645-11	s	METAL, CHIP 560 0.5% 1/10W
R684	1-216-673-11	s	METAL, CHIP 8.2K 0.5% 1/10W
R685	1-208-774-11	s	METAL, CHIP 470 0.50% 1/10W
R686	1-216-647-11	s	METAL, CHIP 680 0.5% 1/10W
R687	1-216-633-11	s	METAL, CHIP 180 0.5% 1/10W
R688	1-216-627-11	s	METAL, CHIP 100 0.5% 1/10W
R689	1-216-041-00	s	METAL, CHIP 470 5% 1/10W
R690	1-216-061-00	s	METAL, CHIP 3.3K 5% 1/10W
R701	1-216-073-00	s	METAL, CHIP 10K 5% 1/10W
R703	1-216-073-00	s	METAL, CHIP 10K 5% 1/10W
R704	1-216-647-11	s	METAL, CHIP 680 0.5% 1/10W
R705	1-216-041-00	s	METAL, CHIP 470 5% 1/10W
R706	1-216-666-11	s	METAL, CHIP 4.3K 0.5% 1/10W
R707	1-216-651-11	s	METAL, CHIP 1K 0.5% 1/10W
R708	1-216-049-00	s	METAL, CHIP 1K 5% 1/10W
R709	1-216-661-11	s	METAL, CHIP 2.7K 0.5% 1/10W
R710	1-216-081-00	s	METAL, CHIP 22K 5% 1/10W
R711	1-216-077-00	s	METAL, CHIP 15K 5% 1/10W
R712	1-216-049-00	s	METAL, CHIP 1K 5% 1/10W
R713	1-216-049-00	s	METAL, CHIP 1K 5% 1/10W
R714	1-216-655-11	s	METAL, CHIP 1.5K 0.5% 1/10W
R715	1-216-627-11	s	METAL, CHIP 100 0.5% 1/10W
R716	1-216-081-00	s	METAL, CHIP 22K 5% 1/10W
R717	1-216-073-00	s	METAL, CHIP 10K 5% 1/10W
R718	1-216-651-11	s	METAL, CHIP 1K 0.5% 1/10W
R719	1-216-651-11	s	METAL, CHIP 1K 0.5% 1/10W
R720	1-208-774-11	s	METAL, CHIP 470 0.50% 1/10W
R721	1-216-651-11	s	METAL, CHIP 1K 0.5% 1/10W
R722	1-216-045-00	s	METAL, CHIP 680 5% 1/10W
R723	1-208-774-11	s	METAL, CHIP 470 0.50% 1/10W
R724	1-216-647-11	s	METAL, CHIP 680 0.5% 1/10W
R725	1-216-651-11	s	METAL, CHIP 1K 0.5% 1/10W
R726	1-216-651-11	s	METAL, CHIP 1K 0.5% 1/10W
R727	1-216-045-00	s	METAL, CHIP 680 5% 1/10W
R728	1-216-651-11	s	METAL, CHIP 1K 0.5% 1/10W
R729	1-216-651-11	s	METAL, CHIP 1K 0.5% 1/10W

(VA-148A BOARD(SVO-5800P))

Ref. No. or Q'ty	Part No.	SP	Description
R730	1-216-651-11	s	METAL, CHIP 1K 0.5% 1/10W
R731	1-216-645-11	s	METAL, CHIP 560 0.5% 1/10W
R732	1-216-660-11	s	METAL, CHIP 2.4K 0.5% 1/10W
R741	1-216-033-00	s	METAL, CHIP 220 5% 1/10W
R742	1-216-073-00	s	METAL, CHIP 10K 5% 1/10W
R743	1-216-041-00	s	METAL, CHIP 470 5% 1/10W
R744	1-208-774-11	s	METAL, CHIP 470 0.50% 1/10W
R745	1-216-049-00	s	METAL, CHIP 1K 5% 1/10W
R746	1-216-053-00	s	METAL, CHIP 1.5K 5% 1/10W
R747	1-208-784-11	s	METAL, CHIP 1.2K 0.50% 1/10W
R748	1-208-774-11	s	METAL, CHIP 470 0.50% 1/10W
R749	1-216-015-00	s	METAL 39 5% 1/10W
R750	1-208-784-11	s	METAL, CHIP 1.2K 0.50% 1/10W
R751	1-208-784-11	s	METAL, CHIP 1.2K 0.50% 1/10W
R753	1-216-041-00	s	METAL, CHIP 470 5% 1/10W
R754	1-216-671-11	s	METAL, CHIP 6.8K 0.5% 1/10W
R755	1-216-635-11	s	METAL, CHIP 220 0.5% 1/10W
R756	1-216-647-11	s	METAL, CHIP 680 0.5% 1/10W
R757	1-216-647-11	s	METAL, CHIP 680 0.5% 1/10W
R758	1-216-622-11	s	METAL, CHIP 62 0.5% 1/10W
R759	1-216-647-11	s	METAL, CHIP 680 0.5% 1/10W
R760	1-216-049-00	s	METAL, CHIP 1K 5% 1/10W
R761	1-216-081-00	s	METAL, CHIP 22K 5% 1/10W
R762	1-216-075-00	s	METAL, CHIP 12K 5% 1/10W
R763	1-216-057-00	s	METAL, CHIP 2.2K 5% 1/10W
R770	1-216-660-11	s	METAL, CHIP 2.4K 0.5% 1/10W
R771	1-216-033-00	s	METAL, CHIP 220 5% 1/10W
R772	1-216-073-00	s	METAL, CHIP 10K 5% 1/10W
R773	1-216-049-00	s	METAL, CHIP 1K 5% 1/10W
R774	1-216-627-11	s	METAL, CHIP 100 0.5% 1/10W
R775	1-216-049-00	s	METAL, CHIP 1K 5% 1/10W
R776	1-216-053-00	s	METAL, CHIP 1.5K 5% 1/10W
R777	1-208-784-11	s	METAL, CHIP 1.2K 0.50% 1/10W
R778	1-208-774-11	s	METAL, CHIP 470 0.50% 1/10W
R780	1-208-784-11	s	METAL, CHIP 1.2K 0.50% 1/10W
R781	1-208-784-11	s	METAL, CHIP 1.2K 0.50% 1/10W
R782	1-216-057-00	s	METAL, CHIP 2.2K 5% 1/10W
R783	1-216-645-11	s	METAL, CHIP 560 0.5% 1/10W
R784	1-216-655-11	s	METAL, CHIP 1.5K 0.5% 1/10W
R787	1-216-647-11	s	METAL, CHIP 680 0.5% 1/10W
R788	1-216-625-11	s	METAL, CHIP 82 0.5% 1/10W
R789	1-216-647-11	s	METAL, CHIP 680 0.5% 1/10W
R790	1-216-049-00	s	METAL, CHIP 1K 5% 1/10W
R791	1-216-081-00	s	METAL, CHIP 22K 5% 1/10W
R792	1-216-075-00	s	METAL, CHIP 12K 5% 1/10W
R793	1-216-057-00	s	METAL, CHIP 2.2K 5% 1/10W
R809	1-216-295-91	s	RES, CHIP 0
R810	1-216-065-00	s	METAL, CHIP 4.7K 5% 1/10W
R814	1-216-065-00	s	METAL, CHIP 4.7K 5% 1/10W
R822	1-216-041-00	s	METAL, CHIP 470 5% 1/10W
R830	1-208-800-11	s	METAL, CHIP 5.6K 0.5% 1/10W
R831	1-216-073-00	s	METAL, CHIP 10K 5% 1/10W
R832	1-216-041-00	s	METAL, CHIP 470 5% 1/10W
R833	1-216-041-00	s	METAL, CHIP 470 5% 1/10W
R834	1-216-073-00	s	METAL, CHIP 10K 5% 1/10W
R835	1-216-049-00	s	METAL, CHIP 1K 5% 1/10W
R836	1-216-049-00	s	METAL, CHIP 1K 5% 1/10W
R837	1-216-073-00	s	METAL, CHIP 10K 5% 1/10W
R838	1-216-081-00	s	METAL, CHIP 22K 5% 1/10W

(VA-148A BOARD(SVO-5800P))

Ref. No. or Q'ty	Part No.	SP	Description
R839	1-216-073-00	s	METAL, CHIP 10K 5% 1/10W
R840	1-216-073-00	s	METAL, CHIP 10K 5% 1/10W
R841	1-216-667-11	s	METAL, CHIP 4.7K 0.5% 1/10W
R843	1-216-057-00	s	METAL, CHIP 2.2K 5% 1/10W
R845	1-216-079-00	s	METAL, CHIP 18K 5% 1/10W
R846	1-216-081-00	s	METAL, CHIP 22K 5% 1/10W
R847	1-216-077-00	s	METAL, CHIP 15K 5% 1/10W
R849	1-216-041-00	s	METAL, CHIP 470 5% 1/10W
R850	1-216-295-91	s	RES, CHIP 0
R851	1-216-295-91	s	RES, CHIP 0
R852	1-216-073-00	s	METAL, CHIP 10K 5% 1/10W
R853	1-216-089-00	s	METAL, CHIP 47K 5% 1/10W
R854	1-216-053-00	s	METAL, CHIP 1.5K 5% 1/10W
R855	1-216-069-00	s	METAL, CHIP 6.8K 5% 1/10W
R856	1-216-051-00	s	METAL, CHIP 1.2K 5% 1/10W
R857	1-216-049-00	s	METAL, CHIP 1K 5% 1/10W
R858	1-216-097-00	s	METAL, CHIP 100K 5% 1/10W
R859	1-216-121-00	s	METAL, CHIP 1M 5% 1/10W
R860	1-216-121-00	s	METAL, CHIP 1M 5% 1/10W
R861	1-216-097-00	s	METAL, CHIP 100K 5% 1/10W
R862	1-216-097-00	s	METAL, CHIP 100K 5% 1/10W
R863	1-216-089-00	s	METAL, CHIP 47K 5% 1/10W
R901	1-216-073-00	s	METAL, CHIP 10K 5% 1/10W
R902	1-216-073-00	s	METAL, CHIP 10K 5% 1/10W
R903	1-216-049-00	s	METAL, CHIP 1K 5% 1/10W
R904	1-216-049-00	s	METAL, CHIP 1K 5% 1/10W
R905	1-216-041-00	s	METAL, CHIP 470 5% 1/10W
R906	1-216-624-11	s	METAL, CHIP 75 0.5% 1/10W
R907	1-216-073-00	s	METAL, CHIP 10K 5% 1/10W
R908	1-216-624-11	s	METAL, CHIP 75 0.5% 1/10W
R909	1-216-061-00	s	METAL, CHIP 3.3K 5% 1/10W
R910	1-216-089-00	s	METAL, CHIP 47K 5% 1/10W
R911	1-216-073-00	s	METAL, CHIP 10K 5% 1/10W
R912	1-216-041-00	s	METAL, CHIP 470 5% 1/10W
R913	1-216-624-11	s	METAL, CHIP 75 0.5% 1/10W
R915	1-216-073-00	s	METAL, CHIP 10K 5% 1/10W
R916	1-216-073-00	s	METAL, CHIP 10K 5% 1/10W
R917	1-216-624-11	s	METAL, CHIP 75 0.5% 1/10W
R918	1-216-675-11	s	METAL, CHIP 10K 0.5% 1/10W
R919	1-216-624-11	s	METAL, CHIP 75 0.5% 1/10W
R920	1-216-624-11	s	METAL, CHIP 75 0.5% 1/10W
R921	1-216-073-00	s	METAL, CHIP 10K 5% 1/10W
R922	1-216-061-00	s	METAL, CHIP 3.3K 5% 1/10W
R923	1-216-089-00	s	METAL, CHIP 47K 5% 1/10W
R924	1-208-775-11	s	METAL, CHIP 510 0.50% 1/10W
RB101	1-236-908-11	s	RESISTOR BLOCK, CHIP 10Kx4
RB102	1-236-908-11	s	RESISTOR BLOCK, CHIP 10Kx4
RB103	1-236-908-11	s	RESISTOR BLOCK, CHIP 10Kx4
RB104	1-236-908-11	s	RESISTOR BLOCK, CHIP 10Kx4
RB105	1-236-908-11	s	RESISTOR BLOCK, CHIP 10Kx4
RB801	1-236-908-11	s	RESISTOR BLOCK, CHIP 10Kx4
RB802	1-239-412-11	s	RESISTOR BLOCK, CHIP 100x4
RB803	1-239-412-11	s	RESISTOR BLOCK, CHIP 100x4
RV1	1-241-630-11	s	RES, ADJ CARBON 10K
RV103	1-241-786-11	s	RES, ADJ METAL 22k
RV104	1-241-783-11	s	RES, ADJ METAL 2.2k
RV105	1-241-786-11	s	RES, ADJ METAL 22k
RV106	1-241-785-11	s	RES, ADJ METAL 10k

(VA-148A BOARD(SVO-5800P))

Ref. No. or Q'ty	Part No.	SP	Description
RV107	1-241-785-11	s	RES, ADJ METAL 10k
RV203	1-241-786-11	s	RES, ADJ METAL 22k
RV204	1-241-783-11	s	RES, ADJ METAL 2.2k
RV205	1-241-786-11	s	RES, ADJ METAL 22k
RV206	1-241-785-11	s	RES, ADJ METAL 10k
RV207	1-241-785-11	s	RES, ADJ METAL 10k
RV301	1-241-765-11	s	RES, ADJ METAL 22k
RV302	1-241-763-11	s	RES, ADJ METAL 4.7k
RV401	1-241-765-11	s	RES, ADJ METAL 22k
RV402	1-241-763-11	s	RES, ADJ METAL 4.7k
RV501	1-241-761-11	s	RES, ADJ METAL 1k
RV571	1-241-760-11	s	RES, ADJ CARBON 470
RV601	1-241-761-11	s	RES, ADJ METAL 1k
RV602	1-241-628-11	s	RES, ADJ CARBON 2.2K
RV671	1-241-761-11	s	RES, ADJ METAL 1k
RV831	1-241-761-11	s	RES, ADJ METAL 1k
RV832	1-241-761-11	s	RES, ADJ METAL 1k
RV901	1-241-761-11	s	RES, ADJ METAL 1k
RV902	1-241-761-11	s	RES, ADJ METAL 1k
T2	1-427-667-11	s	TRANSFORMER, BIAS OSCILLATION
T101	1-433-330-11	s	TRANSFORMER, BIAS OSCILLATION
T102	1-406-349-11	s	TRANSFORMER, OSCILLATION
T201	1-433-330-11	s	TRANSFORMER, BIAS OSCILLATION
T202	1-406-349-11	s	TRANSFORMER, OSCILLATION
X831	1-579-995-12	s	RESONATOR, CERAMIC 17.734475MHz

VA-148C BOARD(SVP-5600P)

Ref. No. or Q'ty	Part No.	SP	Description
VA-148C board is used for SVP-5600P(EK).			
1pc	A-8265-882-A	o	MOUNTED CIRCUIT BOARD, VA-148C
1pc	3-179-084-01	s	LEVER (R), PC BOARD
1pc	3-179-085-01	s	LEVER (L), PC BOARD
C21	1-126-933-11	s	ELECT 100uF 20% 16V
C22	1-124-916-11	s	ELECT 22uF 20% 63V
C23	1-124-916-11	s	ELECT 22uF 20% 63V
C24	1-126-933-11	s	ELECT 100uF 20% 16V
C25	1-124-254-00	s	ELECT 0.68uF 20% 50V
C27	1-164-232-11	s	CERAMIC, CHIP 0.01uF 10% 100V
C28	1-126-933-11	s	ELECT 100uF 20% 16V
C29	1-163-038-91	s	CERAMIC, CHIP 0.1uF 25V
C30	1-124-916-11	s	ELECT 22uF 20% 63V
C31	1-163-227-11	s	CERAMIC, CHIP 10PF 5% 50V
C32	1-126-964-11	s	ELECT 10uF 20% 50V
C33	1-164-232-11	s	CERAMIC, CHIP 0.01uF 10% 100V
C34	1-124-927-11	s	ELECT 4.7uF 20% 100V
C35	1-126-964-11	s	ELECT 10uF 20% 50V
C36	1-126-964-11	s	ELECT 10uF 20% 50V
C37	1-124-126-00	s	ELECT 47uF 20% 25V
C38	1-124-239-00	s	ELECT 6.8uF 20% 25V
C39	1-163-275-11	s	CERAMIC, CHIP 0.001uF 5% 50V
C40-C44	1-164-004-11	s	CERAMIC, CHIP 0.1uF 10% 25V
C45	1-126-933-11	s	ELECT 100uF 20% 16V
C100	1-109-982-11	s	CERAMIC, CHIP 1uF 10% 10V
C101	1-163-275-11	s	CERAMIC, CHIP 0.001uF 5% 50V
C102	1-124-927-11	s	ELECT 4.7uF 20% 100V
C103	1-124-126-00	s	ELECT 47uF 20% 25V
C104	1-130-483-00	s	MYLAR 0.01uF 5% 50V
C106	1-124-903-11	s	ELECT 1uF 20% 50V
C108	1-124-916-11	s	ELECT 22uF 20% 63V
C109	1-126-964-11	s	ELECT 10uF 20% 50V
C110	1-124-927-11	s	ELECT 4.7uF 20% 100V
C111	1-164-182-11	s	CERAMIC, CHIP 3300PF 10% 100V
C112	1-124-927-11	s	ELECT 4.7uF 20% 100V
C113	1-126-933-11	s	ELECT 100uF 20% 16V
C114	1-131-587-11	s	TANTALUM 0.68uF 5% 35V
C119	1-124-126-00	s	ELECT 47uF 20% 25V
C120	1-164-004-11	s	CERAMIC, CHIP 0.1uF 10% 25V
C121	1-126-964-11	s	ELECT 10uF 20% 50V
C200	1-126-111-11	s	ELECT 3.3uF 20% 100V
C201	1-163-275-11	s	CERAMIC, CHIP 0.001uF 5% 50V
C202	1-124-927-11	s	ELECT 4.7uF 20% 100V
C203	1-124-126-00	s	ELECT 47uF 20% 25V
C204	1-130-483-00	s	MYLAR 0.01uF 5% 50V
C206	1-124-903-11	s	ELECT 1uF 20% 50V
C208	1-124-916-11	s	ELECT 22uF 20% 63V
C209	1-126-964-11	s	ELECT 10uF 20% 50V
C210	1-124-927-11	s	ELECT 4.7uF 20% 100V
C211	1-164-182-11	s	CERAMIC, CHIP 3300PF 10% 100V
C212	1-124-927-11	s	ELECT 4.7uF 20% 100V
C213	1-126-933-11	s	ELECT 100uF 20% 16V
C214	1-131-587-11	s	TANTALUM 0.68uF 5% 35V
C219	1-124-126-00	s	ELECT 47uF 20% 25V
C220	1-164-004-11	s	CERAMIC, CHIP 0.1uF 10% 25V
C221	1-126-964-11	s	ELECT 10uF 20% 50V
C301	1-126-111-11	s	ELECT 3.3uF 20% 100V
C302	1-130-473-00	s	MYLAR 0.0015uF 5% 50V

(VA-148C BOARD(SVP-5600P))

Ref. No. or Q'ty	Part No.	SP	Description
C303	1-126-964-11	s	ELECT 10uF 20% 50V
C304	1-126-964-11	s	ELECT 10uF 20% 50V
C305	1-124-927-11	s	ELECT 4.7uF 20% 100V
C306	1-130-487-00	s	MYLAR 0.022uF 5% 50V
C307	1-124-126-00	s	ELECT 47uF 20% 25V
C308	1-130-483-00	s	MYLAR 0.01uF 5% 50V
C309	1-130-477-00	s	MYLAR 0.0033uF 5% 50V
C310	1-163-135-00	s	CERAMIC, CHIP 560PF 5% 50V
C311	1-163-137-00	s	CERAMIC, CHIP 680PF 5% 50V
C312	1-163-135-00	s	CERAMIC, CHIP 560PF 5% 50V
C313	1-126-111-11	s	ELECT 3.3uF 20% 100V
C314	1-124-916-11	s	ELECT 22uF 20% 63V
C315	1-164-004-11	s	CERAMIC, CHIP 0.1uF 10% 25V
C316	1-164-004-11	s	CERAMIC, CHIP 0.1uF 10% 25V
C319	1-124-126-00	s	ELECT 47uF 20% 25V
C320	1-126-964-11	s	ELECT 10uF 20% 50V
C401	1-126-111-11	s	ELECT 3.3uF 20% 100V
C402	1-130-473-00	s	MYLAR 0.0015uF 5% 50V
C403	1-126-964-11	s	ELECT 10uF 20% 50V
C404	1-126-964-11	s	ELECT 10uF 20% 50V
C405	1-124-927-11	s	ELECT 4.7uF 20% 100V
C406	1-130-487-00	s	MYLAR 0.022uF 5% 50V
C407	1-124-126-00	s	ELECT 47uF 20% 25V
C408	1-130-483-00	s	MYLAR 0.01uF 5% 50V
C409	1-130-477-00	s	MYLAR 0.0033uF 5% 50V
C410	1-163-135-00	s	CERAMIC, CHIP 560PF 5% 50V
C411	1-163-137-00	s	CERAMIC, CHIP 680PF 5% 50V
C412	1-163-135-00	s	CERAMIC, CHIP 560PF 5% 50V
C413	1-126-111-11	s	ELECT 3.3uF 20% 100V
C414	1-124-916-11	s	ELECT 22uF 20% 63V
C415	1-164-004-11	s	CERAMIC, CHIP 0.1uF 10% 25V
C418	1-163-243-11	s	CERAMIC, CHIP 47PF 5% 50V
C419	1-124-126-00	s	ELECT 47uF 20% 25V
C420	1-126-964-11	s	ELECT 10uF 20% 50V
C501	1-163-809-11	s	CERAMIC, CHIP 0.047uF 10% 25V
C502	1-126-933-11	s	ELECT 100uF 20% 16V
C503	1-163-809-11	s	CERAMIC, CHIP 0.047uF 10% 25V
C504	1-126-933-11	s	ELECT 100uF 20% 16V
C505	1-163-809-11	s	CERAMIC, CHIP 0.047uF 10% 25V
C506	1-126-933-11	s	ELECT 100uF 20% 16V
C507	1-163-809-11	s	CERAMIC, CHIP 0.047uF 10% 25V
C508	1-126-933-11	s	ELECT 100uF 20% 16V
C509	1-163-809-11	s	CERAMIC, CHIP 0.047uF 10% 25V
C510	1-126-933-11	s	ELECT 100uF 20% 16V
C511	1-163-809-11	s	CERAMIC, CHIP 0.047uF 10% 25V
C512	1-126-933-11	s	ELECT 100uF 20% 16V
C513	1-163-809-11	s	CERAMIC, CHIP 0.047uF 10% 25V
C514	1-126-933-11	s	ELECT 100uF 20% 16V
C701	1-126-933-11	s	ELECT 100uF 20% 16V
C702	1-163-809-11	s	CERAMIC, CHIP 0.047uF 10% 25V
C703	1-124-126-00	s	ELECT 47uF 20% 25V
C704	1-163-037-11	s	CERAMIC, CHIP 0.022uF 10% 25V
C705	1-131-377-00	s	TANTALUM 10uF 10% 10V
C706	1-126-933-11	s	ELECT 100uF 20% 16V
C707	1-163-037-11	s	CERAMIC, CHIP 0.022uF 10% 25V
C708	1-164-489-11	s	CERAMIC, CHIP 0.22uF 10% 16V
C709	1-163-037-11	s	CERAMIC, CHIP 0.022uF 10% 25V
C710	1-163-037-11	s	CERAMIC, CHIP 0.022uF 10% 25V
C712	1-164-489-11	s	CERAMIC, CHIP 0.22uF 10% 16V

(VA-148C BOARD(SVP-5600P))

Ref. No. or Q'ty	Part No.	SP	Description
C713	1-164-489-11	s	CERAMIC, CHIP 0.22uF 10% 16V
C714	1-163-227-11	s	CERAMIC, CHIP 10PF 5% 50V
C715	1-163-108-00	s	CERAMIC, CHIP 43PF 5% 50V
C717	1-163-037-11	s	CERAMIC, CHIP 0.022uF 10% 25V
C718	1-163-037-11	s	CERAMIC, CHIP 0.022uF 10% 25V
C719	1-163-037-11	s	CERAMIC, CHIP 0.022uF 10% 25V
C720	1-163-809-11	s	CERAMIC, CHIP 0.047uF 10% 25V
C741	1-124-126-00	s	ELECT 47uF 20% 25V
C742	1-164-489-11	s	CERAMIC, CHIP 0.22uF 10% 16V
C743	1-126-933-11	s	ELECT 100uF 20% 16V
C744	1-126-933-11	s	ELECT 100uF 20% 16V
C746	1-163-809-11	s	CERAMIC, CHIP 0.047uF 10% 25V
C747	1-126-933-11	s	ELECT 100uF 20% 16V
C748	1-124-126-00	s	ELECT 47uF 20% 25V
C749	1-163-037-11	s	CERAMIC, CHIP 0.022uF 10% 25V
C750	1-163-133-00	s	CERAMIC, CHIP 470PF 5% 50V
C752	1-126-933-11	s	ELECT 100uF 20% 16V
C771	1-163-037-11	s	CERAMIC, CHIP 0.022uF 10% 25V
C772	1-163-037-11	s	CERAMIC, CHIP 0.022uF 10% 25V
C773	1-163-038-91	s	CERAMIC, CHIP 0.1uF 25V
C774	1-163-037-11	s	CERAMIC, CHIP 0.022uF 10% 25V
C776	1-163-809-11	s	CERAMIC, CHIP 0.047uF 10% 25V
C777	1-163-037-11	s	CERAMIC, CHIP 0.022uF 10% 25V
C778	1-124-126-00	s	ELECT 47uF 20% 25V
C779	1-163-037-11	s	CERAMIC, CHIP 0.022uF 10% 25V
C781	1-164-004-11	s	CERAMIC, CHIP 0.1uF 10% 25V
C782	1-164-004-11	s	CERAMIC, CHIP 0.1uF 10% 25V
C808	1-126-964-11	s	ELECT 10uF 20% 50V
C818	1-163-243-11	s	CERAMIC, CHIP 47PF 5% 50V
C831	1-126-933-11	s	ELECT 100uF 20% 16V
C832	1-163-809-11	s	CERAMIC, CHIP 0.047uF 10% 25V
C834	1-163-037-11	s	CERAMIC, CHIP 0.022uF 10% 25V
C835	1-163-809-11	s	CERAMIC, CHIP 0.047uF 10% 25V
C836	1-124-126-00	s	ELECT 47uF 20% 25V
C837	1-126-111-11	s	ELECT 3.3uF 20% 100V
C839	1-126-933-11	s	ELECT 100uF 20% 16V
C840	1-126-933-11	s	ELECT 100uF 20% 16V
C841	1-163-235-11	s	CERAMIC, CHIP 22PF 5% 50V
C842	1-126-964-11	s	ELECT 10uF 20% 50V
C843	1-124-927-11	s	ELECT 4.7uF 20% 100V
C844	1-163-037-11	s	CERAMIC, CHIP 0.022uF 10% 25V
C845	1-163-037-11	s	CERAMIC, CHIP 0.022uF 10% 25V
C846	1-126-933-11	s	ELECT 100uF 20% 16V
C847	1-163-237-11	s	CERAMIC, CHIP 27PF 5% 50V
C848	1-164-232-11	s	CERAMIC, CHIP 0.01uF 10% 100V
C849	1-107-823-11	s	CERAMIC, CHIP 0.47uF 10% 16V
C850	1-163-235-11	s	CERAMIC, CHIP 22PF 5% 50V
C851	1-163-037-11	s	CERAMIC, CHIP 0.022uF 10% 25V
C852	1-163-019-00	s	CERAMIC, CHIP 0.0068uF 10% 50V
C853	1-109-982-11	s	CERAMIC, CHIP 1uF 10% 10V
C854	1-109-982-11	s	CERAMIC, CHIP 1uF 10% 10V
C855	1-163-125-00	s	CERAMIC, CHIP 220PF 5% 50V
C856	1-164-232-11	s	CERAMIC, CHIP 0.01uF 10% 100V
C901	1-124-126-00	s	ELECT 47uF 20% 25V
C902	1-163-037-11	s	CERAMIC, CHIP 0.022uF 10% 25V
C903	1-126-934-11	s	ELECT 220uF 20% 16V
C904	1-163-809-11	s	CERAMIC, CHIP 0.047uF 10% 25V
C905	1-126-934-11	s	ELECT 220uF 20% 16V
C906	1-163-087-00	s	CERAMIC, CHIP 4PF 50V

(VA-148C BOARD(SVP-5600P))

Ref. No. or Q'ty	Part No.	SP	Description
C907	1-163-809-11	s	CERAMIC, CHIP 0.047uF 10% 25V
C908	1-163-087-00	s	CERAMIC, CHIP 4PF 50V
C909	1-124-126-00	s	ELECT 47uF 20% 25V
C910	1-126-964-11	s	ELECT 10uF 20% 50V
C911	1-124-126-00	s	ELECT 47uF 20% 25V
C912	1-126-933-11	s	ELECT 100uF 20% 16V
C913	1-126-933-11	s	ELECT 100uF 20% 16V
C914	1-163-809-11	s	CERAMIC, CHIP 0.047uF 10% 25V
C915	1-163-809-11	s	CERAMIC, CHIP 0.047uF 10% 25V
C918	1-124-126-00	s	ELECT 47uF 20% 25V
C919	1-163-037-11	s	CERAMIC, CHIP 0.022uF 10% 25V
C920	1-126-964-11	s	ELECT 10uF 20% 50V
CN1	1-564-002-41	s	CONNECTOR 3P, MALE
CN2	1-506-468-11	s	CONNECTOR 3P, MALE
CN501	1-766-793-11	o	CONNECTOR, DIN 64P, MALE
CN502	1-766-793-11	o	CONNECTOR, DIN 64P, MALE
CV841	1-141-424-11	s	CAP, TRIMMER, CHIP 30pF
D6	8-719-801-78	s	DIODE 1S2837-T1
D7	8-719-801-78	s	DIODE 1S2837-T1
D8	8-719-800-76	s	DIODE 1SS226
D9	8-719-801-78	s	DIODE 1S2837-T1
D10	8-719-801-78	s	DIODE 1S2837-T1
D11	8-719-801-78	s	DIODE 1S2837-T1
D12	8-719-104-34	s	DIODE 1S2835
D14	8-719-801-78	s	DIODE 1S2837-T1
D101	8-719-801-78	s	DIODE 1S2837-T1
D201	8-719-801-78	s	DIODE 1S2837-T1
D741	8-719-018-80	s	DIODE ND411G-2-T1
D742	8-719-018-80	s	DIODE ND411G-2-T1
D771	8-719-018-80	s	DIODE ND411G-2-T1
D772	8-719-018-80	s	DIODE ND411G-2-T1
D831	8-719-800-76	s	DIODE 1SS226
D832	8-719-801-78	s	DIODE 1S2837-T1
D841	8-719-801-78	s	DIODE 1S2837-T1
FL101	1-239-008-11	s	FILTER, LOW-PASS 13KHz
FL201	1-239-008-11	s	FILTER, LOW-PASS 13KHz
IC3	8-759-160-54	s	IC XLH7772KS-VP
IC4	8-759-711-82	s	IC NJM4580E(T2)
IC5	8-759-300-71	s	IC HD14053BFP
IC6	8-759-009-06	s	IC MC14052BF
IC7	8-759-700-43	s	IC NJM4558M
IC8	8-759-068-03	s	IC NJM79L09UA(TE1)
IC9	8-759-700-43	s	IC NJM4558M
IC101	8-759-805-20	s	IC LA7297
IC102	8-752-032-14	s	IC CXA1102M-T4
IC201	8-759-805-20	s	IC LA7297
IC202	8-752-032-14	s	IC CXA1102M-T4
IC301	8-759-603-27	s	IC M5201FP
IC302	8-759-700-43	s	IC NJM4558M
IC401	8-759-603-27	s	IC M5201FP
IC501	8-759-182-84	s	IC PQ05SZ5U
IC502	8-759-172-41	s	IC L78M09T-TL
IC503	8-759-822-95	s	IC L79M05T-FA
IC504	8-759-172-41	s	IC L78M09T-TL
IC701	8-752-039-13	s	IC CXA1413L
IC831	8-759-710-07	s	IC NJM2234M

(VA-148C BOARD(SVP-5600P))

Ref. No. or Q'ty	Part No.	SP	Description
IC832	8-759-256-44	s	IC NJM2235M-TE2
IC833	8-759-285-16	s	IC LC74760M-9070-TLM
IC901	8-759-262-03	s	IC MC14577CFEL
IC902	8-759-262-00	s	IC MC14576CFEL
IC903	8-759-262-00	s	IC MC14576CFEL
L11	1-410-482-31	s	INDUCTOR 100uH
L12	1-410-482-31	s	INDUCTOR 100uH
L13	1-410-482-31	s	INDUCTOR 100uH
L701	1-410-482-31	s	INDUCTOR 100uH
L702	1-410-471-11	s	INDUCTOR 12uH
L703	1-408-414-00	s	INDUCTOR 27uH
L741	1-410-478-11	s	INDUCTOR 47uH
L771	1-410-470-11	s	INDUCTOR 10uH
L831	1-410-482-31	s	INDUCTOR 100uH
L841	1-408-406-00	s	INDUCTOR 5.6uH
L901	1-410-482-31	s	INDUCTOR 100uH
L902	1-410-482-31	s	INDUCTOR 100uH
L903	1-410-482-31	s	INDUCTOR 100uH
L904	1-410-482-31	s	INDUCTOR 100uH
Q2	8-729-901-06	s	TRANSISTOR DTA144EK
Q4	8-729-202-38	s	TRANSISTOR 2SC3326N
Q5	8-729-901-06	s	TRANSISTOR DTA144EK
Q6	8-729-901-06	s	TRANSISTOR DTA144EK
Q15	8-729-202-38	s	TRANSISTOR 2SC3326N
Q16	8-729-202-38	s	TRANSISTOR 2SC3326N
Q20	8-729-320-60	s	TRANSISTOR 2SD788-34
Q21	8-729-140-93	s	TRANSISTOR 2SB733-34
Q23	8-729-216-22	s	TRANSISTOR 2SA1162
Q24	8-729-901-06	s	TRANSISTOR DTA144EK
Q25	8-729-901-01	s	TRANSISTOR DTC144EK
Q26	8-729-901-01	s	TRANSISTOR DTC144EK
Q27	8-729-230-49	s	TRANSISTOR 2SC2712-YG
Q101	8-729-901-01	s	TRANSISTOR DTC144EK
Q103	8-729-920-48	s	TRANSISTOR IMH2-T110
Q201	8-729-901-01	s	TRANSISTOR DTC144EK
Q203	8-729-920-48	s	TRANSISTOR IMH2-T110
Q302	8-729-202-38	s	TRANSISTOR 2SC3326N
Q303	8-729-907-26	s	TRANSISTOR IMX1
Q304	8-729-907-26	s	TRANSISTOR IMX1
Q402	8-729-202-38	s	TRANSISTOR 2SC3326N
Q701	8-729-901-01	s	TRANSISTOR DTC144EK
Q702	8-729-907-26	s	TRANSISTOR IMX1
Q704	8-729-230-49	s	TRANSISTOR 2SC2712-YG
Q705	8-729-230-49	s	TRANSISTOR 2SC2712-YG
Q706	8-729-230-49	s	TRANSISTOR 2SC2712-YG
Q707	8-729-230-49	s	TRANSISTOR 2SC2712-YG
Q708	8-729-903-10	s	TRANSISTOR FMW1
Q709	8-729-923-06	s	TRANSISTOR FMW8
Q710	8-729-230-49	s	TRANSISTOR 2SC2712-YG
Q711	8-729-903-10	s	TRANSISTOR FMW1
Q712	8-729-923-06	s	TRANSISTOR FMW8
Q713	8-729-216-22	s	TRANSISTOR 2SA1162
Q741	8-729-907-26	s	TRANSISTOR IMX1
Q744	8-729-920-48	s	TRANSISTOR IMH2-T110
Q745	8-729-907-26	s	TRANSISTOR IMX1
Q746	8-729-230-49	s	TRANSISTOR 2SC2712-YG
Q747	8-729-923-06	s	TRANSISTOR FMW8
Q748	8-729-903-10	s	TRANSISTOR FMW1
Q771	8-729-907-26	s	TRANSISTOR IMX1

(VA-148C BOARD(SVP-5600P))

Ref. No. or Q'ty	Part No.	SP	Description
Q773	8-729-119-78	s	TRANSISTOR 2SC2785-HFE
Q774	8-729-901-01	s	TRANSISTOR DTC144EK
Q775	8-729-907-26	s	TRANSISTOR IMX1
Q776	8-729-230-49	s	TRANSISTOR 2SC2712-YG
Q777	8-729-923-06	s	TRANSISTOR FMW8
Q778	8-729-903-10	s	TRANSISTOR FMW1
Q806	8-729-901-01	s	TRANSISTOR DTC144EK
Q807	8-729-901-01	s	TRANSISTOR DTC144EK
Q831	8-729-907-26	s	TRANSISTOR IMX1
Q833	8-729-230-49	s	TRANSISTOR 2SC2712-YG
Q834	8-729-907-26	s	TRANSISTOR IMX1
Q901	8-729-901-01	s	TRANSISTOR DTC144EK
Q902	8-729-901-01	s	TRANSISTOR DTC144EK
R1	1-216-065-00	s	METAL, CHIP 4.7K 5% 1/10W
R2	1-216-057-00	s	METAL, CHIP 2.2K 5% 1/10W
R3	1-216-089-00	s	METAL, CHIP 47K 5% 1/10W
R5	1-216-089-00	s	METAL, CHIP 47K 5% 1/10W
R6	1-216-089-00	s	METAL, CHIP 47K 5% 1/10W
R31	1-249-417-11	s	CARBON 1K 5% 1/4W
R34	1-216-065-00	s	METAL, CHIP 4.7K 5% 1/10W
R35	1-216-065-00	s	METAL, CHIP 4.7K 5% 1/10W
R36	1-216-057-00	s	METAL, CHIP 2.2K 5% 1/10W
R37	1-216-057-00	s	METAL, CHIP 2.2K 5% 1/10W
R38	1-216-065-00	s	METAL, CHIP 4.7K 5% 1/10W
R39	1-216-085-00	s	METAL, CHIP 33K 5% 1/10W
R40	1-216-105-91	s	METAL, CHIP 220K 5% 1/10W
R41	1-216-077-00	s	METAL, CHIP 15K 5% 1/10W
R42	1-216-069-00	s	METAL, CHIP 6.8K 5% 1/10W
R43	1-216-121-00	s	METAL, CHIP 1M 5% 1/10W
R44	1-216-089-00	s	METAL, CHIP 47K 5% 1/10W
R45	1-216-081-00	s	METAL, CHIP 22K 5% 1/10W
R46	1-216-661-11	s	METAL, CHIP 2.7K 0.5% 1/10W
R49	1-216-675-11	s	METAL, CHIP 10K 0.5% 1/10W
R52	1-216-097-00	s	METAL, CHIP 100K 5% 1/10W
R53	1-216-101-00	s	METAL, CHIP 150K 5% 1/10W
R54	1-216-065-00	s	METAL, CHIP 4.7K 5% 1/10W
R55	1-216-033-00	s	METAL, CHIP 220 5% 1/10W
R56	1-216-073-00	s	METAL, CHIP 10K 5% 1/10W
R57	1-216-061-00	s	METAL, CHIP 3.3K 5% 1/10W
R58	1-216-061-00	s	METAL, CHIP 3.3K 5% 1/10W
R59	1-216-061-00	s	METAL, CHIP 3.3K 5% 1/10W
R60	1-216-053-00	s	METAL, CHIP 1.5K 5% 1/10W
R61	1-216-073-00	s	METAL, CHIP 10K 5% 1/10W
R62	1-216-073-00	s	METAL, CHIP 10K 5% 1/10W
R63	1-216-073-00	s	METAL, CHIP 10K 5% 1/10W
R64	1-216-073-00	s	METAL, CHIP 10K 5% 1/10W
R65	1-216-089-00	s	METAL, CHIP 47K 5% 1/10W
R66	1-216-029-00	s	METAL, CHIP 150 5% 1/10W
R67	1-216-073-00	s	METAL, CHIP 10K 5% 1/10W
R68	1-220-266-11	s	METAL, CHIP 56 5% 1/2W
R100	1-216-073-00	s	METAL, CHIP 10K 5% 1/10W
R101	1-216-295-91	s	RES, CHIP 0
R102	1-216-097-00	s	METAL, CHIP 100K 5% 1/10W
R103	1-216-001-00	s	METAL, CHIP 10 5% 1/10W
R104	1-216-085-00	s	METAL, CHIP 33K 5% 1/10W
R105	1-216-089-00	s	METAL, CHIP 47K 5% 1/10W
R106	1-216-109-00	s	METAL, CHIP 330K 5% 1/10W
R107	1-216-025-00	s	METAL, CHIP 100 5% 1/10W

(VA-148C BOARD(SVP-5600P))

Ref. No. or Q'ty	Part No.	SP	Description
R109	1-216-077-00	s	METAL, CHIP 15K 5% 1/10W
R110	1-216-057-00	s	METAL, CHIP 2.2K 5% 1/10W
R111	1-216-045-00	s	METAL, CHIP 680 5% 1/10W
R113	1-216-121-00	s	METAL, CHIP 1M 5% 1/10W
R114	1-216-073-00	s	METAL, CHIP 10K 5% 1/10W
R117	1-216-663-11	s	METAL, CHIP 3.3K 0.5% 1/10W
R118	1-216-662-11	s	METAL, CHIP 3K 0.5% 1/10W
R119	1-216-641-11	s	METAL, CHIP 390 0.5% 1/10W
R120	1-216-690-11	s	METAL, CHIP 43K 0.5% 1/10W
R121	1-216-065-00	s	METAL, CHIP 4.7K 5% 1/10W
R131	1-216-049-00	s	METAL, CHIP 1K 5% 1/10W
R145	1-216-065-00	s	METAL, CHIP 4.7K 5% 1/10W
R200	1-216-089-00	s	METAL, CHIP 47K 5% 1/10W
R201	1-216-295-91	s	RES, CHIP 0
R202	1-216-097-00	s	METAL, CHIP 100K 5% 1/10W
R203	1-216-001-00	s	METAL, CHIP 10 5% 1/10W
R204	1-216-085-00	s	METAL, CHIP 33K 5% 1/10W
R205	1-216-049-00	s	METAL, CHIP 1K 5% 1/10W
R206	1-216-109-00	s	METAL, CHIP 330K 5% 1/10W
R207	1-216-025-00	s	METAL, CHIP 100 5% 1/10W
R209	1-216-077-00	s	METAL, CHIP 15K 5% 1/10W
R210	1-216-057-00	s	METAL, CHIP 2.2K 5% 1/10W
R211	1-216-045-00	s	METAL, CHIP 680 5% 1/10W
R213	1-216-121-00	s	METAL, CHIP 1M 5% 1/10W
R214	1-216-073-00	s	METAL, CHIP 10K 5% 1/10W
R217	1-216-663-11	s	METAL, CHIP 3.3K 0.5% 1/10W
R218	1-216-662-11	s	METAL, CHIP 3K 0.5% 1/10W
R219	1-216-641-11	s	METAL, CHIP 390 0.5% 1/10W
R220	1-216-690-11	s	METAL, CHIP 43K 0.5% 1/10W
R221	1-216-065-00	s	METAL, CHIP 4.7K 5% 1/10W
R231	1-216-049-00	s	METAL, CHIP 1K 5% 1/10W
R265	1-216-049-00	s	METAL, CHIP 1K 5% 1/10W
R301	1-216-081-00	s	METAL, CHIP 22K 5% 1/10W
R303	1-216-061-00	s	METAL, CHIP 3.3K 5% 1/10W
R304	1-216-067-00	s	METAL, CHIP 5.6K 5% 1/10W
R305	1-216-049-00	s	METAL, CHIP 1K 5% 1/10W
R306	1-216-683-11	s	METAL, CHIP 22K 0.5% 1/10W
R307	1-216-105-91	s	METAL, CHIP 220K 5% 1/10W
R308	1-216-085-00	s	METAL, CHIP 33K 5% 1/10W
R309	1-208-811-11	s	METAL, CHIP 16K 0.5% 1/10W
R311	1-216-073-00	s	METAL, CHIP 10K 5% 1/10W
R312	1-216-667-11	s	METAL, CHIP 4.7K 0.5% 1/10W
R313	1-216-081-00	s	METAL, CHIP 22K 5% 1/10W
R314	1-216-059-00	s	METAL, CHIP 2.7K 5% 1/10W
R315	1-216-061-00	s	METAL, CHIP 3.3K 5% 1/10W
R316	1-216-013-00	s	METAL, CHIP 33 5% 1/10W
R317	1-216-081-00	s	METAL, CHIP 22K 5% 1/10W
R318	1-216-089-00	s	METAL, CHIP 47K 5% 1/10W
R319	1-216-057-00	s	METAL, CHIP 2.2K 5% 1/10W
R320	1-216-073-00	s	METAL, CHIP 10K 5% 1/10W
R321	1-216-081-00	s	METAL, CHIP 22K 5% 1/10W
R322	1-216-065-00	s	METAL, CHIP 4.7K 5% 1/10W
R401	1-216-081-00	s	METAL, CHIP 22K 5% 1/10W
R403	1-216-061-00	s	METAL, CHIP 3.3K 5% 1/10W
R404	1-216-067-00	s	METAL, CHIP 5.6K 5% 1/10W
R405	1-216-049-00	s	METAL, CHIP 1K 5% 1/10W
R406	1-216-683-11	s	METAL, CHIP 22K 0.5% 1/10W
R407	1-216-105-91	s	METAL, CHIP 220K 5% 1/10W
R408	1-216-085-00	s	METAL, CHIP 33K 5% 1/10W

(VA-148C BOARD(SVP-5600P))

Ref. No. or Q'ty	Part No.	SP	Description
R409	1-216-075-00	s	METAL, CHIP 12K 5% 1/10W
R411	1-216-073-00	s	METAL, CHIP 10K 5% 1/10W
R412	1-216-667-11	s	METAL, CHIP 4.7K 0.5% 1/10W
R413	1-216-081-00	s	METAL, CHIP 22K 5% 1/10W
R414	1-216-059-00	s	METAL, CHIP 2.7K 5% 1/10W
R415	1-216-061-00	s	METAL, CHIP 3.3K 5% 1/10W
R416	1-216-013-00	s	METAL, CHIP 33 5% 1/10W
R417	1-216-081-00	s	METAL, CHIP 22K 5% 1/10W
R418	1-216-089-00	s	METAL, CHIP 47K 5% 1/10W
R419	1-216-057-00	s	METAL, CHIP 2.2K 5% 1/10W
R420	1-216-073-00	s	METAL, CHIP 10K 5% 1/10W
R421	1-216-081-00	s	METAL, CHIP 22K 5% 1/10W
R422	1-216-065-00	s	METAL, CHIP 4.7K 5% 1/10W
R701	1-216-073-00	s	METAL, CHIP 10K 5% 1/10W
R703	1-216-073-00	s	METAL, CHIP 10K 5% 1/10W
R704	1-216-647-11	s	METAL, CHIP 680 0.5% 1/10W
R705	1-216-041-00	s	METAL, CHIP 470 5% 1/10W
R706	1-216-666-11	s	METAL, CHIP 4.3K 0.5% 1/10W
R707	1-216-651-11	s	METAL, CHIP 1K 0.5% 1/10W
R708	1-216-049-00	s	METAL, CHIP 1K 5% 1/10W
R709	1-216-661-11	s	METAL, CHIP 2.7K 0.5% 1/10W
R710	1-216-081-00	s	METAL, CHIP 22K 5% 1/10W
R711	1-216-077-00	s	METAL, CHIP 15K 5% 1/10W
R712	1-216-049-00	s	METAL, CHIP 1K 5% 1/10W
R713	1-216-049-00	s	METAL, CHIP 1K 5% 1/10W
R714	1-216-655-11	s	METAL, CHIP 1.5K 0.5% 1/10W
R715	1-216-627-11	s	METAL, CHIP 100 0.5% 1/10W
R716	1-216-081-00	s	METAL, CHIP 22K 5% 1/10W
R717	1-216-073-00	s	METAL, CHIP 10K 5% 1/10W
R718	1-216-651-11	s	METAL, CHIP 1K 0.5% 1/10W
R719	1-216-651-11	s	METAL, CHIP 1K 0.5% 1/10W
R720	1-208-774-11	s	METAL, CHIP 470 0.50% 1/10W
R721	1-216-651-11	s	METAL, CHIP 1K 0.5% 1/10W
R722	1-216-045-00	s	METAL, CHIP 680 5% 1/10W
R723	1-208-774-11	s	METAL, CHIP 470 0.50% 1/10W
R724	1-216-647-11	s	METAL, CHIP 680 0.5% 1/10W
R725	1-216-651-11	s	METAL, CHIP 1K 0.5% 1/10W
R726	1-216-651-11	s	METAL, CHIP 1K 0.5% 1/10W
R727	1-216-045-00	s	METAL, CHIP 680 5% 1/10W
R728	1-216-651-11	s	METAL, CHIP 1K 0.5% 1/10W
R729	1-216-651-11	s	METAL, CHIP 1K 0.5% 1/10W
R730	1-216-651-11	s	METAL, CHIP 1K 0.5% 1/10W
R731	1-216-645-11	s	METAL, CHIP 560 0.5% 1/10W
R732	1-216-660-11	s	METAL, CHIP 2.4K 0.5% 1/10W
R741	1-216-033-00	s	METAL, CHIP 220 5% 1/10W
R742	1-216-073-00	s	METAL, CHIP 10K 5% 1/10W
R743	1-216-041-00	s	METAL, CHIP 470 5% 1/10W
R744	1-208-774-11	s	METAL, CHIP 470 0.50% 1/10W
R745	1-216-049-00	s	METAL, CHIP 1K 5% 1/10W
R746	1-216-053-00	s	METAL, CHIP 1.5K 5% 1/10W
R747	1-208-784-11	s	METAL, CHIP 1.2K 0.50% 1/10W
R748	1-208-774-11	s	METAL, CHIP 470 0.50% 1/10W
R749	1-216-015-00	s	METAL 39 5% 1/10W
R750	1-208-784-11	s	METAL, CHIP 1.2K 0.50% 1/10W
R751	1-208-784-11	s	METAL, CHIP 1.2K 0.50% 1/10W
R753	1-216-041-00	s	METAL, CHIP 470 5% 1/10W
R754	1-216-671-11	s	METAL, CHIP 6.8K 0.5% 1/10W
R755	1-216-635-11	s	METAL, CHIP 220 0.5% 1/10W
R756	1-216-647-11	s	METAL, CHIP 680 0.5% 1/10W

(VA-148C BOARD(SVP-5600P))

Ref. No. or Q'ty	Part No.	SP	Description
R757	1-216-647-11	s	METAL, CHIP 680 0.5% 1/10W
R758	1-216-622-11	s	METAL, CHIP 62 0.5% 1/10W
R759	1-216-647-11	s	METAL, CHIP 680 0.5% 1/10W
R760	1-216-049-00	s	METAL, CHIP 1K 5% 1/10W
R761	1-216-081-00	s	METAL, CHIP 22K 5% 1/10W
R762	1-216-075-00	s	METAL, CHIP 12K 5% 1/10W
R763	1-216-057-00	s	METAL, CHIP 2.2K 5% 1/10W
R770	1-216-660-11	s	METAL, CHIP 2.4K 0.5% 1/10W
R771	1-216-033-00	s	METAL, CHIP 220 5% 1/10W
R772	1-216-073-00	s	METAL, CHIP 10K 5% 1/10W
R773	1-216-049-00	s	METAL, CHIP 1K 5% 1/10W
R774	1-216-627-11	s	METAL, CHIP 100 0.5% 1/10W
R775	1-216-049-00	s	METAL, CHIP 1K 5% 1/10W
R776	1-216-053-00	s	METAL, CHIP 1.5K 5% 1/10W
R777	1-208-784-11	s	METAL, CHIP 1.2K 0.50% 1/10W
R778	1-208-774-11	s	METAL, CHIP 470 0.50% 1/10W
R780	1-208-784-11	s	METAL, CHIP 1.2K 0.50% 1/10W
R781	1-208-784-11	s	METAL, CHIP 1.2K 0.50% 1/10W
R782	1-216-057-00	s	METAL, CHIP 2.2K 5% 1/10W
R783	1-216-645-11	s	METAL, CHIP 560 0.5% 1/10W
R784	1-216-655-11	s	METAL, CHIP 1.5K 0.5% 1/10W
R787	1-216-647-11	s	METAL, CHIP 680 0.5% 1/10W
R788	1-216-625-11	s	METAL, CHIP 82 0.5% 1/10W
R789	1-216-647-11	s	METAL, CHIP 680 0.5% 1/10W
R790	1-216-049-00	s	METAL, CHIP 1K 5% 1/10W
R791	1-216-081-00	s	METAL, CHIP 22K 5% 1/10W
R792	1-216-075-00	s	METAL, CHIP 12K 5% 1/10W
R793	1-216-057-00	s	METAL, CHIP 2.2K 5% 1/10W
R809	1-216-295-91	s	RES, CHIP 0
R810	1-216-065-00	s	METAL, CHIP 4.7K 5% 1/10W
R822	1-216-041-00	s	METAL, CHIP 470 5% 1/10W
R830	1-208-800-11	s	METAL, CHIP 5.6K 0.5% 1/10W
R832	1-216-041-00	s	METAL, CHIP 470 5% 1/10W
R833	1-216-041-00	s	METAL, CHIP 470 5% 1/10W
R834	1-216-073-00	s	METAL, CHIP 10K 5% 1/10W
R835	1-216-049-00	s	METAL, CHIP 1K 5% 1/10W
R836	1-216-049-00	s	METAL, CHIP 1K 5% 1/10W
R838	1-216-081-00	s	METAL, CHIP 22K 5% 1/10W
R839	1-216-073-00	s	METAL, CHIP 10K 5% 1/10W
R841	1-216-667-11	s	METAL, CHIP 4.7K 0.5% 1/10W
R843	1-216-057-00	s	METAL, CHIP 2.2K 5% 1/10W
R845	1-216-079-00	s	METAL, CHIP 18K 5% 1/10W
R846	1-216-081-00	s	METAL, CHIP 22K 5% 1/10W
R847	1-216-077-00	s	METAL, CHIP 15K 5% 1/10W
R849	1-216-041-00	s	METAL, CHIP 470 5% 1/10W
R850	1-216-295-91	s	RES, CHIP 0
R851	1-216-295-91	s	RES, CHIP 0
R852	1-216-073-00	s	METAL, CHIP 10K 5% 1/10W
R853	1-216-089-00	s	METAL, CHIP 47K 5% 1/10W
R854	1-216-053-00	s	METAL, CHIP 1.5K 5% 1/10W
R855	1-216-069-00	s	METAL, CHIP 6.8K 5% 1/10W
R856	1-216-051-00	s	METAL, CHIP 1.2K 5% 1/10W
R857	1-216-049-00	s	METAL, CHIP 1K 5% 1/10W
R859	1-216-121-00	s	METAL, CHIP 1M 5% 1/10W
R862	1-216-097-00	s	METAL, CHIP 100K 5% 1/10W
R863	1-216-089-00	s	METAL, CHIP 47K 5% 1/10W
R901	1-216-073-00	s	METAL, CHIP 10K 5% 1/10W
R902	1-216-073-00	s	METAL, CHIP 10K 5% 1/10W
R903	1-216-049-00	s	METAL, CHIP 1K 5% 1/10W

(VA-148C BOARD(SVP-5600P))

Ref. No. or Q'ty	Part No.	SP	Description
R904	1-216-049-00	s	METAL, CHIP 1K 5% 1/10W
R905	1-216-041-00	s	METAL, CHIP 470 5% 1/10W
R906	1-216-624-11	s	METAL, CHIP 75 0.5% 1/10W
R907	1-216-073-00	s	METAL, CHIP 10K 5% 1/10W
R908	1-216-624-11	s	METAL, CHIP 75 0.5% 1/10W
R909	1-216-061-00	s	METAL, CHIP 3.3K 5% 1/10W
R910	1-216-089-00	s	METAL, CHIP 47K 5% 1/10W
R911	1-216-073-00	s	METAL, CHIP 10K 5% 1/10W
R912	1-216-041-00	s	METAL, CHIP 470 5% 1/10W
R913	1-216-624-11	s	METAL, CHIP 75 0.5% 1/10W
R915	1-216-073-00	s	METAL, CHIP 10K 5% 1/10W
R916	1-216-073-00	s	METAL, CHIP 10K 5% 1/10W
R917	1-216-624-11	s	METAL, CHIP 75 0.5% 1/10W
R918	1-216-675-11	s	METAL, CHIP 10K 0.5% 1/10W
R919	1-216-624-11	s	METAL, CHIP 75 0.5% 1/10W
R920	1-216-624-11	s	METAL, CHIP 75 0.5% 1/10W
R921	1-216-073-00	s	METAL, CHIP 10K 5% 1/10W
R922	1-216-061-00	s	METAL, CHIP 3.3K 5% 1/10W
R923	1-216-089-00	s	METAL, CHIP 47K 5% 1/10W
R924	1-208-775-11	s	METAL, CHIP 510 0.50% 1/10W
RB801	1-236-908-11	s	RESISTOR BLOCK, CHIP 10Kx4
RB802	1-239-412-11	s	RESISTOR BLOCK, CHIP 100x4
RB803	1-239-412-11	s	RESISTOR BLOCK, CHIP 100x4
RV1	1-241-630-11	s	RES, ADJ CARBON 10K
RV103	1-241-786-11	s	RES, ADJ METAL 22k
RV105	1-241-786-11	s	RES, ADJ METAL 22k
RV203	1-241-786-11	s	RES, ADJ METAL 22k
RV205	1-241-786-11	s	RES, ADJ METAL 22k
RV301	1-241-765-11	s	RES, ADJ METAL 22k
RV302	1-241-763-11	s	RES, ADJ METAL 4.7k
RV401	1-241-765-11	s	RES, ADJ METAL 22k
RV402	1-241-763-11	s	RES, ADJ METAL 4.7k
RV831	1-241-761-11	s	RES, ADJ METAL 1k
RV832	1-241-761-11	s	RES, ADJ METAL 1k
RV901	1-241-761-11	s	RES, ADJ METAL 1k
RV902	1-241-761-11	s	RES, ADJ METAL 1k
X831	1-579-995-12	s	RESONATOR, CERAMIC 17.734475MHz

VO-47A BOARD(SVO-5800P)

Ref. No. or Q'ty	Part No.	SP	Description
VO-47A board is used for SVO-5800P(EK).			
1pc	A-8265-871-A	o	MOUNTED CIRCUIT BOARD, VO-47A
1pc	3-179-084-01	s	LEVER (R), PC BOARD
1pc	3-179-085-01	s	LEVER (L), PC BOARD
C1	1-163-809-11	s	CERAMIC, CHIP 0.047uF 10% 25V
C2	1-163-809-11	s	CERAMIC, CHIP 0.047uF 10% 25V
C3	1-126-933-11	s	ELECT 100uF 20% 16V
C4	1-126-933-11	s	ELECT 100uF 20% 16V
C5	1-163-809-11	s	CERAMIC, CHIP 0.047uF 10% 25V
C6	1-163-809-11	s	CERAMIC, CHIP 0.047uF 10% 25V
C7	1-126-933-11	s	ELECT 100uF 20% 16V
C10	1-163-237-11	s	CERAMIC, CHIP 27PF 5% 50V
C11	1-126-933-11	s	ELECT 100uF 20% 16V
C12	1-163-809-11	s	CERAMIC, CHIP 0.047uF 10% 25V
C13	1-163-251-11	s	CERAMIC, CHIP 100PF 5% 50V
C14	1-163-136-00	s	CERAMIC, CHIP 620PF 5% 50V
C15	1-163-249-11	s	CERAMIC, CHIP 82pF 5% 50V
C16	1-163-139-00	s	CERAMIC, CHIP 820PF 5% 50V
C17	1-163-125-00	s	CERAMIC, CHIP 220PF 5% 50V
C18	1-163-251-11	s	CERAMIC, CHIP 100PF 5% 50V
C19	1-163-241-11	s	CERAMIC, CHIP 39PF 5% 50V
C20	1-163-097-00	s	CERAMIC, CHIP 15PF 5% 50V
C21	1-109-982-11	s	CERAMIC, CHIP 1uF 10% 10V
C22	1-164-232-11	s	CERAMIC, CHIP 0.01uF 10% 100V
C23	1-164-232-11	s	CERAMIC, CHIP 0.01uF 10% 100V
C24	1-164-232-11	s	CERAMIC, CHIP 0.01uF 10% 100V
C25	1-163-037-11	s	CERAMIC, CHIP 0.022uF 10% 25V
C26-C30	1-164-232-11	s	CERAMIC, CHIP 0.01uF 10% 100V
C31	1-109-982-11	s	CERAMIC, CHIP 1uF 10% 10V
C32	1-164-182-11	s	CERAMIC, CHIP 3300PF 10% 100V
C33	1-164-232-11	s	CERAMIC, CHIP 0.01uF 10% 100V
C34	1-126-933-11	s	ELECT 100uF 20% 16V
C35	1-163-809-11	s	CERAMIC, CHIP 0.047uF 10% 25V
C36	1-164-232-11	s	CERAMIC, CHIP 0.01uF 10% 100V
C37	1-164-232-11	s	CERAMIC, CHIP 0.01uF 10% 100V
C38	1-163-139-00	s	CERAMIC, CHIP 820PF 5% 50V
C39	1-126-933-11	s	ELECT 100uF 20% 16V
C40	1-124-927-11	s	ELECT 4.7uF 20% 100V
C41	1-163-809-11	s	CERAMIC, CHIP 0.047uF 10% 25V
C42	1-124-927-11	s	ELECT 4.7uF 20% 100V
C43	1-164-232-11	s	CERAMIC, CHIP 0.01uF 10% 100V
C44	1-109-982-11	s	CERAMIC, CHIP 1uF 10% 10V
C45	1-164-232-11	s	CERAMIC, CHIP 0.01uF 10% 100V
C46	1-163-809-11	s	CERAMIC, CHIP 0.047uF 10% 25V
C47	1-163-809-11	s	CERAMIC, CHIP 0.047uF 10% 25V
C48	1-163-809-11	s	CERAMIC, CHIP 0.047uF 10% 25V
C49	1-163-275-11	s	CERAMIC, CHIP 0.001uF 5% 50V
C50	1-124-916-11	s	ELECT 22uF 20% 63V
C51	1-109-982-11	s	CERAMIC, CHIP 1uF 10% 10V
C52	1-107-823-11	s	CERAMIC, CHIP 0.47uF 10% 16V
C53	1-164-004-11	s	CERAMIC, CHIP 0.1uF 10% 25V
C54	1-164-232-11	s	CERAMIC, CHIP 0.01uF 10% 100V
C55	1-109-982-11	s	CERAMIC, CHIP 1uF 10% 10V
C56	1-163-097-00	s	CERAMIC, CHIP 15PF 5% 50V
C100	1-124-779-00	s	ELECT 10uF 20% 16V
C101	1-163-809-11	s	CERAMIC, CHIP 0.047uF 10% 25V
C102	1-126-933-11	s	ELECT 100uF 20% 16V
C103	1-124-126-00	s	ELECT 47uF 20% 25V

(VO-47A BOARD(SVO-5800P))

Ref. No. or Q'ty	Part No.	SP	Description
C104	1-124-126-00	s	ELECT 47uF 20% 25V
C105	1-163-809-11	s	CERAMIC, CHIP 0.047uF 10% 25V
C106	1-163-121-00	s	CERAMIC, CHIP 150PF 5% 50V
C107	1-163-097-00	s	CERAMIC, CHIP 15PF 5% 50V
C108	1-163-241-11	s	CERAMIC, CHIP 39PF 5% 50V
C109	1-163-235-11	s	CERAMIC, CHIP 22PF 5% 50V
C110	1-163-243-11	s	CERAMIC, CHIP 47PF 5% 50V
C111	1-164-232-11	s	CERAMIC, CHIP 0.01uF 10% 100V
C150	1-162-201-31	s	CERAMIC 12PF 5% 50V
C151	1-126-933-11	s	ELECT 100uF 20% 16V
C152	1-163-809-11	s	CERAMIC, CHIP 0.047uF 10% 25V
C153	1-164-232-11	s	CERAMIC, CHIP 0.01uF 10% 100V
C154	1-164-232-11	s	CERAMIC, CHIP 0.01uF 10% 100V
C155	1-164-232-11	s	CERAMIC, CHIP 0.01uF 10% 100V
C156	1-163-121-00	s	CERAMIC, CHIP 150PF 5% 50V
C157	1-164-232-11	s	CERAMIC, CHIP 0.01uF 10% 100V
C158	1-164-232-11	s	CERAMIC, CHIP 0.01uF 10% 100V
C159	1-164-232-11	s	CERAMIC, CHIP 0.01uF 10% 100V
C160	1-163-239-11	s	CERAMIC, CHIP 33PF 5% 50V
C161	1-163-257-11	s	CERAMIC, CHIP 180PF 5% 50V
C164	1-163-139-00	s	CERAMIC, CHIP 820PF 5% 50V
C165	1-163-241-11	s	CERAMIC, CHIP 39PF 5% 50V
C166	1-163-037-11	s	CERAMIC, CHIP 0.022uF 10% 25V
C167	1-126-933-11	s	ELECT 100uF 20% 16V
C168	1-164-232-11	s	CERAMIC, CHIP 0.01uF 10% 100V
C169	1-164-232-11	s	CERAMIC, CHIP 0.01uF 10% 100V
C170	1-163-275-11	s	CERAMIC, CHIP 0.001uF 5% 50V
C171	1-163-113-00	s	CERAMIC, CHIP 68PF 5% 50V
C186	1-164-232-11	s	CERAMIC, CHIP 0.01uF 10% 100V
C201	1-124-126-00	s	ELECT 47uF 20% 25V
C202	1-163-239-11	s	CERAMIC, CHIP 33PF 5% 50V
C203	1-163-257-11	s	CERAMIC, CHIP 180PF 5% 50V
C204	1-124-927-11	s	ELECT 4.7uF 20% 100V
C205	1-124-927-11	s	ELECT 4.7uF 20% 100V
C206	1-163-127-00	s	CERAMIC, CHIP 270PF 5% 50V
C207	1-124-126-00	s	ELECT 47uF 20% 25V
C208	1-163-809-11	s	CERAMIC, CHIP 0.047uF 10% 25V
C209	1-126-933-11	s	ELECT 100uF 20% 16V
C210	1-163-112-00	s	CERAMIC, CHIP 62PF 5% 50V
C211	1-164-491-11	s	CERAMIC, CHIP 300PF 5% 50V
C212	1-163-809-11	s	CERAMIC, CHIP 0.047uF 10% 25V
C213	1-126-933-11	s	ELECT 100uF 20% 16V
C214	1-124-126-00	s	ELECT 47uF 20% 25V
C215	1-163-097-00	s	CERAMIC, CHIP 15PF 5% 50V
C221	1-124-126-00	s	ELECT 47uF 20% 25V
C222	1-124-126-00	s	ELECT 47uF 20% 25V
C223	1-164-232-11	s	CERAMIC, CHIP 0.01uF 10% 100V
C224	1-163-251-11	s	CERAMIC, CHIP 100PF 5% 50V
C225	1-163-224-11	s	CERAMIC, CHIP 7PF 50V
C301	1-163-809-11	s	CERAMIC, CHIP 0.047uF 10% 25V
C302	1-126-933-11	s	ELECT 100uF 20% 16V
C303	1-164-346-11	s	CERAMIC 1uF 16V
C304	1-164-232-11	s	CERAMIC, CHIP 0.01uF 10% 100V
C305	1-109-982-11	s	CERAMIC, CHIP 1uF 10% 10V
C306	1-164-232-11	s	CERAMIC, CHIP 0.01uF 10% 100V
C308	1-164-004-11	s	CERAMIC, CHIP 0.1uF 10% 25V
C309	1-164-232-11	s	CERAMIC, CHIP 0.01uF 10% 100V
C310	1-124-126-00	s	ELECT 47uF 20% 25V
C311	1-124-126-00	s	ELECT 47uF 20% 25V

(VO-47A BOARD(SVO-5800P))

Ref. No. or Q'ty	Part No.	SP	Description
C312	1-163-239-11	s	CERAMIC, CHIP 33PF 5% 50V
C313	1-164-232-11	s	CERAMIC, CHIP 0.01uF 10% 100V
C351	1-163-809-11	s	CERAMIC, CHIP 0.047uF 10% 25V
C352	1-126-934-11	s	ELECT 220uF 20% 16V
C354	1-126-964-11	s	ELECT 10uF 20% 50V
C355	1-124-126-00	s	ELECT 47uF 20% 25V
C356	1-163-239-11	s	CERAMIC, CHIP 33PF 5% 50V
C357	1-163-253-11	s	CERAMIC, CHIP 120PF 5% 50V
C358	1-124-927-11	s	ELECT 4.7uF 20% 100V
C359	1-126-163-11	s	ELECT 4.7uF 20% 50V
C360	1-163-809-11	s	CERAMIC, CHIP 0.047uF 10% 25V
C362	1-163-239-11	s	CERAMIC, CHIP 33PF 5% 50V
C363	1-163-253-11	s	CERAMIC, CHIP 120PF 5% 50V
C364	1-163-222-11	s	CERAMIC, CHIP 5PF 50V
C365	1-124-126-00	s	ELECT 47uF 20% 25V
C366	1-124-126-00	s	ELECT 47uF 20% 25V
C367	1-124-126-00	s	ELECT 47uF 20% 25V
C368	1-163-239-11	s	CERAMIC, CHIP 33PF 5% 50V
C369	1-124-126-00	s	ELECT 47uF 20% 25V
C370	1-126-933-11	s	ELECT 100uF 20% 16V
C371	1-164-346-11	s	CERAMIC 1uF 16V
C372	1-163-239-11	s	CERAMIC, CHIP 33PF 5% 50V
C373	1-163-809-11	s	CERAMIC, CHIP 0.047uF 10% 25V
C374	1-126-934-11	s	ELECT 220uF 20% 16V
C375	1-124-927-11	s	ELECT 4.7uF 20% 100V
C400	1-163-121-00	s	CERAMIC, CHIP 150PF 5% 50V
C401	1-164-004-11	s	CERAMIC, CHIP 0.1uF 10% 25V
C402	1-163-229-11	s	CERAMIC, CHIP 12PF 5% 50V
C403	1-163-087-00	s	CERAMIC, CHIP 4PF 50V
C404	1-163-245-11	s	CERAMIC, CHIP 56PF 5% 50V
C405	1-163-121-00	s	CERAMIC, CHIP 150PF 5% 50V
C406	1-164-232-11	s	CERAMIC, CHIP 0.01uF 10% 100V
C407	1-163-251-11	s	CERAMIC, CHIP 100PF 5% 50V
C408	1-164-232-11	s	CERAMIC, CHIP 0.01uF 10% 100V
C409	1-164-232-11	s	CERAMIC, CHIP 0.01uF 10% 100V
C410	1-164-004-11	s	CERAMIC, CHIP 0.1uF 10% 25V
C411	1-126-933-11	s	ELECT 100uF 20% 16V
C412	1-164-232-11	s	CERAMIC, CHIP 0.01uF 10% 100V
C413	1-164-232-11	s	CERAMIC, CHIP 0.01uF 10% 100V
C414	1-164-232-11	s	CERAMIC, CHIP 0.01uF 10% 100V
C415	1-164-346-11	s	CERAMIC 1uF 16V
C416	1-164-232-11	s	CERAMIC, CHIP 0.01uF 10% 100V
C417	1-163-249-11	s	CERAMIC, CHIP 82pF 5% 50V
C420	1-164-004-11	s	CERAMIC, CHIP 0.1uF 10% 25V
C421	1-163-239-11	s	CERAMIC, CHIP 33PF 5% 50V
C422	1-163-809-11	s	CERAMIC, CHIP 0.047uF 10% 25V
C424	1-164-004-11	s	CERAMIC, CHIP 0.1uF 10% 25V
C425	1-164-232-11	s	CERAMIC, CHIP 0.01uF 10% 100V
C426	1-163-133-00	s	CERAMIC, CHIP 470PF 5% 50V
C427	1-164-344-11	s	CERAMIC, CHIP 0.068uF 10% 25V
C428	1-131-377-00	s	TANTALUM 10uF 10% 10V
C429	1-163-037-11	s	CERAMIC, CHIP 0.022uF 10% 25V
C430	1-164-232-11	s	CERAMIC, CHIP 0.01uF 10% 100V
C431	1-164-232-11	s	CERAMIC, CHIP 0.01uF 10% 100V
C432	1-164-232-11	s	CERAMIC, CHIP 0.01uF 10% 100V
C434	1-164-232-11	s	CERAMIC, CHIP 0.01uF 10% 100V
C435	1-163-037-11	s	CERAMIC, CHIP 0.022uF 10% 25V
C436	1-126-933-11	s	ELECT 100uF 20% 16V
C438	1-163-022-00	s	CERAMIC, CHIP 0.012uF 10% 50V

(VO-47A BOARD(SVO-5800P))

Ref. No. or Q'ty	Part No.	SP	Description
C439	1-163-257-11	s	CERAMIC, CHIP 180PF 5% 50V
C443	1-164-004-11	s	CERAMIC, CHIP 0.1uF 10% 25V
C446	1-164-232-11	s	CERAMIC, CHIP 0.01uF 10% 100V
C448	1-164-232-11	s	CERAMIC, CHIP 0.01uF 10% 100V
C449	1-131-347-00	s	TANTALUM 1uF 10% 35V
C451	1-163-227-11	s	CERAMIC, CHIP 10PF 5% 50V
C452	1-163-222-11	s	CERAMIC, CHIP 5PF 50V
C453	1-163-275-11	s	CERAMIC, CHIP 0.001uF 5% 50V
C454	1-126-934-11	s	ELECT 220uF 20% 16V
C455	1-164-004-11	s	CERAMIC, CHIP 0.1uF 10% 25V
C456	1-164-004-11	s	CERAMIC, CHIP 0.1uF 10% 25V
C457	1-163-251-11	s	CERAMIC, CHIP 100PF 5% 50V
C458	1-164-232-11	s	CERAMIC, CHIP 0.01uF 10% 100V
C459	1-163-251-11	s	CERAMIC, CHIP 100PF 5% 50V
C460	1-163-251-11	s	CERAMIC, CHIP 100PF 5% 50V
C461	1-164-489-11	s	CERAMIC, CHIP 0.22uF 10% 16V
C462	1-164-232-11	s	CERAMIC, CHIP 0.01uF 10% 100V
C463	1-163-809-11	s	CERAMIC, CHIP 0.047uF 10% 25V
C500	1-163-037-11	s	CERAMIC, CHIP 0.022uF 10% 25V
C501	1-164-232-11	s	CERAMIC, CHIP 0.01uF 10% 100V
C502	1-163-809-11	s	CERAMIC, CHIP 0.047uF 10% 25V
C503	1-163-809-11	s	CERAMIC, CHIP 0.047uF 10% 25V
C504	1-163-263-11	s	CERAMIC, CHIP 330PF 5% 50V
C505	1-163-239-11	s	CERAMIC, CHIP 33PF 5% 50V
C506	1-164-004-11	s	CERAMIC, CHIP 0.1uF 10% 25V
C507	1-163-251-11	s	CERAMIC, CHIP 100PF 5% 50V
C508	1-163-125-00	s	CERAMIC, CHIP 220PF 5% 50V
C510	1-163-097-00	s	CERAMIC, CHIP 15PF 5% 50V
C511	1-163-089-00	s	CERAMIC, CHIP 6PF 50V
C514	1-163-241-11	s	CERAMIC, CHIP 39PF 5% 50V
C515	1-164-232-11	s	CERAMIC, CHIP 0.01uF 10% 100V
C516	1-164-004-11	s	CERAMIC, CHIP 0.1uF 10% 25V
C517	1-164-182-11	s	CERAMIC, CHIP 3300PF 10% 100V
C518	1-164-161-11	s	CERAMIC, CHIP 0.0022uF 10% 100V
C519	1-164-232-11	s	CERAMIC, CHIP 0.01uF 10% 100V
C520	1-163-809-11	s	CERAMIC, CHIP 0.047uF 10% 25V
C521	1-163-809-11	s	CERAMIC, CHIP 0.047uF 10% 25V
C522	1-126-933-11	s	ELECT 100uF 20% 16V
C523	1-163-809-11	s	CERAMIC, CHIP 0.047uF 10% 25V
C524	1-163-239-11	s	CERAMIC, CHIP 33PF 5% 50V
C525	1-164-232-11	s	CERAMIC, CHIP 0.01uF 10% 100V
C528	1-164-004-11	s	CERAMIC, CHIP 0.1uF 10% 25V
C529	1-126-933-11	s	ELECT 100uF 20% 16V
C530	1-164-232-11	s	CERAMIC, CHIP 0.01uF 10% 100V
C531	1-163-809-11	s	CERAMIC, CHIP 0.047uF 10% 25V
C532-539	1-164-232-11	s	CERAMIC, CHIP 0.01uF 10% 100V
C541	1-164-004-11	s	CERAMIC, CHIP 0.1uF 10% 25V
C542	1-163-133-00	s	CERAMIC, CHIP 470PF 5% 50V
C543	1-163-809-11	s	CERAMIC, CHIP 0.047uF 10% 25V
C544	1-163-809-11	s	CERAMIC, CHIP 0.047uF 10% 25V
C545	1-124-126-00	s	ELECT 47uF 20% 25V
C546	1-164-232-11	s	CERAMIC, CHIP 0.01uF 10% 100V
C547	1-163-275-11	s	CERAMIC, CHIP 0.001uF 5% 50V
C548	1-124-126-00	s	ELECT 47uF 20% 25V
C549	1-164-232-11	s	CERAMIC, CHIP 0.01uF 10% 100V
C550	1-164-232-11	s	CERAMIC, CHIP 0.01uF 10% 100V
C551	1-163-125-00	s	CERAMIC, CHIP 220PF 5% 50V
C552	1-164-232-11	s	CERAMIC, CHIP 0.01uF 10% 100V
C553	1-164-232-11	s	CERAMIC, CHIP 0.01uF 10% 100V

(VO-47A BOARD(SVO-5800P))

Ref. No. or Q'ty	Part No.	SP	Description
C554	1-163-257-11	s	CERAMIC, CHIP 180PF 5% 50V
C555	1-164-232-11	s	CERAMIC, CHIP 0.01uF 10% 100V
C556	1-164-232-11	s	CERAMIC, CHIP 0.01uF 10% 100V
C557	1-163-220-11	s	CERAMIC, CHIP 3PF 50V
C558	1-164-232-11	s	CERAMIC, CHIP 0.01uF 10% 100V
C559	1-104-663-11	s	ELECT 33uF 20% 25V
C560	1-164-232-11	s	CERAMIC, CHIP 0.01uF 10% 100V
C561	1-163-133-00	s	CERAMIC, CHIP 470PF 5% 50V
C562	1-164-004-11	s	CERAMIC, CHIP 0.1uF 10% 25V
C563	1-131-377-00	s	TANTALUM 10uF 10% 10V
C564	1-163-037-11	s	CERAMIC, CHIP 0.022uF 10% 25V
C565	1-164-232-11	s	CERAMIC, CHIP 0.01uF 10% 100V
C566	1-164-004-11	s	CERAMIC, CHIP 0.1uF 10% 25V
C567	1-164-232-11	s	CERAMIC, CHIP 0.01uF 10% 100V
C568	1-163-227-11	s	CERAMIC, CHIP 10PF 5% 50V
C570	1-126-933-11	s	ELECT 100uF 20% 16V
C571	1-163-809-11	s	CERAMIC, CHIP 0.047uF 10% 25V
C572	1-163-809-11	s	CERAMIC, CHIP 0.047uF 10% 25V
C573	1-124-126-00	s	ELECT 47uF 20% 25V
C574	1-163-809-11	s	CERAMIC, CHIP 0.047uF 10% 25V
C575	1-124-126-00	s	ELECT 47uF 20% 25V
C578	1-131-351-00	s	TANTALUM 4.7uF 10% 35V
C579	1-163-037-11	s	CERAMIC, CHIP 0.022uF 10% 25V
C580	1-164-232-11	s	CERAMIC, CHIP 0.01uF 10% 100V
C581	1-131-349-00	s	TANTALUM 2.2uF 10% 35V
C588	1-126-934-11	s	ELECT 220uF 20% 16V
C589	1-164-004-11	s	CERAMIC, CHIP 0.1uF 10% 25V
C590	1-164-004-11	s	CERAMIC, CHIP 0.1uF 10% 25V
C591	1-163-251-11	s	CERAMIC, CHIP 100PF 5% 50V
C592	1-164-489-11	s	CERAMIC, CHIP 0.22uF 10% 16V
C593	1-164-232-11	s	CERAMIC, CHIP 0.01uF 10% 100V
C594	1-164-232-11	s	CERAMIC, CHIP 0.01uF 10% 100V
C595	1-164-232-11	s	CERAMIC, CHIP 0.01uF 10% 100V
C596	1-163-251-11	s	CERAMIC, CHIP 100PF 5% 50V
C597	1-163-251-11	s	CERAMIC, CHIP 100PF 5% 50V
C598	1-163-809-11	s	CERAMIC, CHIP 0.047uF 10% 25V
C605	1-163-237-11	s	CERAMIC, CHIP 27PF 5% 50V
C606	1-163-275-11	s	CERAMIC, CHIP 0.001uF 5% 50V
C607	1-163-012-00	s	CERAMIC, CHIP 1800PF 10% 50V
C608	1-163-017-00	s	CERAMIC, CHIP 0.0047uF 5% 50V
C609	1-164-232-11	s	CERAMIC, CHIP 0.01uF 10% 100V
C700	1-164-232-11	s	CERAMIC, CHIP 0.01uF 10% 100V
C701	1-164-232-11	s	CERAMIC, CHIP 0.01uF 10% 100V
C702	1-126-111-11	s	ELECT 3.3uF 20% 100V
C703	1-164-004-11	s	CERAMIC, CHIP 0.1uF 10% 25V
C704	1-164-232-11	s	CERAMIC, CHIP 0.01uF 10% 100V
C705	1-126-111-11	s	ELECT 3.3uF 20% 100V
C706	1-164-232-11	s	CERAMIC, CHIP 0.01uF 10% 100V
C707	1-164-232-11	s	CERAMIC, CHIP 0.01uF 10% 100V
C708	1-164-232-11	s	CERAMIC, CHIP 0.01uF 10% 100V
C709	1-163-241-11	s	CERAMIC, CHIP 39PF 5% 50V
C710	1-163-087-00	s	CERAMIC, CHIP 4PF 50V
C711	1-163-110-00	s	CERAMIC, CHIP 51PF 5% 50V
C712	1-163-229-11	s	CERAMIC, CHIP 12PF 5% 50V
C713	1-163-239-11	s	CERAMIC, CHIP 33PF 5% 50V
C714	1-163-239-11	s	CERAMIC, CHIP 33PF 5% 50V
C715	1-163-224-11	s	CERAMIC, CHIP 7PF 50V
C716	1-163-239-11	s	CERAMIC, CHIP 33PF 5% 50V
C717	1-163-227-11	s	CERAMIC, CHIP 10PF 5% 50V

(VO-47A BOARD(SVO-5800P))

Ref. No. or Q'ty	Part No.	SP	Description
C718	1-163-239-11	s	CERAMIC, CHIP 33PF 5% 50V
C719	1-163-224-11	s	CERAMIC, CHIP 7PF 50V
C720	1-163-239-11	s	CERAMIC, CHIP 33PF 5% 50V
C721	1-163-224-11	s	CERAMIC, CHIP 7PF 50V
C722	1-163-235-11	s	CERAMIC, CHIP 22PF 5% 50V
C801	1-164-346-11	s	CERAMIC 1uF 16V
C802	1-164-232-11	s	CERAMIC, CHIP 0.01uF 10% 100V
C805	1-164-232-11	s	CERAMIC, CHIP 0.01uF 10% 100V
C807	1-164-232-11	s	CERAMIC, CHIP 0.01uF 10% 100V
C808	1-163-245-11	s	CERAMIC, CHIP 56PF 5% 50V
C809	1-164-232-11	s	CERAMIC, CHIP 0.01uF 10% 100V
C810	1-124-927-11	s	ELECT 4.7uF 20% 100V
C811	1-164-232-11	s	CERAMIC, CHIP 0.01uF 10% 100V
C812	1-163-809-11	s	CERAMIC, CHIP 0.047uF 10% 25V
C813	1-164-232-11	s	CERAMIC, CHIP 0.01uF 10% 100V
C814	1-124-126-00	s	ELECT 47uF 20% 25V
C815	1-163-809-11	s	CERAMIC, CHIP 0.047uF 10% 25V
C816	1-164-232-11	s	CERAMIC, CHIP 0.01uF 10% 100V
C817	1-164-232-11	s	CERAMIC, CHIP 0.01uF 10% 100V
C818	1-164-232-11	s	CERAMIC, CHIP 0.01uF 10% 100V
C819	1-164-232-11	s	CERAMIC, CHIP 0.01uF 10% 100V
C820	1-164-232-11	s	CERAMIC, CHIP 0.01uF 10% 100V
C821	1-164-232-11	s	CERAMIC, CHIP 0.01uF 10% 100V
C822	1-164-232-11	s	CERAMIC, CHIP 0.01uF 10% 100V
C823	1-164-232-11	s	CERAMIC, CHIP 0.01uF 10% 100V
C824	1-164-232-11	s	CERAMIC, CHIP 0.01uF 10% 100V
C825	1-164-232-11	s	CERAMIC, CHIP 0.01uF 10% 100V
C826	1-163-809-11	s	CERAMIC, CHIP 0.047uF 10% 25V
C827	1-164-232-11	s	CERAMIC, CHIP 0.01uF 10% 100V
C828	1-124-925-11	s	ELECT 2.2uF 20% 100V
C829	1-164-343-11	s	CERAMIC, CHIP 0.056uF 10% 25V
C830	1-163-809-11	s	CERAMIC, CHIP 0.047uF 10% 25V
C831	1-163-125-00	s	CERAMIC, CHIP 220PF 5% 50V
C832	1-163-809-11	s	CERAMIC, CHIP 0.047uF 10% 25V
C833	1-163-275-11	s	CERAMIC, CHIP 0.001uF 5% 50V
C834	1-163-275-11	s	CERAMIC, CHIP 0.001uF 5% 50V
C835	1-163-809-11	s	CERAMIC, CHIP 0.047uF 10% 25V
C838	1-163-251-11	s	CERAMIC, CHIP 100PF 5% 50V
C839	1-163-251-11	s	CERAMIC, CHIP 100PF 5% 50V
C840	1-163-275-11	s	CERAMIC, CHIP 0.001uF 5% 50V
C841	1-163-251-11	s	CERAMIC, CHIP 100PF 5% 50V
C842	1-163-275-11	s	CERAMIC, CHIP 0.001uF 5% 50V
C843	1-163-251-11	s	CERAMIC, CHIP 100PF 5% 50V
C844	1-163-133-00	s	CERAMIC, CHIP 470PF 5% 50V
C845	1-163-097-00	s	CERAMIC, CHIP 15PF 5% 50V
C850	1-163-235-11	s	CERAMIC, CHIP 22PF 5% 50V
C901	1-163-229-11	s	CERAMIC, CHIP 12PF 5% 50V
C902	1-163-227-11	s	CERAMIC, CHIP 10PF 5% 50V
C903	1-164-232-11	s	CERAMIC, CHIP 0.01uF 10% 100V
C904	1-164-232-11	s	CERAMIC, CHIP 0.01uF 10% 100V
C905	1-164-232-11	s	CERAMIC, CHIP 0.01uF 10% 100V
C906	1-164-232-11	s	CERAMIC, CHIP 0.01uF 10% 100V
C909	1-164-232-11	s	CERAMIC, CHIP 0.01uF 10% 100V
C911	1-163-243-11	s	CERAMIC, CHIP 47PF 5% 50V
C912	1-163-037-11	s	CERAMIC, CHIP 0.022uF 10% 25V
C913	1-164-232-11	s	CERAMIC, CHIP 0.01uF 10% 100V
C914	1-164-232-11	s	CERAMIC, CHIP 0.01uF 10% 100V
C915	1-164-232-11	s	CERAMIC, CHIP 0.01uF 10% 100V
C916	1-109-982-11	s	CERAMIC, CHIP 1uF 10% 10V

(VO-47A BOARD(SVO-5800P))

Ref. No. or Q'ty	Part No.	SP	Description
C917	1-124-126-00	s	ELECT 47uF 20% 25V
C918	1-163-037-11	s	CERAMIC, CHIP 0.022uF 10% 25V
C919	1-163-809-11	s	CERAMIC, CHIP 0.047uF 10% 25V
C922	1-163-243-11	s	CERAMIC, CHIP 47PF 5% 50V
C923	1-164-232-11	s	CERAMIC, CHIP 0.01uF 10% 100V
C924	1-164-232-11	s	CERAMIC, CHIP 0.01uF 10% 100V
C926	1-126-111-11	s	ELECT 3.3uF 20% 100V
C927	1-164-004-11	s	CERAMIC, CHIP 0.1uF 10% 25V
C928	1-164-232-11	s	CERAMIC, CHIP 0.01uF 10% 100V
C929	1-126-111-11	s	ELECT 3.3uF 20% 100V
C930	1-164-232-11	s	CERAMIC, CHIP 0.01uF 10% 100V
C931	1-164-232-11	s	CERAMIC, CHIP 0.01uF 10% 100V
C932	1-163-241-11	s	CERAMIC, CHIP 39PF 5% 50V
C933	1-163-087-00	s	CERAMIC, CHIP 4PF 50V
C934	1-163-110-00	s	CERAMIC, CHIP 51PF 5% 50V
C935	1-163-229-11	s	CERAMIC, CHIP 12PF 5% 50V
C936	1-163-239-11	s	CERAMIC, CHIP 33PF 5% 50V
C951	1-164-004-11	s	CERAMIC, CHIP 0.1uF 10% 25V
C952	1-164-232-11	s	CERAMIC, CHIP 0.01uF 10% 100V
C953	1-126-964-11	s	ELECT 10uF 20% 50V
C954	1-163-023-00	s	CERAMIC, CHIP 0.015uF 5% 50V
C955	1-163-135-00	s	CERAMIC, CHIP 560PF 5% 50V
C956	1-163-121-00	s	CERAMIC, CHIP 150PF 5% 50V
C957	1-164-232-11	s	CERAMIC, CHIP 0.01uF 10% 100V
C958	1-164-232-11	s	CERAMIC, CHIP 0.01uF 10% 100V
C959	1-164-232-11	s	CERAMIC, CHIP 0.01uF 10% 100V
C960	1-164-232-11	s	CERAMIC, CHIP 0.01uF 10% 100V
C961	1-164-232-11	s	CERAMIC, CHIP 0.01uF 10% 100V
C962	1-164-004-11	s	CERAMIC, CHIP 0.1uF 10% 25V
C963	1-163-237-11	s	CERAMIC, CHIP 27PF 5% 50V
C964	1-163-222-11	s	CERAMIC, CHIP 5PF 50V
C965	1-163-239-11	s	CERAMIC, CHIP 33PF 5% 50V
C966	1-163-097-00	s	CERAMIC, CHIP 15PF 5% 50V
C967	1-163-235-11	s	CERAMIC, CHIP 22PF 5% 50V
C968	1-164-232-11	s	CERAMIC, CHIP 0.01uF 10% 100V
C970-974	1-164-232-11	s	CERAMIC, CHIP 0.01uF 10% 100V
C975	1-164-344-11	s	CERAMIC, CHIP 0.068uF 10% 25V
C976	1-164-344-11	s	CERAMIC, CHIP 0.068uF 10% 25V
C977	1-164-004-11	s	CERAMIC, CHIP 0.1uF 10% 25V
C978	1-164-232-11	s	CERAMIC, CHIP 0.01uF 10% 100V
C979	1-164-004-11	s	CERAMIC, CHIP 0.1uF 10% 25V
C980	1-126-933-11	s	ELECT 100uF 20% 16V
C981	1-164-232-11	s	CERAMIC, CHIP 0.01uF 10% 100V
C982	1-164-232-11	s	CERAMIC, CHIP 0.01uF 10% 100V
C983	1-164-232-11	s	CERAMIC, CHIP 0.01uF 10% 100V
C984	1-164-232-11	s	CERAMIC, CHIP 0.01uF 10% 100V
C985	1-163-986-00	s	CERAMIC 0.027uF 10% 25V
C986	1-164-344-11	s	CERAMIC, CHIP 0.068uF 10% 25V
C987	1-163-121-00	s	CERAMIC, CHIP 150PF 5% 50V
C988	1-164-344-11	s	CERAMIC, CHIP 0.068uF 10% 25V
C989	1-163-809-11	s	CERAMIC, CHIP 0.047uF 10% 25V
C990	1-163-809-11	s	CERAMIC, CHIP 0.047uF 10% 25V
C991	1-163-809-11	s	CERAMIC, CHIP 0.047uF 10% 25V
C992	1-163-809-11	s	CERAMIC, CHIP 0.047uF 10% 25V
C993	1-163-251-11	s	CERAMIC, CHIP 100PF 5% 50V
C994	1-163-131-00	s	CERAMIC, CHIP 390PF 5% 50V
C995	1-163-137-00	s	CERAMIC, CHIP 680PF 5% 50V
CN201	1-766-793-11	o	CONNECTOR, DIN 64P, MALE

(VO-47A BOARD(SVO-5800P))

Ref. No. or Q'ty	Part No.	SP	Description
CN202	1-766-793-11	o	CONNECTOR, DIN 64P, MALE
CT500	1-141-390-11	s	CAP, TRIMMER 90PF
CV100	1-141-424-11	s	CAP, TRIMMER, CHIP 30pF
CV400	1-141-450-21	s	CAP, TRIMMER, CHIP 50pF
D10-D14	8-719-801-78	s	DIODE 1S2837-T1
D151	8-719-800-76	s	DIODE 1SS226
D201	8-719-801-78	s	DIODE 1S2837-T1
D351	8-719-018-80	s	DIODE ND411G-2-T1
D400	8-719-018-80	s	DIODE ND411G-2-T1
D500	8-719-801-78	s	DIODE 1S2837-T1
D503	8-719-800-76	s	DIODE 1SS226
D504	8-719-018-80	s	DIODE ND411G-2-T1
D505	8-719-801-78	s	DIODE 1S2837-T1
D801	8-719-104-34	s	DIODE 1S2835
D803-811	8-719-801-78	s	DIODE 1S2837-T1
D901	8-719-800-76	s	DIODE 1SS226
D902	8-719-801-78	s	DIODE 1S2837-T1
D951	8-719-801-78	s	DIODE 1S2837-T1
D952	8-719-801-78	s	DIODE 1S2837-T1
D953	8-719-801-78	s	DIODE 1S2837-T1
D954	8-719-018-80	s	DIODE ND411G-2-T1
DL201	1-415-677-11	s	DELAY LINE 370ns
DL351	1-406-688-11	s	DELAY LINE 760ns
DL352	1-415-559-11	s	DELAY LINE 610ns
FL101	1-236-716-11	s	FILTER, LOW-PASS 5MHz
FL102	1-236-911-11	s	FILTER, LOW-PASS 3MHz
FL301	1-239-010-11	s	FILTER, LOW-PASS 5MHz
FL401	1-239-977-11	s	FILTER, BAND-PASS 5.06MHz
FL500	1-239-978-11	s	FILTER, BAND-PASS 4.43MHz
FL502	1-239-977-11	s	FILTER, BAND-PASS 5.06MHz
IC1	8-759-172-41	s	IC L78M09T-TL
IC2	8-759-182-84	s	IC PQ05SZ5U
IC11	8-759-285-14	s	IC AN3250FAP
IC12	8-759-035-90	s	IC TC7S02F
IC13	8-759-238-87	s	IC TC4S66F(TE85R)
IC101	8-759-710-86	s	IC NJM2233BM-T1
IC201	8-759-051-54	s	IC VC2076MP
IC202	8-759-710-86	s	IC NJM2233BM-T1
IC301	8-752-340-25	s	IC CXL5505M-T4
IC351	8-759-256-44	s	IC NJM2235M-TE2
IC401	8-759-634-93	s	IC M52059AFP
IC403	8-759-239-55	s	IC TC74HC123AF
IC500	8-759-710-86	s	IC NJM2233BM-T1
IC501	8-759-634-93	s	IC M52059AFP
IC502	8-759-172-41	s	IC L78M09T-TL
IC503	8-759-239-55	s	IC TC74HC123AF
IC505	8-759-182-84	s	IC PQ05SZ5U
IC700	8-752-333-24	s	IC CXL1506M-T4
IC701	1-810-661-11	s	HIC BX6544 (BP-028)
IC801	8-759-710-07	s	IC NJM2234M
IC802	8-759-008-98	s	IC MC14040BF-T2
IC803	8-759-710-86	s	IC NJM2233BM-T1
IC804	8-759-969-13	s	IC SN16913P
IC805	8-759-908-17	s	IC TL082CPS
IC806	8-759-008-82	s	IC MC14013BF

(VO-47A BOARD(SVO-5800P))

Ref. No. or Q'ty	Part No.	SP	Description
IC807	8-759-009-11	s	IC MC14070BF
IC808	8-759-239-55	s	IC TC74HC123AF
IC809	8-759-009-51	s	IC MC14538BF
IC810	8-759-008-82	s	IC MC14013BF
IC901	8-759-421-07	s	IC AN3497SB-E2
IC902	8-752-333-24	s	IC CXL1506M-T4
IC951	8-759-098-22	s	IC M52350FP
IC952	8-759-710-07	s	IC NJM2234M
L11	1-410-482-31	s	INDUCTOR 100uH
L12	1-408-422-00	s	INDUCTOR 120uH
L13	1-410-478-11	s	INDUCTOR 47uH
L14	1-410-482-31	s	INDUCTOR 100uH
L15	1-410-482-31	s	INDUCTOR 100uH
L16	1-410-482-31	s	INDUCTOR 100uH
L101	1-410-482-31	s	INDUCTOR 100uH
L102	1-408-416-00	s	INDUCTOR 39uH
L150	1-410-470-11	s	INDUCTOR 10uH
L151	1-410-482-31	s	INDUCTOR 100uH
L152	1-408-424-00	s	INDUCTOR 180uH
L154	1-410-476-11	s	INDUCTOR 33uH
L155	1-408-424-00	s	INDUCTOR 180uH
L156	1-410-478-11	s	INDUCTOR 47uH
L158	1-410-471-11	s	INDUCTOR 12uH
L201	1-410-482-31	s	INDUCTOR 100uH
L202	1-410-482-31	s	INDUCTOR 100uH
L203	1-408-420-00	s	INDUCTOR 82uH
L301	1-410-482-31	s	INDUCTOR 100uH
L302	1-408-397-00	s	INDUCTOR 1uH
L304	1-410-470-11	s	INDUCTOR 10uH
L351	1-410-482-31	s	INDUCTOR 100uH
L352	1-408-411-00	s	INDUCTOR 15uH
L353	1-410-482-31	s	INDUCTOR 100uH
L354	1-408-413-00	s	INDUCTOR 22uH
L355	1-408-411-00	s	INDUCTOR 15uH
L356	1-410-473-11	s	INDUCTOR 18uH
L400	1-408-423-00	s	INDUCTOR 150uH
L401	1-408-419-00	s	INDUCTOR 68uH
L402	1-410-482-31	s	INDUCTOR 100uH
L403	1-410-476-11	s	INDUCTOR 33uH
L404	1-410-482-31	s	INDUCTOR 100uH
L405	1-410-478-11	s	INDUCTOR 47uH
L406	1-410-482-31	s	INDUCTOR 100uH
L407	1-410-476-11	s	INDUCTOR 33uH
L408	1-410-494-11	s	INDUCTOR 1MMH
L500	1-408-425-00	s	INDUCTOR 220uH
L501	1-408-425-00	s	INDUCTOR 220uH
L502	1-410-482-31	s	INDUCTOR 100uH
L504	1-408-419-00	s	INDUCTOR 68uH
L506	1-408-424-00	s	INDUCTOR 180uH
L509	1-410-482-31	s	INDUCTOR 100uH
L510	1-410-482-31	s	INDUCTOR 100uH
L511	1-408-420-00	s	INDUCTOR 82uH
L512	1-408-419-00	s	INDUCTOR 68uH
L513	1-410-482-31	s	INDUCTOR 100uH
L515	1-410-482-31	s	INDUCTOR 100uH
L516	1-407-496-00	s	INDUCTOR 2.2mH
L517	1-410-120-11	s	INDUCTOR 1.2mH
L701	1-410-478-11	s	INDUCTOR 47uH

(VO-47A BOARD(SVO-5800P))

Ref. No. or Q'ty	Part No.	SP	Description
L702	1-408-414-00	s	INDUCTOR 27uH
L703	1-408-413-00	s	INDUCTOR 22uH
L704	1-408-413-00	s	INDUCTOR 22uH
L705	1-408-414-00	s	INDUCTOR 27uH
L706	1-410-482-31	s	INDUCTOR 100uH
L707	1-408-414-00	s	INDUCTOR 27uH
L708	1-408-414-00	s	INDUCTOR 27uH
L709	1-408-413-00	s	INDUCTOR 22uH
L710	1-408-414-00	s	INDUCTOR 27uH
L711	1-408-413-00	s	INDUCTOR 22uH
L712	1-408-413-00	s	INDUCTOR 22uH
L713	1-408-414-00	s	INDUCTOR 27uH
L802	1-410-482-31	s	INDUCTOR 100uH
L901	1-410-470-11	s	INDUCTOR 10uH
L902	1-410-470-11	s	INDUCTOR 10uH
L905	1-410-478-11	s	INDUCTOR 47uH
L906	1-408-414-00	s	INDUCTOR 27uH
L907	1-408-413-00	s	INDUCTOR 22uH
L951	1-410-473-11	s	INDUCTOR 18uH
L952	1-410-471-11	s	INDUCTOR 12uH
L953	1-410-482-31	s	INDUCTOR 100uH
L954	1-410-482-31	s	INDUCTOR 100uH
L955	1-408-424-00	s	INDUCTOR 180uH
Q10	8-729-907-39	s	TRANSISTOR IMD2T109
Q11	8-729-904-07	s	TRANSISTOR FMG2
Q12	8-729-216-22	s	TRANSISTOR 2SA1162
Q13	8-729-202-38	s	TRANSISTOR 2SC3326N
Q14	8-729-202-38	s	TRANSISTOR 2SC3326N
Q15	8-729-904-07	s	TRANSISTOR FMG2
Q16	8-729-904-07	s	TRANSISTOR FMG2
Q17	8-729-901-01	s	TRANSISTOR DTC144EK
Q18	8-729-904-07	s	TRANSISTOR FMG2
Q19	8-729-904-07	s	TRANSISTOR FMG2
Q20	8-729-904-07	s	TRANSISTOR FMG2
Q21	8-729-202-38	s	TRANSISTOR 2SC3326N
Q22	8-729-230-49	s	TRANSISTOR 2SC2712-YG
Q23	8-729-901-06	s	TRANSISTOR DTA144EK
Q24	8-729-904-07	s	TRANSISTOR FMG2
Q25	8-729-216-22	s	TRANSISTOR 2SA1162
Q26	8-729-901-01	s	TRANSISTOR DTC144EK
Q27	8-729-230-49	s	TRANSISTOR 2SC2712-YG
Q28	8-729-903-97	s	TRANSISTOR FMS1FE
Q29	8-729-216-22	s	TRANSISTOR 2SA1162
Q30	8-729-901-06	s	TRANSISTOR DTA144EK
Q31	8-729-904-07	s	TRANSISTOR FMG2
Q34	8-729-907-26	s	TRANSISTOR IMX1
Q35	8-729-216-22	s	TRANSISTOR 2SA1162
Q36	8-729-901-06	s	TRANSISTOR DTA144EK
Q37	8-729-904-07	s	TRANSISTOR FMG2
Q38	8-729-900-89	s	TRANSISTOR DTC144ES
Q101	8-729-216-22	s	TRANSISTOR 2SA1162
Q102	8-729-230-49	s	TRANSISTOR 2SC2712-YG
Q104	8-729-216-22	s	TRANSISTOR 2SA1162
Q108	8-729-230-49	s	TRANSISTOR 2SC2712-YG
Q151	8-729-230-49	s	TRANSISTOR 2SC2712-YG
Q152	8-729-216-22	s	TRANSISTOR 2SA1162
Q153	8-729-907-26	s	TRANSISTOR IMX1
Q155	8-729-901-06	s	TRANSISTOR DTA144EK

(VO-47A BOARD(SVO-5800P))

Ref. No. or Q'ty	Part No.	SP	Description
Q156	8-729-901-01	s	TRANSISTOR DTC144EK
Q157	8-729-216-22	s	TRANSISTOR 2SA1162
Q158	8-729-230-49	s	TRANSISTOR 2SC2712-YG
Q159	8-729-907-26	s	TRANSISTOR IMX1
Q160	8-729-907-46	s	TRANSISTOR IMZ1
Q161	8-729-903-10	s	TRANSISTOR FMW1
Q162	8-729-202-38	s	TRANSISTOR 2SC3326N
Q201	8-729-901-01	s	TRANSISTOR DTC144EK
Q202	8-729-230-49	s	TRANSISTOR 2SC2712-YG
Q301	8-729-230-49	s	TRANSISTOR 2SC2712-YG
Q302	8-729-230-49	s	TRANSISTOR 2SC2712-YG
Q303	8-729-907-26	s	TRANSISTOR IMX1
Q350	8-729-901-01	s	TRANSISTOR DTC144EK
Q351	8-729-230-49	s	TRANSISTOR 2SC2712-YG
Q352	8-729-903-97	s	TRANSISTOR FMS1FE
Q353	8-729-903-10	s	TRANSISTOR FMW1
Q354	8-729-901-01	s	TRANSISTOR DTC144EK
Q355	8-729-907-46	s	TRANSISTOR IMZ1
Q356	8-729-216-22	s	TRANSISTOR 2SA1162
Q358	8-729-907-26	s	TRANSISTOR IMX1
Q359	8-729-907-26	s	TRANSISTOR IMX1
Q360	8-729-202-38	s	TRANSISTOR 2SC3326N
Q361	8-729-230-49	s	TRANSISTOR 2SC2712-YG
Q362	8-729-907-26	s	TRANSISTOR IMX1
Q363	8-729-230-49	s	TRANSISTOR 2SC2712-YG
Q364	8-729-901-01	s	TRANSISTOR DTC144EK
Q400	8-729-901-01	s	TRANSISTOR DTC144EK
Q401	8-729-907-26	s	TRANSISTOR IMX1
Q403	8-729-202-38	s	TRANSISTOR 2SC3326N
Q405	8-729-907-26	s	TRANSISTOR IMX1
Q406	8-729-216-22	s	TRANSISTOR 2SA1162
Q408	8-729-903-10	s	TRANSISTOR FMW1
Q410	8-729-230-49	s	TRANSISTOR 2SC2712-YG
Q411	8-729-904-07	s	TRANSISTOR FMG2
Q413	8-729-904-07	s	TRANSISTOR FMG2
Q414	8-729-230-49	s	TRANSISTOR 2SC2712-YG
Q500	8-729-230-49	s	TRANSISTOR 2SC2712-YG
Q501	8-729-907-26	s	TRANSISTOR IMX1
Q502	8-729-901-01	s	TRANSISTOR DTC144EK
Q503	8-729-230-49	s	TRANSISTOR 2SC2712-YG
Q504	8-729-907-26	s	TRANSISTOR IMX1
Q505	8-729-904-07	s	TRANSISTOR FMG2
Q508	8-729-202-38	s	TRANSISTOR 2SC3326N
Q509	8-729-907-26	s	TRANSISTOR IMX1
Q510	8-729-901-01	s	TRANSISTOR DTC144EK
Q511	8-729-109-44	s	TRANSISTOR 2SK94
Q512	8-729-109-44	s	TRANSISTOR 2SK94
Q513	8-729-202-38	s	TRANSISTOR 2SC3326N
Q514	8-729-903-10	s	TRANSISTOR FMW1
Q516	8-729-230-49	s	TRANSISTOR 2SC2712-YG
Q520	8-729-901-06	s	TRANSISTOR DTA144EK
Q521	8-729-907-26	s	TRANSISTOR IMX1
Q523	8-729-907-26	s	TRANSISTOR IMX1
Q525	8-729-907-26	s	TRANSISTOR IMX1
Q526	8-729-202-38	s	TRANSISTOR 2SC3326N
Q527	8-729-230-49	s	TRANSISTOR 2SC2712-YG
Q528	8-729-903-10	s	TRANSISTOR FMW1
Q530	8-729-230-49	s	TRANSISTOR 2SC2712-YG
Q531	8-729-230-49	s	TRANSISTOR 2SC2712-YG

(VO-47A BOARD(SVO-5800P))

Ref. No. or Q'ty	Part No.	SP	Description
Q532	8-729-216-22	s	TRANSISTOR 2SA1162
Q533	8-729-230-49	s	TRANSISTOR 2SC2712-YG
Q534	8-729-901-01	s	TRANSISTOR DTC144EK
Q535	8-729-901-01	s	TRANSISTOR DTC144EK
Q536	8-729-904-07	s	TRANSISTOR FMG2
Q700	8-729-230-49	s	TRANSISTOR 2SC2712-YG
Q702	8-729-230-49	s	TRANSISTOR 2SC2712-YG
Q801	8-729-907-26	s	TRANSISTOR IMX1
Q803	8-729-907-26	s	TRANSISTOR IMX1
Q804	8-729-230-49	s	TRANSISTOR 2SC2712-YG
Q806	8-729-907-26	s	TRANSISTOR IMX1
Q807	8-729-901-01	s	TRANSISTOR DTC144EK
Q810	8-729-904-07	s	TRANSISTOR FMG2
Q901	8-729-907-26	s	TRANSISTOR IMX1
Q903	8-729-230-49	s	TRANSISTOR 2SC2712-YG
Q904	8-729-230-49	s	TRANSISTOR 2SC2712-YG
Q905	8-729-230-49	s	TRANSISTOR 2SC2712-YG
Q906	8-729-216-22	s	TRANSISTOR 2SA1162
Q951	8-729-903-10	s	TRANSISTOR FMW1
Q953	8-729-907-26	s	TRANSISTOR IMX1
Q955	8-729-904-07	s	TRANSISTOR FMG2
Q959	8-729-904-07	s	TRANSISTOR FMG2
Q961	8-729-904-07	s	TRANSISTOR FMG2
R1	1-216-075-00	s	METAL, CHIP 12K 5% 1/10W
R2	1-216-057-00	s	METAL, CHIP 2.2K 5% 1/10W
R3	1-216-067-00	s	METAL, CHIP 5.6K 5% 1/10W
R4	1-216-065-00	s	METAL, CHIP 4.7K 5% 1/10W
R7	1-216-295-91	s	RES, CHIP 0
R9	1-216-679-11	s	METAL, CHIP 15K 0.5% 1/10W
R10	1-216-119-00	s	METAL, CHIP 820K 5% 1/10W
R11	1-216-065-00	s	METAL, CHIP 4.7K 5% 1/10W
R12	1-216-041-00	s	METAL, CHIP 470 5% 1/10W
R13	1-216-665-11	s	METAL, CHIP 3.9K 0.5% 1/10W
R14	1-216-089-00	s	METAL, CHIP 47K 5% 1/10W
R15	1-216-089-00	s	METAL, CHIP 47K 5% 1/10W
R16	1-216-634-11	s	METAL, CHIP 200 0.5% 1/10W
R17	1-216-637-11	s	METAL, CHIP 270 0.5% 1/10W
R18	1-216-089-00	s	METAL, CHIP 47K 5% 1/10W
R19	1-216-089-00	s	METAL, CHIP 47K 5% 1/10W
R20	1-216-674-11	s	METAL, CHIP 9.1K 0.5% 1/10W
R21	1-216-053-00	s	METAL, CHIP 1.5K 5% 1/10W
R22	1-216-665-11	s	METAL, CHIP 3.9K 0.5% 1/10W
R23	1-216-651-11	s	METAL, CHIP 1K 0.5% 1/10W
R24	1-216-049-00	s	METAL, CHIP 1K 5% 1/10W
R25	1-216-663-11	s	METAL, CHIP 3.3K 0.5% 1/10W
R26	1-216-081-00	s	METAL, CHIP 22K 5% 1/10W
R27	1-216-051-00	s	METAL, CHIP 1.2K 5% 1/10W
R28	1-216-119-00	s	METAL, CHIP 820K 5% 1/10W
R29	1-216-067-00	s	METAL, CHIP 5.6K 5% 1/10W
R30	1-216-651-11	s	METAL, CHIP 1K 0.5% 1/10W
R31	1-216-641-11	s	METAL, CHIP 390 0.5% 1/10W
R32	1-216-635-11	s	METAL, CHIP 220 0.5% 1/10W
R33	1-216-641-11	s	METAL, CHIP 390 0.5% 1/10W
R34	1-216-105-91	s	METAL, CHIP 220K 5% 1/10W
R35	1-216-683-11	s	METAL, CHIP 22K 0.5% 1/10W
R36	1-216-089-00	s	METAL, CHIP 47K 5% 1/10W
R37	1-216-697-91	s	METAL, CHIP 82K 0.5% 1/10W
R38	1-216-067-00	s	METAL, CHIP 5.6K 5% 1/10W

(VO-47A BOARD(SVO-5800P))

Ref. No. or Q'ty	Part No.	SP	Description
R39	1-216-071-00	s	METAL, CHIP 8.2K 5% 1/10W
R40	1-208-785-11	s	METAL, CHIP 1.3K 0.5% 1/10W
R41	1-216-638-11	s	METAL, CHIP 300 0.5% 1/10W
R42	1-215-429-00	s	METAL 2.2K 1% 1/6W
R44	1-216-125-00	s	METAL, CHIP 1.5M 5% 1/10W
R45	1-216-073-00	s	METAL, CHIP 10K 5% 1/10W
R46	1-216-073-00	s	METAL, CHIP 10K 5% 1/10W
R47	1-216-295-91	s	RES, CHIP 0
R48	1-216-047-00	s	METAL, CHIP 820 5% 1/10W
R49	1-216-083-00	s	METAL, CHIP 27K 5% 1/10W
R50	1-216-648-11	s	METAL, CHIP 750 0.5% 1/10W
R51	1-216-053-00	s	METAL, CHIP 1.5K 5% 1/10W
R52	1-216-065-00	s	METAL, CHIP 4.7K 5% 1/10W
R53	1-216-089-00	s	METAL, CHIP 47K 5% 1/10W
R56	1-216-089-00	s	METAL, CHIP 47K 5% 1/10W
R57	1-216-121-00	s	METAL, CHIP 1M 5% 1/10W
R58	1-216-117-00	s	METAL, CHIP 680K 5% 1/10W
R59	1-216-041-00	s	METAL, CHIP 470 5% 1/10W
R60	1-216-073-00	s	METAL, CHIP 10K 5% 1/10W
R61	1-216-663-11	s	METAL, CHIP 3.3K 0.5% 1/10W
R62	1-216-661-11	s	METAL, CHIP 2.7K 0.5% 1/10W
R63	1-216-647-11	s	METAL, CHIP 680 0.5% 1/10W
R64	1-216-677-11	s	METAL, CHIP 12K 0.5% 1/10W
R65	1-216-650-11	s	METAL, CHIP 910 0.5% 1/10W
R66	1-216-073-00	s	METAL, CHIP 10K 5% 1/10W
R67	1-216-073-00	s	METAL, CHIP 10K 5% 1/10W
R68	1-216-057-00	s	METAL, CHIP 2.2K 5% 1/10W
R69	1-216-051-00	s	METAL, CHIP 1.2K 5% 1/10W
R70	1-216-089-00	s	METAL, CHIP 47K 5% 1/10W
R71	1-216-089-00	s	METAL, CHIP 47K 5% 1/10W
R72	1-208-774-11	s	METAL, CHIP 470 0.50% 1/10W
R73	1-208-774-11	s	METAL, CHIP 470 0.50% 1/10W
R74	1-216-663-11	s	METAL, CHIP 3.3K 0.5% 1/10W
R75	1-208-789-11	s	METAL, CHIP 2K 0.5% 1/10W
R76	1-216-049-00	s	METAL, CHIP 1K 5% 1/10W
R77	1-216-663-11	s	METAL, CHIP 3.3K 0.5% 1/10W
R78	1-216-657-11	s	METAL, CHIP 1.8K 0.5% 1/10W
R101	1-216-037-00	s	METAL, CHIP 330 5% 1/10W
R102	1-216-651-11	s	METAL, CHIP 1K 0.5% 1/10W
R103	1-216-073-00	s	METAL, CHIP 10K 5% 1/10W
R104	1-216-665-11	s	METAL, CHIP 3.9K 0.5% 1/10W
R105	1-216-049-00	s	METAL, CHIP 1K 5% 1/10W
R106	1-216-077-00	s	METAL, CHIP 15K 5% 1/10W
R107	1-216-651-11	s	METAL, CHIP 1K 0.5% 1/10W
R108	1-208-774-11	s	METAL, CHIP 470 0.50% 1/10W
R109	1-208-774-11	s	METAL, CHIP 470 0.50% 1/10W
R110	1-216-651-11	s	METAL, CHIP 1K 0.5% 1/10W
R111	1-216-651-11	s	METAL, CHIP 1K 0.5% 1/10W
R112	1-216-053-00	s	METAL, CHIP 1.5K 5% 1/10W
R113	1-216-053-00	s	METAL, CHIP 1.5K 5% 1/10W
R114	1-216-295-91	s	RES, CHIP 0
R129	1-216-035-00	s	METAL, CHIP 270 5% 1/10W
R150	1-215-409-00	s	METAL 330 1% 1/6W
R151	1-216-659-11	s	METAL, CHIP 2.2K 0.5% 1/10W
R152	1-216-049-00	s	METAL, CHIP 1K 5% 1/10W
R153	1-216-685-11	s	METAL, CHIP 27K 0.5% 1/10W
R154	1-216-663-11	s	METAL, CHIP 3.3K 0.5% 1/10W
R155	1-216-053-00	s	METAL, CHIP 1.5K 5% 1/10W
R156	1-216-651-11	s	METAL, CHIP 1K 0.5% 1/10W

(VO-47A BOARD(SVO-5800P))

Ref. No. or Q'ty	Part No.	SP	Description
R157	1-216-639-11	s	METAL, CHIP 330 0.5% 1/10W
R158	1-216-631-11	s	METAL, CHIP 150 0.5% 1/10W
R159	1-216-659-11	s	METAL, CHIP 2.2K 0.5% 1/10W
R160	1-216-295-91	s	RES, CHIP 0
R161	1-216-081-00	s	METAL, CHIP 22K 5% 1/10W
R162	1-216-077-00	s	METAL, CHIP 15K 5% 1/10W
R163	1-216-045-00	s	METAL, CHIP 680 5% 1/10W
R164	1-216-073-00	s	METAL, CHIP 10K 5% 1/10W
R165	1-216-081-00	s	METAL, CHIP 22K 5% 1/10W
R166	1-216-037-00	s	METAL, CHIP 330 5% 1/10W
R167	1-216-659-11	s	METAL, CHIP 2.2K 0.5% 1/10W
R168	1-216-649-11	s	METAL, CHIP 820 0.5% 1/10W
R170	1-216-635-11	s	METAL, CHIP 220 0.5% 1/10W
R171	1-216-049-00	s	METAL, CHIP 1K 5% 1/10W
R172	1-216-073-00	s	METAL, CHIP 10K 5% 1/10W
R173	1-216-687-11	s	METAL, CHIP 33K 0.5% 1/10W
R174	1-216-041-00	s	METAL, CHIP 470 5% 1/10W
R175	1-216-037-00	s	METAL, CHIP 330 5% 1/10W
R176	1-216-651-11	s	METAL, CHIP 1K 0.5% 1/10W
R177	1-216-049-00	s	METAL, CHIP 1K 5% 1/10W
R178	1-216-081-00	s	METAL, CHIP 22K 5% 1/10W
R179	1-216-073-00	s	METAL, CHIP 10K 5% 1/10W
R180	1-216-041-00	s	METAL, CHIP 470 5% 1/10W
R181	1-216-013-00	s	METAL, CHIP 33 5% 1/10W
R182	1-216-639-11	s	METAL, CHIP 330 0.5% 1/10W
R183	1-216-663-11	s	METAL, CHIP 3.3K 0.5% 1/10W
R184	1-216-073-00	s	METAL, CHIP 10K 5% 1/10W
R185	1-216-657-11	s	METAL, CHIP 1.8K 0.5% 1/10W
R186	1-216-085-00	s	METAL, CHIP 33K 5% 1/10W
R187	1-216-073-00	s	METAL, CHIP 10K 5% 1/10W
R188	1-216-089-00	s	METAL, CHIP 47K 5% 1/10W
R189	1-216-657-11	s	METAL, CHIP 1.8K 0.5% 1/10W
R190	1-216-045-00	s	METAL, CHIP 680 5% 1/10W
R191	1-216-089-00	s	METAL, CHIP 47K 5% 1/10W
R193	1-216-073-00	s	METAL, CHIP 10K 5% 1/10W
R194	1-216-661-11	s	METAL, CHIP 2.7K 0.5% 1/10W
R195	1-216-295-91	s	RES, CHIP 0
R201	1-216-033-00	s	METAL, CHIP 220 5% 1/10W
R202	1-216-655-11	s	METAL, CHIP 1.5K 0.5% 1/10W
R203	1-216-664-11	s	METAL, CHIP 3.6K 0.5% 1/10W
R204	1-216-639-11	s	METAL, CHIP 330 0.5% 1/10W
R205	1-216-049-00	s	METAL, CHIP 1K 5% 1/10W
R206	1-216-113-00	s	METAL, CHIP 470K 5% 1/10W
R207	1-216-073-00	s	METAL, CHIP 10K 5% 1/10W
R208	1-216-295-91	s	RES, CHIP 0
R209	1-216-295-91	s	RES, CHIP 0
R210	1-216-655-11	s	METAL, CHIP 1.5K 0.5% 1/10W
R211	1-216-663-11	s	METAL, CHIP 3.3K 0.5% 1/10W
R212	1-216-083-00	s	METAL, CHIP 27K 5% 1/10W
R213	1-216-075-00	s	METAL, CHIP 12K 5% 1/10W
R214	1-216-039-00	s	METAL, CHIP 390 5% 1/10W
R216	1-216-651-11	s	METAL, CHIP 1K 0.5% 1/10W
R217	1-216-057-00	s	METAL, CHIP 2.2K 5% 1/10W
R218	1-216-639-11	s	METAL, CHIP 330 0.5% 1/10W
R219	1-216-648-11	s	METAL, CHIP 750 0.5% 1/10W
R221	1-216-043-91	s	METAL, CHIP 560 5% 1/10W
R233	1-216-073-00	s	METAL, CHIP 10K 5% 1/10W
R234	1-216-041-00	s	METAL, CHIP 470 5% 1/10W
R301	1-216-121-00	s	METAL, CHIP 1M 5% 1/10W

(VO-47A BOARD(SVO-5800P))

Ref. No. or Q'ty	Part No.	SP	Description
R302	1-216-049-00	s	METAL, CHIP 1K 5% 1/10W
R303	1-216-095-00	s	METAL, CHIP 82K 5% 1/10W
R304	1-216-059-00	s	METAL, CHIP 2.7K 5% 1/10W
R305	1-216-660-11	s	METAL, CHIP 2.4K 0.5% 1/10W
R306	1-216-041-00	s	METAL, CHIP 470 5% 1/10W
R307	1-216-049-00	s	METAL, CHIP 1K 5% 1/10W
R308	1-216-097-00	s	METAL, CHIP 100K 5% 1/10W
R309	1-216-049-00	s	METAL, CHIP 1K 5% 1/10W
R311	1-216-049-00	s	METAL, CHIP 1K 5% 1/10W
R344	1-208-751-11	s	METAL, CHIP 51 0.5% 1/10W
R347	1-216-121-00	s	METAL, CHIP 1M 5% 1/10W
R348	1-216-073-00	s	METAL, CHIP 10K 5% 1/10W
R349	1-216-121-00	s	METAL, CHIP 1M 5% 1/10W
R350	1-216-089-00	s	METAL, CHIP 47K 5% 1/10W
R351	1-216-641-11	s	METAL, CHIP 390 0.5% 1/10W
R353	1-216-641-11	s	METAL, CHIP 390 0.5% 1/10W
R354	1-216-675-11	s	METAL, CHIP 10K 0.5% 1/10W
R355	1-216-641-11	s	METAL, CHIP 390 0.5% 1/10W
R356	1-216-081-00	s	METAL, CHIP 22K 5% 1/10W
R357	1-216-077-00	s	METAL, CHIP 15K 5% 1/10W
R358	1-216-651-11	s	METAL, CHIP 1K 0.5% 1/10W
R359	1-216-650-11	s	METAL, CHIP 910 0.5% 1/10W
R360	1-216-646-11	s	METAL, CHIP 620 0.5% 1/10W
R361	1-216-651-11	s	METAL, CHIP 1K 0.5% 1/10W
R362	1-216-650-11	s	METAL, CHIP 910 0.5% 1/10W
R363	1-216-646-11	s	METAL, CHIP 620 0.5% 1/10W
R364	1-216-049-00	s	METAL, CHIP 1K 5% 1/10W
R365	1-218-770-11	s	METAL, CHIP 560K 0.50% 1/10W
R366	1-216-655-11	s	METAL, CHIP 1.5K 0.5% 1/10W
R367	1-216-073-00	s	METAL, CHIP 10K 5% 1/10W
R368	1-216-073-00	s	METAL, CHIP 10K 5% 1/10W
R369	1-216-647-11	s	METAL, CHIP 680 0.5% 1/10W
R370	1-216-049-00	s	METAL, CHIP 1K 5% 1/10W
R371	1-216-057-00	s	METAL, CHIP 2.2K 5% 1/10W
R372	1-216-037-00	s	METAL, CHIP 330 5% 1/10W
R373	1-216-697-91	s	METAL, CHIP 82K 0.5% 1/10W
R374	1-216-659-11	s	METAL, CHIP 2.2K 0.5% 1/10W
R375	1-216-073-00	s	METAL, CHIP 10K 5% 1/10W
R376	1-216-678-11	s	METAL, CHIP 13K 0.5% 1/10W
R378	1-216-049-00	s	METAL, CHIP 1K 5% 1/10W
R379	1-216-633-11	s	METAL, CHIP 180 0.5% 1/10W
R380	1-216-649-11	s	METAL, CHIP 820 0.5% 1/10W
R381	1-216-049-00	s	METAL, CHIP 1K 5% 1/10W
R382	1-216-057-00	s	METAL, CHIP 2.2K 5% 1/10W
R383	1-216-089-00	s	METAL, CHIP 47K 5% 1/10W
R384	1-208-774-11	s	METAL, CHIP 470 0.50% 1/10W
R385	1-216-647-11	s	METAL, CHIP 680 0.5% 1/10W
R386	1-208-774-11	s	METAL, CHIP 470 0.50% 1/10W
R387	1-216-051-00	s	METAL, CHIP 1.2K 5% 1/10W
R388	1-216-033-00	s	METAL, CHIP 220 5% 1/10W
R389	1-216-041-00	s	METAL, CHIP 470 5% 1/10W
R390	1-216-049-00	s	METAL, CHIP 1K 5% 1/10W
R391	1-216-081-00	s	METAL, CHIP 22K 5% 1/10W
R392	1-216-073-00	s	METAL, CHIP 10K 5% 1/10W
R393	1-216-077-00	s	METAL, CHIP 15K 5% 1/10W
R394	1-216-057-00	s	METAL, CHIP 2.2K 5% 1/10W
R395	1-216-073-00	s	METAL, CHIP 10K 5% 1/10W
R396	1-218-754-11	s	METAL, CHIP 120K 0.50% 1/10W
R397	1-216-683-11	s	METAL, CHIP 22K 0.5% 1/10W

(VO-47A BOARD(SVO-5800P))

Ref. No. or Q'ty	Part No.	SP	Description
R398	1-216-097-00	s	METAL, CHIP 100K 5% 1/10W
R399	1-216-121-00	s	METAL, CHIP 1M 5% 1/10W
R400	1-216-045-00	s	METAL, CHIP 680 5% 1/10W
R401	1-216-639-11	s	METAL, CHIP 330 0.5% 1/10W
R402	1-216-655-11	s	METAL, CHIP 1.5K 0.5% 1/10W
R403	1-216-662-11	s	METAL, CHIP 3K 0.5% 1/10W
R404	1-216-067-00	s	METAL, CHIP 5.6K 5% 1/10W
R405	1-216-073-00	s	METAL, CHIP 10K 5% 1/10W
R406	1-216-073-00	s	METAL, CHIP 10K 5% 1/10W
R408	1-216-045-00	s	METAL, CHIP 680 5% 1/10W
R409	1-216-081-00	s	METAL, CHIP 22K 5% 1/10W
R410	1-216-079-00	s	METAL, CHIP 18K 5% 1/10W
R411	1-216-651-11	s	METAL, CHIP 1K 0.5% 1/10W
R412	1-216-649-11	s	METAL, CHIP 820 0.5% 1/10W
R413	1-216-649-11	s	METAL, CHIP 820 0.5% 1/10W
R414	1-216-079-00	s	METAL, CHIP 18K 5% 1/10W
R415	1-215-421-00	s	METAL 1K 1% 1/6W
R416	1-216-049-00	s	METAL, CHIP 1K 5% 1/10W
R419	1-216-081-00	s	METAL, CHIP 22K 5% 1/10W
R421	1-216-045-00	s	METAL, CHIP 680 5% 1/10W
R422	1-216-073-00	s	METAL, CHIP 10K 5% 1/10W
R423	1-216-073-00	s	METAL, CHIP 10K 5% 1/10W
R424	1-216-013-00	s	METAL, CHIP 33 5% 1/10W
R426	1-216-655-11	s	METAL, CHIP 1.5K 0.5% 1/10W
R427	1-216-647-11	s	METAL, CHIP 680 0.5% 1/10W
R428	1-216-073-00	s	METAL, CHIP 10K 5% 1/10W
R429	1-216-073-00	s	METAL, CHIP 10K 5% 1/10W
R430	1-216-691-11	s	METAL, CHIP 47K 0.5% 1/10W
R431	1-216-665-11	s	METAL, CHIP 3.9K 0.5% 1/10W
R432	1-216-683-11	s	METAL, CHIP 22K 0.5% 1/10W
R433	1-208-774-11	s	METAL, CHIP 470 0.50% 1/10W
R434	1-216-659-11	s	METAL, CHIP 2.2K 0.5% 1/10W
R435	1-216-657-11	s	METAL, CHIP 1.8K 0.5% 1/10W
R438	1-216-295-91	s	RES, CHIP 0
R442	1-216-295-91	s	RES, CHIP 0
R445	1-216-065-00	s	METAL, CHIP 4.7K 5% 1/10W
R446	1-216-065-00	s	METAL, CHIP 4.7K 5% 1/10W
R448	1-216-651-11	s	METAL, CHIP 1K 0.5% 1/10W
R449	1-216-049-00	s	METAL, CHIP 1K 5% 1/10W
R451	1-216-073-00	s	METAL, CHIP 10K 5% 1/10W
R452	1-216-647-11	s	METAL, CHIP 680 0.5% 1/10W
R454	1-216-089-00	s	METAL, CHIP 47K 5% 1/10W
R465	1-216-089-00	s	METAL, CHIP 47K 5% 1/10W
R466	1-216-673-11	s	METAL, CHIP 8.2K 0.5% 1/10W
R467	1-216-673-11	s	METAL, CHIP 8.2K 0.5% 1/10W
R468	1-216-651-11	s	METAL, CHIP 1K 0.5% 1/10W
R469	1-216-055-00	s	METAL, CHIP 1.8K 5% 1/10W
R470	1-216-091-00	s	METAL, CHIP 56K 5% 1/10W
R471	1-216-073-00	s	METAL, CHIP 10K 5% 1/10W
R472	1-216-073-00	s	METAL, CHIP 10K 5% 1/10W
R474	1-216-674-11	s	METAL, CHIP 9.1K 0.5% 1/10W
R475	1-216-687-11	s	METAL, CHIP 33K 0.5% 1/10W
R478	1-216-649-11	s	METAL, CHIP 820 0.5% 1/10W
R500	1-216-013-00	s	METAL, CHIP 33 5% 1/10W
R501	1-216-049-00	s	METAL, CHIP 1K 5% 1/10W
R502	1-216-073-00	s	METAL, CHIP 10K 5% 1/10W
R504	1-216-089-00	s	METAL, CHIP 47K 5% 1/10W
R505	1-216-041-00	s	METAL, CHIP 470 5% 1/10W
R506	1-216-639-11	s	METAL, CHIP 330 0.5% 1/10W

(VO-47A BOARD(SVO-5800P))

Ref. No. or Q'ty	Part No.	SP	Description
R507	1-216-639-11	s	METAL, CHIP 330 0.5% 1/10W
R508	1-216-073-00	s	METAL, CHIP 10K 5% 1/10W
R509	1-216-659-11	s	METAL, CHIP 2.2K 0.5% 1/10W
R510	1-216-085-00	s	METAL, CHIP 33K 5% 1/10W
R511	1-216-049-00	s	METAL, CHIP 1K 5% 1/10W
R512	1-216-077-00	s	METAL, CHIP 15K 5% 1/10W
R513	1-216-651-11	s	METAL, CHIP 1K 0.5% 1/10W
R514	1-216-049-00	s	METAL, CHIP 1K 5% 1/10W
R515	1-208-789-11	s	METAL, CHIP 2K 0.5% 1/10W
R516	1-216-295-91	s	RES, CHIP 0
R517	1-216-651-11	s	METAL, CHIP 1K 0.5% 1/10W
R518	1-216-655-11	s	METAL, CHIP 1.5K 0.5% 1/10W
R519	1-216-632-11	s	METAL, CHIP 160 0.5% 1/10W
R520	1-216-295-91	s	RES, CHIP 0
R521	1-208-775-11	s	METAL, CHIP 510 0.50% 1/10W
R522	1-216-657-11	s	METAL, CHIP 1.8K 0.5% 1/10W
R523	1-208-774-11	s	METAL, CHIP 470 0.50% 1/10W
R524	1-216-049-00	s	METAL, CHIP 1K 5% 1/10W
R525	1-216-651-11	s	METAL, CHIP 1K 0.5% 1/10W
R526	1-216-647-11	s	METAL, CHIP 680 0.5% 1/10W
R527	1-216-641-11	s	METAL, CHIP 390 0.5% 1/10W
R528	1-216-699-11	s	METAL, CHIP 100K 0.5% 1/10W
R529	1-216-651-11	s	METAL, CHIP 1K 0.5% 1/10W
R530	1-216-631-11	s	METAL, CHIP 150 0.5% 1/10W
R531	1-216-635-11	s	METAL, CHIP 220 0.5% 1/10W
R533	1-216-081-00	s	METAL, CHIP 22K 5% 1/10W
R534	1-216-067-00	s	METAL, CHIP 5.6K 5% 1/10W
R535	1-216-667-11	s	METAL, CHIP 4.7K 0.5% 1/10W
R536	1-216-081-00	s	METAL, CHIP 22K 5% 1/10W
R537	1-216-663-11	s	METAL, CHIP 3.3K 0.5% 1/10W
R538	1-216-675-11	s	METAL, CHIP 10K 0.5% 1/10W
R539	1-216-121-00	s	METAL, CHIP 1M 5% 1/10W
R540	1-216-073-00	s	METAL, CHIP 10K 5% 1/10W
R541	1-216-073-00	s	METAL, CHIP 10K 5% 1/10W
R542	1-216-073-00	s	METAL, CHIP 10K 5% 1/10W
R543	1-216-073-00	s	METAL, CHIP 10K 5% 1/10W
R544	1-216-049-00	s	METAL, CHIP 1K 5% 1/10W
R545	1-216-657-11	s	METAL, CHIP 1.8K 0.5% 1/10W
R546	1-216-659-11	s	METAL, CHIP 2.2K 0.5% 1/10W
R549	1-216-295-91	s	RES, CHIP 0
R551	1-216-651-11	s	METAL, CHIP 1K 0.5% 1/10W
R554	1-216-295-91	s	RES, CHIP 0
R556	1-208-774-11	s	METAL, CHIP 470 0.50% 1/10W
R557	1-216-073-00	s	METAL, CHIP 10K 5% 1/10W
R558	1-216-041-00	s	METAL, CHIP 470 5% 1/10W
R559	1-216-625-11	s	METAL, CHIP 82 0.5% 1/10W
R560	1-216-033-00	s	METAL, CHIP 220 5% 1/10W
R561	1-216-049-00	s	METAL, CHIP 1K 5% 1/10W
R562	1-216-073-00	s	METAL, CHIP 10K 5% 1/10W
R563	1-216-051-00	s	METAL, CHIP 1.2K 5% 1/10W
R564	1-216-073-00	s	METAL, CHIP 10K 5% 1/10W
R565	1-216-665-11	s	METAL, CHIP 3.9K 0.5% 1/10W
R566	1-216-049-00	s	METAL, CHIP 1K 5% 1/10W
R567	1-216-067-00	s	METAL, CHIP 5.6K 5% 1/10W
R568	1-216-035-00	s	METAL, CHIP 270 5% 1/10W
R569	1-216-049-00	s	METAL, CHIP 1K 5% 1/10W
R570	1-216-049-00	s	METAL, CHIP 1K 5% 1/10W
R571	1-216-081-00	s	METAL, CHIP 22K 5% 1/10W
R572	1-216-081-00	s	METAL, CHIP 22K 5% 1/10W

(VO-47A BOARD(SVO-5800P))

Ref. No. or Q'ty	Part No.	SP	Description
R573	1-216-651-11	s	METAL, CHIP 1K 0.5% 1/10W
R574	1-216-049-00	s	METAL, CHIP 1K 5% 1/10W
R575	1-216-639-11	s	METAL, CHIP 330 0.5% 1/10W
R576	1-216-295-91	s	RES, CHIP 0
R577	1-216-049-00	s	METAL, CHIP 1K 5% 1/10W
R578	1-216-081-00	s	METAL, CHIP 22K 5% 1/10W
R579	1-216-051-00	s	METAL, CHIP 1.2K 5% 1/10W
R580	1-216-049-00	s	METAL, CHIP 1K 5% 1/10W
R581	1-216-073-00	s	METAL, CHIP 10K 5% 1/10W
R582	1-216-655-11	s	METAL, CHIP 1.5K 0.5% 1/10W
R583	1-216-057-00	s	METAL, CHIP 2.2K 5% 1/10W
R584	1-216-073-00	s	METAL, CHIP 10K 5% 1/10W
R585	1-216-057-00	s	METAL, CHIP 2.2K 5% 1/10W
R586	1-216-049-00	s	METAL, CHIP 1K 5% 1/10W
R587	1-208-784-11	s	METAL, CHIP 1.2K 0.50% 1/10W
R588	1-216-295-91	s	RES, CHIP 0
R590	1-216-295-91	s	RES, CHIP 0
R591	1-216-295-91	s	RES, CHIP 0
R593	1-216-295-91	s	RES, CHIP 0
R594	1-216-667-11	s	METAL, CHIP 4.7K 0.5% 1/10W
R595	1-216-667-11	s	METAL, CHIP 4.7K 0.5% 1/10W
R596	1-216-049-00	s	METAL, CHIP 1K 5% 1/10W
R597	1-216-073-00	s	METAL, CHIP 10K 5% 1/10W
R598	1-216-073-00	s	METAL, CHIP 10K 5% 1/10W
R599	1-216-691-11	s	METAL, CHIP 47K 0.5% 1/10W
R600	1-216-063-00	s	METAL, CHIP 3.9K 5% 1/10W
R601	1-216-683-11	s	METAL, CHIP 22K 0.5% 1/10W
R602	1-216-651-11	s	METAL, CHIP 1K 0.5% 1/10W
R603	1-216-651-11	s	METAL, CHIP 1K 0.5% 1/10W
R604	1-216-295-91	s	RES, CHIP 0
R605	1-216-635-11	s	METAL, CHIP 220 0.5% 1/10W
R606	1-216-295-91	s	RES, CHIP 0
R608	1-216-057-00	s	METAL, CHIP 2.2K 5% 1/10W
R610	1-216-065-00	s	METAL, CHIP 4.7K 5% 1/10W
R611	1-216-049-00	s	METAL, CHIP 1K 5% 1/10W
R614	1-216-295-91	s	RES, CHIP 0
R615	1-216-073-00	s	METAL, CHIP 10K 5% 1/10W
R616	1-216-295-91	s	RES, CHIP 0
R617	1-216-295-91	s	RES, CHIP 0
R619	1-216-041-00	s	METAL, CHIP 470 5% 1/10W
R620	1-216-651-11	s	METAL, CHIP 1K 0.5% 1/10W
R621	1-216-663-11	s	METAL, CHIP 3.3K 0.5% 1/10W
R622	1-216-089-00	s	METAL, CHIP 47K 5% 1/10W
R623	1-216-655-11	s	METAL, CHIP 1.5K 0.5% 1/10W
R624	1-216-667-11	s	METAL, CHIP 4.7K 0.5% 1/10W
R625	1-216-077-00	s	METAL, CHIP 15K 5% 1/10W
R626	1-216-650-11	s	METAL, CHIP 910 0.5% 1/10W
R629	1-216-091-00	s	METAL, CHIP 56K 5% 1/10W
R630	1-216-073-00	s	METAL, CHIP 10K 5% 1/10W
R631	1-216-073-00	s	METAL, CHIP 10K 5% 1/10W
R633	1-216-671-11	s	METAL, CHIP 6.8K 0.5% 1/10W
R634	1-216-687-11	s	METAL, CHIP 33K 0.5% 1/10W
R635	1-216-652-11	s	METAL, CHIP 1.1K 0.5% 1/10W
R636	1-216-641-11	s	METAL, CHIP 390 0.5% 1/10W
R639	1-216-295-91	s	RES, CHIP 0
R640	1-216-049-00	s	METAL, CHIP 1K 5% 1/10W
R641	1-216-057-00	s	METAL, CHIP 2.2K 5% 1/10W
R642	1-208-789-11	s	METAL, CHIP 2K 0.5% 1/10W
R643	1-216-647-11	s	METAL, CHIP 680 0.5% 1/10W

(VO-47A BOARD(SVO-5800P))

Ref. No. or Q'ty	Part No.	SP	Description
R648	1-216-295-91	s	RES, CHIP 0
R650	1-216-295-91	s	RES, CHIP 0
R700	1-216-027-00	s	METAL, CHIP 120 5% 1/10W
R701	1-216-095-00	s	METAL, CHIP 82K 5% 1/10W
R702	1-216-295-91	s	RES, CHIP 0
R703	1-216-049-00	s	METAL, CHIP 1K 5% 1/10W
R704	1-216-121-00	s	METAL, CHIP 1M 5% 1/10W
R706	1-216-295-91	s	RES, CHIP 0
R708	1-208-774-11	s	METAL, CHIP 470 0.50% 1/10W
R709	1-216-657-11	s	METAL, CHIP 1.8K 0.5% 1/10W
R711	1-216-652-11	s	METAL, CHIP 1.1K 0.5% 1/10W
R713	1-216-057-00	s	METAL, CHIP 2.2K 5% 1/10W
R714	1-216-652-11	s	METAL, CHIP 1.1K 0.5% 1/10W
R715	1-216-623-11	s	METAL, CHIP 68 0.5% 1/10W
R716	1-216-648-11	s	METAL, CHIP 750 0.5% 1/10W
R717	1-216-651-11	s	METAL, CHIP 1K 0.5% 1/10W
R720	1-216-651-11	s	METAL, CHIP 1K 0.5% 1/10W
R801	1-216-057-00	s	METAL, CHIP 2.2K 5% 1/10W
R802	1-216-057-00	s	METAL, CHIP 2.2K 5% 1/10W
R803	1-216-629-11	s	METAL, CHIP 120 0.5% 1/10W
R804	1-208-774-11	s	METAL, CHIP 470 0.50% 1/10W
R805	1-216-295-91	s	RES, CHIP 0
R806	1-216-649-11	s	METAL, CHIP 820 0.5% 1/10W
R807	1-216-081-00	s	METAL, CHIP 22K 5% 1/10W
R808	1-216-081-00	s	METAL, CHIP 22K 5% 1/10W
R809	1-216-651-11	s	METAL, CHIP 1K 0.5% 1/10W
R810	1-216-649-11	s	METAL, CHIP 820 0.5% 1/10W
R811	1-208-774-11	s	METAL, CHIP 470 0.50% 1/10W
R812	1-216-049-00	s	METAL, CHIP 1K 5% 1/10W
R813	1-216-049-00	s	METAL, CHIP 1K 5% 1/10W
R814	1-216-049-00	s	METAL, CHIP 1K 5% 1/10W
R815	1-216-651-11	s	METAL, CHIP 1K 0.5% 1/10W
R816	1-216-651-11	s	METAL, CHIP 1K 0.5% 1/10W
R818	1-216-073-00	s	METAL, CHIP 10K 5% 1/10W
R819	1-216-057-00	s	METAL, CHIP 2.2K 5% 1/10W
R820	1-216-049-00	s	METAL, CHIP 1K 5% 1/10W
R821	1-216-073-00	s	METAL, CHIP 10K 5% 1/10W
R822	1-216-073-00	s	METAL, CHIP 10K 5% 1/10W
R823	1-216-073-00	s	METAL, CHIP 10K 5% 1/10W
R824	1-216-067-00	s	METAL, CHIP 5.6K 5% 1/10W
R825	1-216-081-00	s	METAL, CHIP 22K 5% 1/10W
R826	1-216-105-91	s	METAL, CHIP 220K 5% 1/10W
R827	1-218-765-11	s	METAL, CHIP 360K 0.50% 1/10W
R828	1-216-081-00	s	METAL, CHIP 22K 5% 1/10W
R829	1-216-073-00	s	METAL, CHIP 10K 5% 1/10W
R830	1-216-073-00	s	METAL, CHIP 10K 5% 1/10W
R831	1-216-073-00	s	METAL, CHIP 10K 5% 1/10W
R832	1-216-073-00	s	METAL, CHIP 10K 5% 1/10W
R833	1-216-115-00	s	METAL, CHIP 560K 5% 1/10W
R834	1-216-049-00	s	METAL, CHIP 1K 5% 1/10W
R835	1-216-113-00	s	METAL, CHIP 470K 5% 1/10W
R836	1-216-651-11	s	METAL, CHIP 1K 0.5% 1/10W
R842	1-216-689-11	s	METAL, CHIP 39K 0.5% 1/10W
R843	1-208-812-11	s	METAL, CHIP 18K 0.5% 1/10W
R844	1-216-689-11	s	METAL, CHIP 39K 0.5% 1/10W
R845	1-216-073-00	s	METAL, CHIP 10K 5% 1/10W
R846	1-218-772-11	s	METAL 680K 0.5% 1/10W
R847	1-216-097-00	s	METAL, CHIP 100K 5% 1/10W
R848	1-216-105-91	s	METAL, CHIP 220K 5% 1/10W

(VO-47A BOARD(SVO-5800P))

Ref. No. or Q'ty	Part No.	SP	Description
R849	1-216-057-00	s	METAL, CHIP 2.2K 5% 1/10W
R850	1-216-625-11	s	METAL, CHIP 82 0.5% 1/10W
R851	1-216-065-00	s	METAL, CHIP 4.7K 5% 1/10W
R852	1-216-097-00	s	METAL, CHIP 100K 5% 1/10W
R853	1-216-121-00	s	METAL, CHIP 1M 5% 1/10W
R854	1-216-295-91	s	RES, CHIP 0
R855	1-216-295-91	s	RES, CHIP 0
R901	1-208-767-11	s	METAL, CHIP 240 0.5% 1/10W
R902	1-216-639-11	s	METAL, CHIP 330 0.5% 1/10W
R903	1-216-667-11	s	METAL, CHIP 4.7K 0.5% 1/10W
R904	1-216-677-11	s	METAL, CHIP 12K 0.5% 1/10W
R905	1-216-053-00	s	METAL, CHIP 1.5K 5% 1/10W
R906	1-216-073-00	s	METAL, CHIP 10K 5% 1/10W
R907	1-216-049-00	s	METAL, CHIP 1K 5% 1/10W
R908	1-216-049-00	s	METAL, CHIP 1K 5% 1/10W
R909	1-216-049-00	s	METAL, CHIP 1K 5% 1/10W
R910	1-216-049-00	s	METAL, CHIP 1K 5% 1/10W
R911	1-216-651-11	s	METAL, CHIP 1K 0.5% 1/10W
R912	1-216-651-11	s	METAL, CHIP 1K 0.5% 1/10W
R913	1-216-049-00	s	METAL, CHIP 1K 5% 1/10W
R914	1-216-651-11	s	METAL, CHIP 1K 0.5% 1/10W
R915	1-216-629-11	s	METAL, CHIP 120 0.5% 1/10W
R916	1-216-049-00	s	METAL, CHIP 1K 5% 1/10W
R917	1-216-649-11	s	METAL, CHIP 820 0.5% 1/10W
R918	1-216-073-00	s	METAL, CHIP 10K 5% 1/10W
R919	1-216-659-11	s	METAL, CHIP 2.2K 0.5% 1/10W
R920	1-216-659-11	s	METAL, CHIP 2.2K 0.5% 1/10W
R921	1-216-651-11	s	METAL, CHIP 1K 0.5% 1/10W
R922	1-216-651-11	s	METAL, CHIP 1K 0.5% 1/10W
R923	1-216-647-11	s	METAL, CHIP 680 0.5% 1/10W
R924	1-216-623-11	s	METAL, CHIP 68 0.5% 1/10W
R925	1-216-121-00	s	METAL, CHIP 1M 5% 1/10W
R926	1-216-027-00	s	METAL, CHIP 120 5% 1/10W
R927	1-216-095-00	s	METAL, CHIP 82K 5% 1/10W
R928	1-216-295-91	s	RES, CHIP 0
R930	1-216-049-00	s	METAL, CHIP 1K 5% 1/10W
R932	1-216-651-11	s	METAL, CHIP 1K 0.5% 1/10W
R933	1-216-645-11	s	METAL, CHIP 560 0.5% 1/10W
R934	1-216-646-11	s	METAL, CHIP 620 0.5% 1/10W
R935	1-208-784-11	s	METAL, CHIP 1.2K 0.50% 1/10W
R936	1-216-295-91	s	RES, CHIP 0
R937	1-216-641-11	s	METAL, CHIP 390 0.5% 1/10W
R938	1-216-641-11	s	METAL, CHIP 390 0.5% 1/10W
R939	1-216-659-11	s	METAL, CHIP 2.2K 0.5% 1/10W
R940	1-216-679-11	s	METAL, CHIP 15K 0.5% 1/10W
R941	1-216-667-11	s	METAL, CHIP 4.7K 0.5% 1/10W
R942	1-216-651-11	s	METAL, CHIP 1K 0.5% 1/10W
R599	1-216-690-11	s	METAL, CHIP 43K 0.5% 1/10W
R943	1-216-667-11	s	METAL, CHIP 4.7K 0.5% 1/10W
R944	1-216-666-11	s	METAL, CHIP 4.3K 0.5% 1/10W
R951	1-216-647-11	s	METAL, CHIP 680 0.5% 1/10W
R952	1-216-663-11	s	METAL, CHIP 3.3K 0.5% 1/10W
R953	1-216-065-00	s	METAL, CHIP 4.7K 5% 1/10W
R954	1-216-694-11	s	METAL, CHIP 62K 0.5% 1/10W
R955	1-216-065-00	s	METAL, CHIP 4.7K 5% 1/10W
R956	1-216-065-00	s	METAL, CHIP 4.7K 5% 1/10W
R957	1-216-099-00	s	METAL, CHIP 120K 5% 1/10W
R958	1-216-696-11	s	METAL, CHIP 75K 0.5% 1/10W
R961	1-216-065-00	s	METAL, CHIP 4.7K 5% 1/10W

(VO-47A BOARD(SVO-5800P))

Ref. No. or Q'ty	Part No.	SP	Description
R962	1-216-671-11	s	METAL, CHIP 6.8K 0.5% 1/10W
R963	1-216-671-11	s	METAL, CHIP 6.8K 0.5% 1/10W
R966	1-216-651-11	s	METAL, CHIP 1K 0.5% 1/10W
R967	1-208-784-11	s	METAL, CHIP 1.2K 0.50% 1/10W
R968	1-216-081-00	s	METAL, CHIP 22K 5% 1/10W
R969	1-216-069-00	s	METAL, CHIP 6.8K 5% 1/10W
R970	1-216-051-00	s	METAL, CHIP 1.2K 5% 1/10W
R971	1-216-037-00	s	METAL, CHIP 330 5% 1/10W
R972	1-216-057-00	s	METAL, CHIP 2.2K 5% 1/10W
R973	1-216-650-11	s	METAL, CHIP 910 0.5% 1/10W
R974	1-216-025-00	s	METAL, CHIP 100 5% 1/10W
R975	1-216-651-11	s	METAL, CHIP 1K 0.5% 1/10W
R976	1-216-675-11	s	METAL, CHIP 10K 0.5% 1/10W
R977	1-216-675-11	s	METAL, CHIP 10K 0.5% 1/10W
R978	1-216-667-11	s	METAL, CHIP 4.7K 0.5% 1/10W
R979	1-216-295-91	s	RES, CHIP 0
R980	1-216-295-91	s	RES, CHIP 0
R986	1-216-073-00	s	METAL, CHIP 10K 5% 1/10W
R987	1-216-081-00	s	METAL, CHIP 22K 5% 1/10W
R988	1-216-081-00	s	METAL, CHIP 22K 5% 1/10W
R989	1-216-077-00	s	METAL, CHIP 15K 5% 1/10W
R990	1-216-073-00	s	METAL, CHIP 10K 5% 1/10W
R991	1-216-295-91	s	RES, CHIP 0
R993	1-216-692-11	s	METAL, CHIP 51K 0.5% 1/10W
R995	1-216-687-11	s	METAL, CHIP 33K 0.5% 1/10W
R996	1-216-067-00	s	METAL, CHIP 5.6K 5% 1/10W
R998	1-216-065-00	s	METAL, CHIP 4.7K 5% 1/10W
RV11	1-241-763-11	s	RES, ADJ METAL 4.7k
RV12	1-241-630-11	s	RES, ADJ CARBON 10K
RV14	1-241-630-11	s	RES, ADJ CARBON 10K
RV15	1-241-630-11	s	RES, ADJ CARBON 10K
RV16	1-241-628-11	s	RES, ADJ CARBON 2.2K
RV17	1-241-628-11	s	RES, ADJ CARBON 2.2K
RV18	1-241-763-11	s	RES, ADJ METAL 4.7k
RV19	1-241-763-11	s	RES, ADJ METAL 4.7k
RV101	1-228-455-00	s	RES, ADJ METAL 500
RV152	1-241-760-11	s	RES, ADJ CARBON 470
RV153	1-241-760-11	s	RES, ADJ CARBON 470
RV201	1-241-760-11	s	RES, ADJ CARBON 470
RV301	1-241-759-21	s	RES, ADJ METAL 220
RV351	1-230-930-11	s	RES, ADJ CARBON 220
RV401	1-241-765-11	s	RES, ADJ CARBON 22K
RV402	1-238-019-11	s	RES, ADJ CARBON 47K
RV403	1-241-761-11	s	RES, ADJ METAL 1k
RV404	1-241-628-11	s	RES, ADJ CARBON 2.2K
RV503	1-241-630-11	s	RES, ADJ CARBON 10K
RV505	1-241-765-11	s	RES, ADJ CARBON 22K
RV700	1-241-761-11	s	RES, ADJ METAL 1k
RV701	1-241-760-11	s	RES, ADJ CARBON 470
RV901	1-241-761-11	s	RES, ADJ METAL 1k
RV902	1-241-759-21	s	RES, ADJ METAL 220
RV951	1-241-763-11	s	RES, ADJ METAL 4.7k
RV952	1-241-763-11	s	RES, ADJ METAL 4.7k
RV953	1-241-783-11	s	RES, ADJ METAL 2.2k
TH901	1-800-198-11	s	THERMISTOR, S-1K
TH902	1-809-308-11	s	THERMISTOR, CHIP
TH903	1-800-198-11	s	THERMISTOR, S-1K

(VO-47A BOARD(SVO-5800P))

Ref. No. or Q'ty	Part No.	SP	Description
X400	1-567-504-11	s	CRYSTAL 4.433619MHz

VO-47C BOARD(SVP-5600P)

Ref. No. or Q'ty	Part No.	SP	Description

VO-47C board is used for SVP-5600P(EK).

1pc	A-8265-883-A	o	MOUNTED CIRCUIT BOARD, VO-47C
1pc	3-179-084-01	s	LEVER (R), PC BOARD
1pc	3-179-085-01	s	LEVER (L), PC BOARD
C1	1-163-809-11	s	CERAMIC, CHIP 0.047uF 10% 25V
C1	1-164-346-11	s	CERAMIC 1uF 16V
C2	1-163-809-11	s	CERAMIC, CHIP 0.047uF 10% 25V
C2	1-164-489-11	s	CERAMIC, CHIP 0.22uF 10% 16V
C3	1-126-933-11	s	ELECT 100uF 20% 16V
C4	1-126-933-11	s	ELECT 100uF 20% 16V
C4	1-164-344-11	s	CERAMIC, CHIP 0.068uF 10% 25V
C5	1-163-809-11	s	CERAMIC, CHIP 0.047uF 10% 25V
C5	1-164-489-11	s	CERAMIC, CHIP 0.22uF 10% 16V
C6	1-163-809-11	s	CERAMIC, CHIP 0.047uF 10% 25V
C7	1-126-933-11	s	ELECT 100uF 20% 16V
C7	1-164-346-11	s	CERAMIC 1uF 16V
C8	1-128-065-11	s	ELECT, CHIP 68uF 20% 10V
C9	1-128-065-11	s	ELECT, CHIP 68uF 20% 10V
C10	1-163-237-11	s	CERAMIC, CHIP 27PF 5% 50V
C11	1-126-933-11	s	ELECT 100uF 20% 16V
C12	1-163-809-11	s	CERAMIC, CHIP 0.047uF 10% 25V
C13	1-163-251-11	s	CERAMIC, CHIP 100PF 5% 50V
C14	1-163-136-00	s	CERAMIC, CHIP 620PF 5% 50V
C15	1-163-249-11	s	CERAMIC, CHIP 82pF 5% 50V
C16	1-163-139-00	s	CERAMIC, CHIP 820PF 5% 50V
C17	1-163-125-00	s	CERAMIC, CHIP 220PF 5% 50V
C18	1-163-251-11	s	CERAMIC, CHIP 100PF 5% 50V
C19	1-163-241-11	s	CERAMIC, CHIP 39PF 5% 50V
C20	1-163-097-00	s	CERAMIC, CHIP 15PF 5% 50V
C21	1-109-982-11	s	CERAMIC, CHIP 1uF 10% 10V
C22	1-164-232-11	s	CERAMIC, CHIP 0.01uF 10% 100V
C23	1-164-232-11	s	CERAMIC, CHIP 0.01uF 10% 100V
C24	1-164-232-11	s	CERAMIC, CHIP 0.01uF 10% 100V
C25	1-163-037-11	s	CERAMIC, CHIP 0.022uF 10% 25V
C26-30	1-164-232-11	s	CERAMIC, CHIP 0.01uF 10% 100V
C31	1-109-982-11	s	CERAMIC, CHIP 1uF 10% 10V
C32	1-164-182-11	s	CERAMIC, CHIP 3300PF 10% 100V
C33	1-164-232-11	s	CERAMIC, CHIP 0.01uF 10% 100V
C34	1-126-933-11	s	ELECT 100uF 20% 16V
C35	1-163-809-11	s	CERAMIC, CHIP 0.047uF 10% 25V
C39	1-126-933-11	s	ELECT 100uF 20% 16V
C40	1-124-927-11	s	ELECT 4.7uF 20% 100V
C41	1-163-809-11	s	CERAMIC, CHIP 0.047uF 10% 25V
C42	1-124-927-11	s	ELECT 4.7uF 20% 100V
C43	1-164-232-11	s	CERAMIC, CHIP 0.01uF 10% 100V
C44	1-109-982-11	s	CERAMIC, CHIP 1uF 10% 10V
C45	1-164-232-11	s	CERAMIC, CHIP 0.01uF 10% 100V
C46	1-163-809-11	s	CERAMIC, CHIP 0.047uF 10% 25V
C47	1-163-809-11	s	CERAMIC, CHIP 0.047uF 10% 25V
C48	1-163-809-11	s	CERAMIC, CHIP 0.047uF 10% 25V
C49	1-163-275-11	s	CERAMIC, CHIP 0.001uF 5% 50V
C50	1-124-916-11	s	ELECT 22uF 20% 63V
C53	1-164-004-11	s	CERAMIC, CHIP 0.1uF 10% 25V
C54	1-164-232-11	s	CERAMIC, CHIP 0.01uF 10% 100V
C100	1-124-779-00	s	ELECT 10uF 20% 16V
C101	1-163-809-11	s	CERAMIC, CHIP 0.047uF 10% 25V
C102	1-126-933-11	s	ELECT 100uF 20% 16V
C102	1-164-232-11	s	CERAMIC, CHIP 0.01uF 10% 100V

(VO-47C BOARD(SVP-5600P))

Ref. No. or Q'ty	Part No.	SP	Description
C103	1-163-113-00	s	CERAMIC, CHIP 68PF 5% 50V
C104	1-163-251-11	s	CERAMIC, CHIP 100PF 5% 50V
C105	1-163-121-00	s	CERAMIC, CHIP 150PF 5% 50V
C106	1-164-232-11	s	CERAMIC, CHIP 0.01uF 10% 100V
C106	1-163-121-00	s	CERAMIC, CHIP 150PF 5% 50V
C107	1-164-232-11	s	CERAMIC, CHIP 0.01uF 10% 100V
C107	1-163-097-00	s	CERAMIC, CHIP 15PF 5% 50V
C108	1-164-232-11	s	CERAMIC, CHIP 0.01uF 10% 100V
C108	1-163-241-11	s	CERAMIC, CHIP 39PF 5% 50V
C109	1-163-235-11	s	CERAMIC, CHIP 22PF 5% 50V
C110	1-163-243-11	s	CERAMIC, CHIP 47PF 5% 50V
C111	1-164-232-11	s	CERAMIC, CHIP 0.01uF 10% 100V
C112	1-124-779-00	s	ELECT 10uF 20% 16V
C201	1-124-126-00	s	ELECT 47uF 20% 25V
C202	1-163-239-11	s	CERAMIC, CHIP 33PF 5% 50V
C203	1-163-257-11	s	CERAMIC, CHIP 180PF 5% 50V
C204	1-124-927-11	s	ELECT 4.7uF 20% 100V
C205	1-124-927-11	s	ELECT 4.7uF 20% 100V
C206	1-163-127-00	s	CERAMIC, CHIP 270PF 5% 50V
C207	1-124-126-00	s	ELECT 47uF 20% 25V
C208	1-163-809-11	s	CERAMIC, CHIP 0.047uF 10% 25V
C209	1-126-933-11	s	ELECT 100uF 20% 16V
C210	1-163-112-00	s	CERAMIC, CHIP 62PF 5% 50V
C211	1-164-491-11	s	CERAMIC, CHIP 300PF 5% 50V
C212	1-163-809-11	s	CERAMIC, CHIP 0.047uF 10% 25V
C213	1-126-933-11	s	ELECT 100uF 20% 16V
C214	1-124-126-00	s	ELECT 47uF 20% 25V
C215	1-163-097-00	s	CERAMIC, CHIP 15PF 5% 50V
C224	1-163-251-11	s	CERAMIC, CHIP 100PF 5% 50V
C301	1-163-809-11	s	CERAMIC, CHIP 0.047uF 10% 25V
C302	1-126-933-11	s	ELECT 100uF 20% 16V
C303	1-164-346-11	s	CERAMIC 1uF 16V
C304	1-164-232-11	s	CERAMIC, CHIP 0.01uF 10% 100V
C305	1-109-982-11	s	CERAMIC, CHIP 1uF 10% 10V
C306	1-164-232-11	s	CERAMIC, CHIP 0.01uF 10% 100V
C308	1-164-004-11	s	CERAMIC, CHIP 0.1uF 10% 25V
C309	1-164-232-11	s	CERAMIC, CHIP 0.01uF 10% 100V
C310	1-124-126-00	s	ELECT 47uF 20% 25V
C311	1-124-126-00	s	ELECT 47uF 20% 25V
C312	1-163-239-11	s	CERAMIC, CHIP 33PF 5% 50V
C313	1-164-232-11	s	CERAMIC, CHIP 0.01uF 10% 100V
C351	1-163-809-11	s	CERAMIC, CHIP 0.047uF 10% 25V
C352	1-126-934-11	s	ELECT 220uF 20% 16V
C354	1-126-964-11	s	ELECT 10uF 20% 50V
C355	1-124-126-00	s	ELECT 47uF 20% 25V
C356	1-163-239-11	s	CERAMIC, CHIP 33PF 5% 50V
C357	1-163-253-11	s	CERAMIC, CHIP 120PF 5% 50V
C362	1-163-239-11	s	CERAMIC, CHIP 33PF 5% 50V
C363	1-163-253-11	s	CERAMIC, CHIP 120PF 5% 50V
C364	1-163-222-11	s	CERAMIC, CHIP 5PF 50V
C365	1-124-126-00	s	ELECT 47uF 20% 25V
C366	1-124-126-00	s	ELECT 47uF 20% 25V
C367	1-124-126-00	s	ELECT 47uF 20% 25V
C368	1-163-239-11	s	CERAMIC, CHIP 33PF 5% 50V
C369	1-124-126-00	s	ELECT 47uF 20% 25V
C370	1-126-933-11	s	ELECT 100uF 20% 16V
C371	1-164-346-11	s	CERAMIC 1uF 16V
C372	1-163-239-11	s	CERAMIC, CHIP 33PF 5% 50V
C373	1-163-809-11	s	CERAMIC, CHIP 0.047uF 10% 25V

(VO-47C BOARD(SVP-5600P))

Ref. No. or Q'ty	Part No.	SP	Description
C374	1-126-934-11	s	ELECT 220uF 20% 16V
C500	1-163-037-11	s	CERAMIC, CHIP 0.022uF 10% 25V
C503	1-163-809-11	s	CERAMIC, CHIP 0.047uF 10% 25V
C504	1-163-263-11	s	CERAMIC, CHIP 330PF 5% 50V
C505	1-163-239-11	s	CERAMIC, CHIP 33PF 5% 50V
C506	1-164-004-11	s	CERAMIC, CHIP 0.1uF 10% 25V
C507	1-163-251-11	s	CERAMIC, CHIP 100PF 5% 50V
C508	1-163-125-00	s	CERAMIC, CHIP 220PF 5% 50V
C510	1-163-097-00	s	CERAMIC, CHIP 15PF 5% 50V
C511	1-163-089-00	s	CERAMIC, CHIP 6PF 50V
C514	1-163-241-11	s	CERAMIC, CHIP 39PF 5% 50V
C515	1-164-232-11	s	CERAMIC, CHIP 0.01uF 10% 100V
C516	1-164-004-11	s	CERAMIC, CHIP 0.1uF 10% 25V
C517	1-164-182-11	s	CERAMIC, CHIP 3300PF 10% 100V
C518	1-164-161-11	s	CERAMIC, CHIP 0.0022uF 10% 100V
C520	1-163-809-11	s	CERAMIC, CHIP 0.047uF 10% 25V
C521	1-163-809-11	s	CERAMIC, CHIP 0.047uF 10% 25V
C522	1-126-933-11	s	ELECT 100uF 20% 16V
C523	1-163-809-11	s	CERAMIC, CHIP 0.047uF 10% 25V
C524	1-163-239-11	s	CERAMIC, CHIP 33PF 5% 50V
C525	1-164-232-11	s	CERAMIC, CHIP 0.01uF 10% 100V
C528	1-164-004-11	s	CERAMIC, CHIP 0.1uF 10% 25V
C529	1-126-933-11	s	ELECT 100uF 20% 16V
C530	1-164-232-11	s	CERAMIC, CHIP 0.01uF 10% 100V
C531	1-163-809-11	s	CERAMIC, CHIP 0.047uF 10% 25V
C532-539	1-164-232-11	s	CERAMIC, CHIP 0.01uF 10% 100V
C541	1-164-004-11	s	CERAMIC, CHIP 0.1uF 10% 25V
C542	1-163-133-00	s	CERAMIC, CHIP 470PF 5% 50V
C543	1-163-809-11	s	CERAMIC, CHIP 0.047uF 10% 25V
C544	1-163-809-11	s	CERAMIC, CHIP 0.047uF 10% 25V
C545	1-124-126-00	s	ELECT 47uF 20% 25V
C546	1-164-232-11	s	CERAMIC, CHIP 0.01uF 10% 100V
C547	1-163-275-11	s	CERAMIC, CHIP 0.001uF 5% 50V
C548	1-124-126-00	s	ELECT 47uF 20% 25V
C549	1-164-232-11	s	CERAMIC, CHIP 0.01uF 10% 100V
C550	1-164-232-11	s	CERAMIC, CHIP 0.01uF 10% 100V
C551	1-163-125-00	s	CERAMIC, CHIP 220PF 5% 50V
C552	1-164-232-11	s	CERAMIC, CHIP 0.01uF 10% 100V
C553	1-164-232-11	s	CERAMIC, CHIP 0.01uF 10% 100V
C554	1-163-257-11	s	CERAMIC, CHIP 180PF 5% 50V
C555	1-164-232-11	s	CERAMIC, CHIP 0.01uF 10% 100V
C556	1-164-232-11	s	CERAMIC, CHIP 0.01uF 10% 100V
C557	1-163-220-11	s	CERAMIC, CHIP 3PF 50V
C558	1-164-232-11	s	CERAMIC, CHIP 0.01uF 10% 100V
C559	1-104-663-11	s	ELECT 33uF 20% 25V
C560	1-164-232-11	s	CERAMIC, CHIP 0.01uF 10% 100V
C561	1-163-133-00	s	CERAMIC, CHIP 470PF 5% 50V
C562	1-164-004-11	s	CERAMIC, CHIP 0.1uF 10% 25V
C563	1-131-377-00	s	TANTALUM 10uF 10% 10V
C564	1-163-037-11	s	CERAMIC, CHIP 0.022uF 10% 25V
C565	1-164-232-11	s	CERAMIC, CHIP 0.01uF 10% 100V
C566	1-164-004-11	s	CERAMIC, CHIP 0.1uF 10% 25V
C567	1-164-232-11	s	CERAMIC, CHIP 0.01uF 10% 100V
C568	1-163-227-11	s	CERAMIC, CHIP 10PF 5% 50V
C570	1-126-933-11	s	ELECT 100uF 20% 16V
C571	1-163-809-11	s	CERAMIC, CHIP 0.047uF 10% 25V
C572	1-163-809-11	s	CERAMIC, CHIP 0.047uF 10% 25V
C573	1-124-126-00	s	ELECT 47uF 20% 25V
C574	1-163-809-11	s	CERAMIC, CHIP 0.047uF 10% 25V

(VO-47C BOARD(SVP-5600P))

Ref. No. or Q'ty	Part No.	SP	Description
C575	1-124-126-00	s	ELECT 47uF 20% 25V
C578	1-131-351-00	s	TANTALUM 4.7uF 10% 35V
C579	1-163-037-11	s	CERAMIC, CHIP 0.022uF 10% 25V
C580	1-164-232-11	s	CERAMIC, CHIP 0.01uF 10% 100V
C581	1-131-349-00	s	TANTALUM 2.2uF 10% 35V
C588	1-126-934-11	s	ELECT 220uF 20% 16V
C589	1-164-004-11	s	CERAMIC, CHIP 0.1uF 10% 25V
C590	1-164-004-11	s	CERAMIC, CHIP 0.1uF 10% 25V
C591	1-163-251-11	s	CERAMIC, CHIP 100PF 5% 50V
C592	1-164-489-11	s	CERAMIC, CHIP 0.22uF 10% 16V
C593	1-164-232-11	s	CERAMIC, CHIP 0.01uF 10% 100V
C594	1-164-232-11	s	CERAMIC, CHIP 0.01uF 10% 100V
C595	1-164-232-11	s	CERAMIC, CHIP 0.01uF 10% 100V
C596	1-163-251-11	s	CERAMIC, CHIP 100PF 5% 50V
C597	1-163-251-11	s	CERAMIC, CHIP 100PF 5% 50V
C598	1-163-809-11	s	CERAMIC, CHIP 0.047uF 10% 25V
C605	1-163-237-11	s	CERAMIC, CHIP 27PF 5% 50V
C606	1-163-275-11	s	CERAMIC, CHIP 0.001uF 5% 50V
C607	1-163-012-00	s	CERAMIC, CHIP 1800PF 10% 50V
C608	1-163-017-00	s	CERAMIC, CHIP 0.0047uF 5% 50V
C609	1-164-232-11	s	CERAMIC, CHIP 0.01uF 10% 100V
C700	1-164-232-11	s	CERAMIC, CHIP 0.01uF 10% 100V
C701	1-164-232-11	s	CERAMIC, CHIP 0.01uF 10% 100V
C702	1-126-111-11	s	ELECT 3.3uF 20% 100V
C703	1-164-004-11	s	CERAMIC, CHIP 0.1uF 10% 25V
C704	1-164-232-11	s	CERAMIC, CHIP 0.01uF 10% 100V
C705	1-126-111-11	s	ELECT 3.3uF 20% 100V
C706	1-164-232-11	s	CERAMIC, CHIP 0.01uF 10% 100V
C707	1-164-232-11	s	CERAMIC, CHIP 0.01uF 10% 100V
C708	1-164-232-11	s	CERAMIC, CHIP 0.01uF 10% 100V
C709	1-163-241-11	s	CERAMIC, CHIP 39PF 5% 50V
C710	1-163-087-00	s	CERAMIC, CHIP 4PF 50V
C711	1-163-110-00	s	CERAMIC, CHIP 51PF 5% 50V
C712	1-163-229-11	s	CERAMIC, CHIP 12PF 5% 50V
C713	1-163-239-11	s	CERAMIC, CHIP 33PF 5% 50V
C714	1-163-239-11	s	CERAMIC, CHIP 33PF 5% 50V
C715	1-163-224-11	s	CERAMIC, CHIP 7PF 50V
C716	1-163-239-11	s	CERAMIC, CHIP 33PF 5% 50V
C717	1-163-227-11	s	CERAMIC, CHIP 10PF 5% 50V
C718	1-163-239-11	s	CERAMIC, CHIP 33PF 5% 50V
C719	1-163-224-11	s	CERAMIC, CHIP 7PF 50V
C720	1-163-239-11	s	CERAMIC, CHIP 33PF 5% 50V
C721	1-163-224-11	s	CERAMIC, CHIP 7PF 50V
C722	1-163-235-11	s	CERAMIC, CHIP 22PF 5% 50V
C801	1-164-346-11	s	CERAMIC 1uF 16V
C802	1-164-232-11	s	CERAMIC, CHIP 0.01uF 10% 100V
C805	1-164-232-11	s	CERAMIC, CHIP 0.01uF 10% 100V
C807	1-164-232-11	s	CERAMIC, CHIP 0.01uF 10% 100V
C808	1-163-245-11	s	CERAMIC, CHIP 56PF 5% 50V
C809	1-164-232-11	s	CERAMIC, CHIP 0.01uF 10% 100V
C810	1-124-927-11	s	ELECT 4.7uF 20% 100V
C811	1-164-232-11	s	CERAMIC, CHIP 0.01uF 10% 100V
C812	1-163-809-11	s	CERAMIC, CHIP 0.047uF 10% 25V
C813	1-164-232-11	s	CERAMIC, CHIP 0.01uF 10% 100V
C814	1-124-126-00	s	ELECT 47uF 20% 25V
C815	1-163-809-11	s	CERAMIC, CHIP 0.047uF 10% 25V
C816	1-164-232-11	s	CERAMIC, CHIP 0.01uF 10% 100V
C817	1-164-232-11	s	CERAMIC, CHIP 0.01uF 10% 100V
C818	1-164-232-11	s	CERAMIC, CHIP 0.01uF 10% 100V

(VO-47C BOARD(SVP-5600P))

Ref. No. or Q'ty	Part No.	SP	Description
C819	1-164-232-11	s	CERAMIC, CHIP 0.01uF 10% 100V
C820	1-164-232-11	s	CERAMIC, CHIP 0.01uF 10% 100V
C821	1-164-232-11	s	CERAMIC, CHIP 0.01uF 10% 100V
C822	1-164-232-11	s	CERAMIC, CHIP 0.01uF 10% 100V
C823	1-164-232-11	s	CERAMIC, CHIP 0.01uF 10% 100V
C824	1-164-232-11	s	CERAMIC, CHIP 0.01uF 10% 100V
C825	1-164-232-11	s	CERAMIC, CHIP 0.01uF 10% 100V
C826	1-163-809-11	s	CERAMIC, CHIP 0.047uF 10% 25V
C827	1-164-232-11	s	CERAMIC, CHIP 0.01uF 10% 100V
C828	1-124-925-11	s	ELECT 2.2uF 20% 100V
C829	1-164-343-11	s	CERAMIC, CHIP 0.056uF 10% 25V
C830	1-163-809-11	s	CERAMIC, CHIP 0.047uF 10% 25V
C831	1-163-125-00	s	CERAMIC, CHIP 220PF 5% 50V
C832	1-163-809-11	s	CERAMIC, CHIP 0.047uF 10% 25V
C833	1-163-275-11	s	CERAMIC, CHIP 0.001uF 5% 50V
C834	1-163-275-11	s	CERAMIC, CHIP 0.001uF 5% 50V
C835	1-163-809-11	s	CERAMIC, CHIP 0.047uF 10% 25V
C838	1-163-251-11	s	CERAMIC, CHIP 100PF 5% 50V
C839	1-163-251-11	s	CERAMIC, CHIP 100PF 5% 50V
C840	1-163-275-11	s	CERAMIC, CHIP 0.001uF 5% 50V
C841	1-163-251-11	s	CERAMIC, CHIP 100PF 5% 50V
C842	1-163-275-11	s	CERAMIC, CHIP 0.001uF 5% 50V
C843	1-163-251-11	s	CERAMIC, CHIP 100PF 5% 50V
C844	1-163-133-00	s	CERAMIC, CHIP 470PF 5% 50V
C845	1-163-097-00	s	CERAMIC, CHIP 15PF 5% 50V
C850	1-163-235-11	s	CERAMIC, CHIP 22PF 5% 50V
C901	1-163-229-11	s	CERAMIC, CHIP 12PF 5% 50V
C902	1-163-227-11	s	CERAMIC, CHIP 10PF 5% 50V
C903	1-164-232-11	s	CERAMIC, CHIP 0.01uF 10% 100V
C904	1-164-232-11	s	CERAMIC, CHIP 0.01uF 10% 100V
C905	1-164-232-11	s	CERAMIC, CHIP 0.01uF 10% 100V
C906	1-164-232-11	s	CERAMIC, CHIP 0.01uF 10% 100V
C909	1-164-232-11	s	CERAMIC, CHIP 0.01uF 10% 100V
C911	1-163-243-11	s	CERAMIC, CHIP 47PF 5% 50V
C912	1-163-037-11	s	CERAMIC, CHIP 0.022uF 10% 25V
C913	1-164-232-11	s	CERAMIC, CHIP 0.01uF 10% 100V
C914	1-164-232-11	s	CERAMIC, CHIP 0.01uF 10% 100V
C915	1-164-232-11	s	CERAMIC, CHIP 0.01uF 10% 100V
C916	1-109-982-11	s	CERAMIC, CHIP 1uF 10% 10V
C917	1-124-126-00	s	ELECT 47uF 20% 25V
C918	1-163-037-11	s	CERAMIC, CHIP 0.022uF 10% 25V
C919	1-163-809-11	s	CERAMIC, CHIP 0.047uF 10% 25V
C922	1-163-243-11	s	CERAMIC, CHIP 47PF 5% 50V
C923	1-164-232-11	s	CERAMIC, CHIP 0.01uF 10% 100V
C924	1-164-232-11	s	CERAMIC, CHIP 0.01uF 10% 100V
C926	1-126-111-11	s	ELECT 3.3uF 20% 100V
C927	1-164-004-11	s	CERAMIC, CHIP 0.1uF 10% 25V
C928	1-164-232-11	s	CERAMIC, CHIP 0.01uF 10% 100V
C929	1-126-111-11	s	ELECT 3.3uF 20% 100V
C930	1-164-232-11	s	CERAMIC, CHIP 0.01uF 10% 100V
C931	1-164-232-11	s	CERAMIC, CHIP 0.01uF 10% 100V
C932	1-163-241-11	s	CERAMIC, CHIP 39PF 5% 50V
C933	1-163-087-00	s	CERAMIC, CHIP 4PF 50V
C934	1-163-110-00	s	CERAMIC, CHIP 51PF 5% 50V
C935	1-163-229-11	s	CERAMIC, CHIP 12PF 5% 50V
C936	1-163-239-11	s	CERAMIC, CHIP 33PF 5% 50V
C951	1-164-004-11	s	CERAMIC, CHIP 0.1uF 10% 25V
C952	1-164-232-11	s	CERAMIC, CHIP 0.01uF 10% 100V
C953	1-126-964-11	s	ELECT 10uF 20% 50V

(VO-47C BOARD(SVP-5600P))

Ref. No. or Q'ty	Part No.	SP	Description
C954	1-163-023-00	s	CERAMIC, CHIP 0.015uF 5% 50V
C955	1-163-135-00	s	CERAMIC, CHIP 560PF 5% 50V
C956	1-163-121-00	s	CERAMIC, CHIP 150PF 5% 50V
C957-961	1-164-232-11	s	CERAMIC, CHIP 0.01uF 10% 100V
C962	1-164-004-11	s	CERAMIC, CHIP 0.1uF 10% 25V
C963	1-163-237-11	s	CERAMIC, CHIP 27PF 5% 50V
C964	1-163-222-11	s	CERAMIC, CHIP 5PF 50V
C965	1-163-239-11	s	CERAMIC, CHIP 33PF 5% 50V
C966	1-163-097-00	s	CERAMIC, CHIP 15PF 5% 50V
C967	1-163-235-11	s	CERAMIC, CHIP 22PF 5% 50V
C968	1-164-232-11	s	CERAMIC, CHIP 0.01uF 10% 100V
C970	1-164-232-11	s	CERAMIC, CHIP 0.01uF 10% 100V
C971	1-164-232-11	s	CERAMIC, CHIP 0.01uF 10% 100V
C972	1-164-232-11	s	CERAMIC, CHIP 0.01uF 10% 100V
C974	1-164-232-11	s	CERAMIC, CHIP 0.01uF 10% 100V
C975	1-164-344-11	s	CERAMIC, CHIP 0.068uF 10% 25V
C976	1-164-344-11	s	CERAMIC, CHIP 0.068uF 10% 25V
C977	1-164-004-11	s	CERAMIC, CHIP 0.1uF 10% 25V
C978	1-164-232-11	s	CERAMIC, CHIP 0.01uF 10% 100V
C979	1-164-004-11	s	CERAMIC, CHIP 0.1uF 10% 25V
C980	1-126-933-11	s	ELECT 100uF 20% 16V
C981	1-164-232-11	s	CERAMIC, CHIP 0.01uF 10% 100V
C982	1-164-232-11	s	CERAMIC, CHIP 0.01uF 10% 100V
C983	1-164-232-11	s	CERAMIC, CHIP 0.01uF 10% 100V
C984	1-164-232-11	s	CERAMIC, CHIP 0.01uF 10% 100V
C985	1-163-986-00	s	CERAMIC 0.027uF 10% 25V
C986	1-164-344-11	s	CERAMIC, CHIP 0.068uF 10% 25V
C987	1-163-121-00	s	CERAMIC, CHIP 150PF 5% 50V
C988	1-164-344-11	s	CERAMIC, CHIP 0.068uF 10% 25V
C989	1-163-809-11	s	CERAMIC, CHIP 0.047uF 10% 25V
C990	1-163-809-11	s	CERAMIC, CHIP 0.047uF 10% 25V
C991	1-163-809-11	s	CERAMIC, CHIP 0.047uF 10% 25V
C992	1-163-809-11	s	CERAMIC, CHIP 0.047uF 10% 25V
C993	1-163-251-11	s	CERAMIC, CHIP 100PF 5% 50V
C994	1-163-131-00	s	CERAMIC, CHIP 390PF 5% 50V
C995	1-163-137-00	s	CERAMIC, CHIP 680PF 5% 50V
CF100	1-527-604-00	s	FILTER, CERAMIC 3.58MHz
CN201	1-766-793-11	o	CONNECTOR, DIN 64P, MALE
CN202	1-766-793-11	o	CONNECTOR, DIN 64P, MALE
CN501	1-566-085-11	s	CONNECTOR, 20P, MALE
CN502	1-566-085-11	s	CONNECTOR, 20P, MALE
CN504	1-566-085-11	s	CONNECTOR, 20P, MALE
CT500	1-141-390-11	s	CAP, TRIMMER 90PF
CV100	1-141-424-11	s	CAP, TRIMMER, CHIP 30pF
D10	8-719-801-78	s	DIODE 1S2837-T1
D11	8-719-801-78	s	DIODE 1S2837-T1
D13	8-719-801-78	s	DIODE 1S2837-T1
D201	8-719-801-78	s	DIODE 1S2837-T1
D351	8-719-018-80	s	DIODE ND411G-2-T1
D500	8-719-801-78	s	DIODE 1S2837-T1
D503	8-719-800-76	s	DIODE 1SS226
D504	8-719-018-80	s	DIODE ND411G-2-T1
D505	8-719-801-78	s	DIODE 1S2837-T1
D801	8-719-104-34	s	DIODE 1S2835
D803-811	8-719-801-78	s	DIODE 1S2837-T1
D901	8-719-800-76	s	DIODE 1SS226

(VO-47C BOARD(SVP-5600P))

Ref. No. or Q'ty	Part No.	SP	Description
D902	8-719-801-78	s	DIODE 1S2837-T1
D951	8-719-801-78	s	DIODE 1S2837-T1
D952	8-719-801-78	s	DIODE 1S2837-T1
D953	8-719-801-78	s	DIODE 1S2837-T1
D954	8-719-018-80	s	DIODE ND411G-2-T1
DL201	1-415-677-11	s	DELAY LINE 370ns
DL351	1-406-688-11	s	DELAY LINE 760ns
DL352	1-415-559-11	s	DELAY LINE 610ns
FL101	1-236-716-11	s	FILTER, LOW-PASS 5MHz
FL102	1-236-911-11	s	FILTER, LOW-PASS 3MHz
FL301	1-239-010-11	s	FILTER, LOW-PASS 5MHz
FL500	1-239-978-11	s	FILTER, BAND-PASS 4.43MHz
FL502	1-239-977-11	s	FILTER, BAND-PASS 5.06MHz
IC1	8-759-172-41	s	IC L78M09T-TL
IC1	8-759-925-76	s	IC SN74HC08ANS
IC2	8-759-182-84	s	IC PQ05SZ5U
IC11	8-759-285-14	s	IC AN3250FAP
IC201	8-759-051-54	s	IC VC2076MP
IC301	8-752-340-25	s	IC CXL5505M-T4
IC501	8-759-634-93	s	IC M52059AFP
IC502	8-759-172-41	s	IC L78M09T-TL
IC503	8-759-239-55	s	IC TC74HC123AF
IC505	8-759-182-84	s	IC PQ05SZ5U
IC700	8-752-333-24	s	IC CXL1506M-T4
IC701	1-810-661-11	s	HIC BX6544 (BP-028)
IC801	8-759-710-07	s	IC NJM2234M
IC802	8-759-008-98	s	IC MC14040BF-T2
IC803	8-759-710-86	s	IC NJM2233BM-T1
IC804	8-759-969-13	s	IC SN16913P
IC805	8-759-908-17	s	IC TL082CPS
IC806	8-759-008-82	s	IC MC14013BF
IC807	8-759-009-11	s	IC MC14070BF
IC808	8-759-239-55	s	IC TC74HC123AF
IC809	8-759-009-51	s	IC MC14538BF
IC810	8-759-008-82	s	IC MC14013BF
IC901	8-759-421-07	s	IC AN3497SB-E2
IC902	8-752-333-24	s	IC CXL1506M-T4
IC951	8-759-098-22	s	IC M52350FP
IC952	8-759-710-07	s	IC NJM2234M
L11	1-410-482-31	s	INDUCTOR 100uH
L12	1-408-422-00	s	INDUCTOR 120uH
L13	1-410-478-11	s	INDUCTOR 47uH
L14	1-410-482-31	s	INDUCTOR 100uH
L15	1-410-482-31	s	INDUCTOR 100uH
L16	1-410-482-31	s	INDUCTOR 100uH
L100	1-408-785-21	s	INDUCTOR, CHIP 47uH
L101	1-408-785-21	s	INDUCTOR, CHIP 47uH
L101	1-410-482-31	s	INDUCTOR 100uH
L102	1-408-416-00	s	INDUCTOR 39uH
L201	1-410-482-31	s	INDUCTOR 100uH
L202	1-410-482-31	s	INDUCTOR 100uH
L301	1-410-482-31	s	INDUCTOR 100uH
L302	1-408-397-00	s	INDUCTOR 1uH
L304	1-410-470-11	s	INDUCTOR 10uH
L351	1-410-482-31	s	INDUCTOR 100uH
L352	1-408-411-00	s	INDUCTOR 15uH
L353	1-410-482-31	s	INDUCTOR 100uH
L354	1-408-413-00	s	INDUCTOR 22uH

(VO-47C BOARD(SVP-5600P))

Ref. No. or Q'ty	Part No.	SP	Description
L355	1-408-411-00	s	INDUCTOR 15uH
L356	1-410-473-11	s	INDUCTOR 18uH
L500	1-408-425-00	s	INDUCTOR 220uH
L501	1-408-425-00	s	INDUCTOR 220uH
L502	1-410-482-31	s	INDUCTOR 100uH
L504	1-408-419-00	s	INDUCTOR 68uH
L506	1-408-424-00	s	INDUCTOR 180uH
L509	1-410-482-31	s	INDUCTOR 100uH
L510	1-410-482-31	s	INDUCTOR 100uH
L511	1-408-420-00	s	INDUCTOR 82uH
L512	1-408-419-00	s	INDUCTOR 68uH
L513	1-410-482-31	s	INDUCTOR 100uH
L515	1-410-482-31	s	INDUCTOR 100uH
L516	1-407-496-00	s	INDUCTOR 2.2mH
L517	1-410-120-11	s	INDUCTOR 1.2mH
L701	1-410-478-11	s	INDUCTOR 47uH
L702	1-408-414-00	s	INDUCTOR 27uH
L703	1-408-413-00	s	INDUCTOR 22uH
L704	1-408-413-00	s	INDUCTOR 22uH
L705	1-408-414-00	s	INDUCTOR 27uH
L706	1-410-482-31	s	INDUCTOR 100uH
L707	1-408-414-00	s	INDUCTOR 27uH
L708	1-408-414-00	s	INDUCTOR 27uH
L709	1-408-413-00	s	INDUCTOR 22uH
L710	1-408-414-00	s	INDUCTOR 27uH
L711	1-408-413-00	s	INDUCTOR 22uH
L712	1-408-413-00	s	INDUCTOR 22uH
L713	1-408-414-00	s	INDUCTOR 27uH
L802	1-410-482-31	s	INDUCTOR 100uH
L901	1-410-470-11	s	INDUCTOR 10uH
L902	1-410-470-11	s	INDUCTOR 10uH
L905	1-410-478-11	s	INDUCTOR 47uH
L906	1-408-414-00	s	INDUCTOR 27uH
L907	1-408-413-00	s	INDUCTOR 22uH
L951	1-410-473-11	s	INDUCTOR 18uH
L952	1-410-471-11	s	INDUCTOR 12uH
L953	1-410-482-31	s	INDUCTOR 100uH
L954	1-410-482-31	s	INDUCTOR 100uH
L955	1-408-424-00	s	INDUCTOR 180uH
Q1	8-729-904-07	s	TRANSISTOR FMG2
Q2	8-729-904-07	s	TRANSISTOR FMG2
Q3	8-729-904-07	s	TRANSISTOR FMG2
Q4	8-729-904-07	s	TRANSISTOR FMG2
Q10	8-729-907-39	s	TRANSISTOR IMD2T109
Q12	8-729-216-22	s	TRANSISTOR 2SA1162
Q13	8-729-202-38	s	TRANSISTOR 2SC3326N
Q14	8-729-202-38	s	TRANSISTOR 2SC3326N
Q15	8-729-904-07	s	TRANSISTOR FMG2
Q16	8-729-904-07	s	TRANSISTOR FMG2
Q17	8-729-901-01	s	TRANSISTOR DTC144EK
Q18	8-729-904-07	s	TRANSISTOR FMG2
Q19	8-729-904-07	s	TRANSISTOR FMG2
Q20	8-729-904-07	s	TRANSISTOR FMG2
Q21	8-729-202-38	s	TRANSISTOR 2SC3326N
Q22	8-729-230-49	s	TRANSISTOR 2SC2712-YG
Q25	8-729-216-22	s	TRANSISTOR 2SA1162
Q30	8-729-901-06	s	TRANSISTOR DTA144EK
Q31	8-729-904-07	s	TRANSISTOR FMG2
Q34	8-729-907-26	s	TRANSISTOR IMX1

(VO-47C BOARD(SVP-5600P))

Ref. No. or Q'ty	Part No.	SP	Description
Q38	8-729-900-89	s	TRANSISTOR DTC144ES
Q100	8-729-907-26	s	TRANSISTOR IMX1
Q101	8-729-216-22	s	TRANSISTOR 2SA1162
Q101	8-729-907-26	s	TRANSISTOR IMX1
Q102	8-729-230-49	s	TRANSISTOR 2SC2712-YG
Q103	8-729-907-46	s	TRANSISTOR IMZ1
Q104	8-729-216-22	s	TRANSISTOR 2SA1162
Q202	8-729-230-49	s	TRANSISTOR 2SC2712-YG
Q203	8-729-216-22	s	TRANSISTOR 2SA1162
Q301	8-729-230-49	s	TRANSISTOR 2SC2712-YG
Q302	8-729-230-49	s	TRANSISTOR 2SC2712-YG
Q303	8-729-907-26	s	TRANSISTOR IMX1
Q351	8-729-230-49	s	TRANSISTOR 2SC2712-YG
Q352	8-729-903-97	s	TRANSISTOR FMS1FE
Q353	8-729-903-10	s	TRANSISTOR FMW1
Q354	8-729-901-01	s	TRANSISTOR DTC144EK
Q355	8-729-907-46	s	TRANSISTOR IMZ1
Q356	8-729-216-22	s	TRANSISTOR 2SA1162
Q358	8-729-907-26	s	TRANSISTOR IMX1
Q359	8-729-907-26	s	TRANSISTOR IMX1
Q360	8-729-202-38	s	TRANSISTOR 2SC3326N
Q361	8-729-230-49	s	TRANSISTOR 2SC2712-YG
Q362	8-729-907-26	s	TRANSISTOR IMX1
Q363	8-729-230-49	s	TRANSISTOR 2SC2712-YG
Q500	8-729-230-49	s	TRANSISTOR 2SC2712-YG
Q501	8-729-907-26	s	TRANSISTOR IMX1
Q502	8-729-901-01	s	TRANSISTOR DTC144EK
Q503	8-729-230-49	s	TRANSISTOR 2SC2712-YG
Q504	8-729-907-26	s	TRANSISTOR IMX1
Q505	8-729-904-07	s	TRANSISTOR FMG2
Q508	8-729-202-38	s	TRANSISTOR 2SC3326N
Q509	8-729-907-26	s	TRANSISTOR IMX1
Q510	8-729-901-01	s	TRANSISTOR DTC144EK
Q511	8-729-109-44	s	TRANSISTOR 2SK94
Q512	8-729-109-44	s	TRANSISTOR 2SK94
Q513	8-729-202-38	s	TRANSISTOR 2SC3326N
Q514	8-729-903-10	s	TRANSISTOR FMW1
Q516	8-729-230-49	s	TRANSISTOR 2SC2712-YG
Q520	8-729-901-06	s	TRANSISTOR DTA144EK
Q521	8-729-907-26	s	TRANSISTOR IMX1
Q523	8-729-907-26	s	TRANSISTOR IMX1
Q525	8-729-907-26	s	TRANSISTOR IMX1
Q526	8-729-202-38	s	TRANSISTOR 2SC3326N
Q527	8-729-230-49	s	TRANSISTOR 2SC2712-YG
Q528	8-729-903-10	s	TRANSISTOR FMW1
Q530	8-729-230-49	s	TRANSISTOR 2SC2712-YG
Q531	8-729-230-49	s	TRANSISTOR 2SC2712-YG
Q532	8-729-216-22	s	TRANSISTOR 2SA1162
Q533	8-729-230-49	s	TRANSISTOR 2SC2712-YG
Q534	8-729-901-01	s	TRANSISTOR DTC144EK
Q535	8-729-901-01	s	TRANSISTOR DTC144EK
Q536	8-729-904-07	s	TRANSISTOR FMG2
Q700	8-729-230-49	s	TRANSISTOR 2SC2712-YG
Q702	8-729-230-49	s	TRANSISTOR 2SC2712-YG
Q801	8-729-907-26	s	TRANSISTOR IMX1
Q803	8-729-907-26	s	TRANSISTOR IMX1
Q804	8-729-230-49	s	TRANSISTOR 2SC2712-YG
Q806	8-729-907-26	s	TRANSISTOR IMX1
Q807	8-729-901-01	s	TRANSISTOR DTC144EK

(VO-47C BOARD(SVP-5600P))

Ref. No. or Q'ty	Part No.	SP	Description
Q810	8-729-904-07	s	TRANSISTOR FMG2
Q901	8-729-907-26	s	TRANSISTOR IMX1
Q903	8-729-230-49	s	TRANSISTOR 2SC2712-YG
Q904	8-729-230-49	s	TRANSISTOR 2SC2712-YG
Q905	8-729-230-49	s	TRANSISTOR 2SC2712-YG
Q906	8-729-216-22	s	TRANSISTOR 2SA1162
Q951	8-729-903-10	s	TRANSISTOR FMW1
Q953	8-729-907-26	s	TRANSISTOR IMX1
Q955	8-729-904-07	s	TRANSISTOR FMG2
Q959	8-729-904-07	s	TRANSISTOR FMG2
Q961	8-729-904-07	s	TRANSISTOR FMG2
R1	1-216-073-00	s	METAL, CHIP 10K 5% 1/10W
R1	1-216-075-00	s	METAL, CHIP 12K 5% 1/10W
R2	1-216-057-00	s	METAL, CHIP 2.2K 5% 1/10W
R2	1-216-073-00	s	METAL, CHIP 10K 5% 1/10W
R3	1-216-067-00	s	METAL, CHIP 5.6K 5% 1/10W
R3	1-216-073-00	s	METAL, CHIP 10K 5% 1/10W
R4	1-216-065-00	s	METAL, CHIP 4.7K 5% 1/10W
R4	1-216-073-00	s	METAL, CHIP 10K 5% 1/10W
R5	1-216-295-91	s	RES, CHIP 0
R7	1-216-295-91	s	RES, CHIP 0
R9	1-216-679-11	s	METAL, CHIP 15K 0.5% 1/10W
R10	1-216-119-00	s	METAL, CHIP 820K 5% 1/10W
R12	1-216-041-00	s	METAL, CHIP 470 5% 1/10W
R13	1-216-665-11	s	METAL, CHIP 3.9K 0.5% 1/10W
R14	1-216-089-00	s	METAL, CHIP 47K 5% 1/10W
R15	1-216-089-00	s	METAL, CHIP 47K 5% 1/10W
R16	1-216-634-11	s	METAL, CHIP 200 0.5% 1/10W
R17	1-216-637-11	s	METAL, CHIP 270 0.5% 1/10W
R18	1-216-089-00	s	METAL, CHIP 47K 5% 1/10W
R19	1-216-089-00	s	METAL, CHIP 47K 5% 1/10W
R20	1-216-674-11	s	METAL, CHIP 9.1K 0.5% 1/10W
R21	1-216-053-00	s	METAL, CHIP 1.5K 5% 1/10W
R22	1-216-665-11	s	METAL, CHIP 3.9K 0.5% 1/10W
R23	1-216-651-11	s	METAL, CHIP 1K 0.5% 1/10W
R24	1-216-049-00	s	METAL, CHIP 1K 5% 1/10W
R25	1-216-663-11	s	METAL, CHIP 3.3K 0.5% 1/10W
R26	1-216-081-00	s	METAL, CHIP 22K 5% 1/10W
R27	1-216-051-00	s	METAL, CHIP 1.2K 5% 1/10W
R28	1-216-119-00	s	METAL, CHIP 820K 5% 1/10W
R29	1-216-067-00	s	METAL, CHIP 5.6K 5% 1/10W
R30	1-216-651-11	s	METAL, CHIP 1K 0.5% 1/10W
R31	1-216-641-11	s	METAL, CHIP 390 0.5% 1/10W
R32	1-216-635-11	s	METAL, CHIP 220 0.5% 1/10W
R33	1-216-641-11	s	METAL, CHIP 390 0.5% 1/10W
R34	1-216-105-91	s	METAL, CHIP 220K 5% 1/10W
R42	1-215-429-00	s	METAL 2.2K 1% 1/6W
R44	1-216-125-00	s	METAL, CHIP 1.5M 5% 1/10W
R45	1-216-073-00	s	METAL, CHIP 10K 5% 1/10W
R46	1-216-073-00	s	METAL, CHIP 10K 5% 1/10W
R47	1-216-295-91	s	RES, CHIP 0
R48	1-216-047-00	s	METAL, CHIP 820 5% 1/10W
R49	1-216-083-00	s	METAL, CHIP 27K 5% 1/10W
R50	1-216-648-11	s	METAL, CHIP 750 0.5% 1/10W
R51	1-216-053-00	s	METAL, CHIP 1.5K 5% 1/10W
R53	1-216-089-00	s	METAL, CHIP 47K 5% 1/10W
R56	1-216-089-00	s	METAL, CHIP 47K 5% 1/10W
R70	1-216-089-00	s	METAL, CHIP 47K 5% 1/10W

(VO-47C BOARD(SVP-5600P))

Ref. No. or Q'ty	Part No.	SP	Description
R71	1-216-089-00	s	METAL, CHIP 47K 5% 1/10W
R72	1-208-774-11	s	METAL, CHIP 470 0.50% 1/10W
R73	1-208-774-11	s	METAL, CHIP 470 0.50% 1/10W
R74	1-216-663-11	s	METAL, CHIP 3.3K 0.5% 1/10W
R75	1-208-789-11	s	METAL, CHIP 2K 0.5% 1/10W
R100	1-216-077-00	s	METAL, CHIP 15K 5% 1/10W
R101	1-216-077-00	s	METAL, CHIP 15K 5% 1/10W
R102	1-216-049-00	s	METAL, CHIP 1K 5% 1/10W
R102	1-216-651-11	s	METAL, CHIP 1K 0.5% 1/10W
R103	1-216-057-00	s	METAL, CHIP 2.2K 5% 1/10W
R104	1-216-651-11	s	METAL, CHIP 1K 0.5% 1/10W
R104	1-216-665-11	s	METAL, CHIP 3.9K 0.5% 1/10W
R105	1-216-049-00	s	METAL, CHIP 1K 5% 1/10W
R105	1-216-639-11	s	METAL, CHIP 330 0.5% 1/10W
R106	1-216-077-00	s	METAL, CHIP 15K 5% 1/10W
R106	1-216-647-11	s	METAL, CHIP 680 0.5% 1/10W
R107	1-216-085-00	s	METAL, CHIP 33K 5% 1/10W
R107	1-216-651-11	s	METAL, CHIP 1K 0.5% 1/10W
R108	1-216-085-00	s	METAL, CHIP 33K 5% 1/10W
R108	1-208-774-11	s	METAL, CHIP 470 0.50% 1/10W
R109	1-216-025-00	s	METAL, CHIP 100 5% 1/10W
R109	1-208-774-11	s	METAL, CHIP 470 0.50% 1/10W
R110	1-216-049-00	s	METAL, CHIP 1K 5% 1/10W
R110	1-216-651-11	s	METAL, CHIP 1K 0.5% 1/10W
R111	1-216-049-00	s	METAL, CHIP 1K 5% 1/10W
R111	1-216-651-11	s	METAL, CHIP 1K 0.5% 1/10W
R112	1-216-053-00	s	METAL, CHIP 1.5K 5% 1/10W
R112	1-216-647-11	s	METAL, CHIP 680 0.5% 1/10W
R113	1-216-053-00	s	METAL, CHIP 1.5K 5% 1/10W
R113	1-208-774-11	s	METAL, CHIP 470 0.50% 1/10W
R114	1-216-295-91	s	RES, CHIP 0
R114	1-208-774-11	s	METAL, CHIP 470 0.50% 1/10W
R115	1-208-774-11	s	METAL, CHIP 470 0.50% 1/10W
R116	1-216-295-91	s	RES, CHIP 0
R118	1-216-049-00	s	METAL, CHIP 1K 5% 1/10W
R201	1-216-033-00	s	METAL, CHIP 220 5% 1/10W
R202	1-216-655-11	s	METAL, CHIP 1.5K 0.5% 1/10W
R203	1-216-664-11	s	METAL, CHIP 3.6K 0.5% 1/10W
R204	1-216-639-11	s	METAL, CHIP 330 0.5% 1/10W
R205	1-216-049-00	s	METAL, CHIP 1K 5% 1/10W
R206	1-216-113-00	s	METAL, CHIP 470K 5% 1/10W
R207	1-216-073-00	s	METAL, CHIP 10K 5% 1/10W
R208	1-216-295-91	s	RES, CHIP 0
R209	1-216-295-91	s	RES, CHIP 0
R210	1-216-655-11	s	METAL, CHIP 1.5K 0.5% 1/10W
R211	1-216-663-11	s	METAL, CHIP 3.3K 0.5% 1/10W
R212	1-216-083-00	s	METAL, CHIP 27K 5% 1/10W
R213	1-216-075-00	s	METAL, CHIP 12K 5% 1/10W
R215	1-216-055-00	s	METAL, CHIP 1.8K 5% 1/10W
R216	1-216-651-11	s	METAL, CHIP 1K 0.5% 1/10W
R217	1-216-057-00	s	METAL, CHIP 2.2K 5% 1/10W
R218	1-216-639-11	s	METAL, CHIP 330 0.5% 1/10W
R219	1-216-648-11	s	METAL, CHIP 750 0.5% 1/10W
R220	1-216-057-00	s	METAL, CHIP 2.2K 5% 1/10W
R301	1-216-121-00	s	METAL, CHIP 1M 5% 1/10W
R302	1-216-049-00	s	METAL, CHIP 1K 5% 1/10W
R303	1-216-095-00	s	METAL, CHIP 82K 5% 1/10W
R304	1-216-059-00	s	METAL, CHIP 2.7K 5% 1/10W
R305	1-216-660-11	s	METAL, CHIP 2.4K 0.5% 1/10W

(VO-47C BOARD(SVP-5600P))

Ref. No. or Q'ty	Part No.	SP	Description
R306	1-216-041-00	s	METAL, CHIP 470 5% 1/10W
R307	1-216-049-00	s	METAL, CHIP 1K 5% 1/10W
R308	1-216-097-00	s	METAL, CHIP 100K 5% 1/10W
R309	1-216-049-00	s	METAL, CHIP 1K 5% 1/10W
R311	1-216-049-00	s	METAL, CHIP 1K 5% 1/10W
R344	1-208-751-11	s	METAL, CHIP 51 0.5% 1/10W
R345	1-216-295-91	s	RES, CHIP 0
R346	1-216-295-91	s	RES, CHIP 0
R351	1-216-641-11	s	METAL, CHIP 390 0.5% 1/10W
R353	1-216-641-11	s	METAL, CHIP 390 0.5% 1/10W
R354	1-216-675-11	s	METAL, CHIP 10K 0.5% 1/10W
R355	1-216-641-11	s	METAL, CHIP 390 0.5% 1/10W
R356	1-216-081-00	s	METAL, CHIP 22K 5% 1/10W
R357	1-216-077-00	s	METAL, CHIP 15K 5% 1/10W
R358	1-216-651-11	s	METAL, CHIP 1K 0.5% 1/10W
R359	1-216-650-11	s	METAL, CHIP 910 0.5% 1/10W
R360	1-216-646-11	s	METAL, CHIP 620 0.5% 1/10W
R361	1-216-651-11	s	METAL, CHIP 1K 0.5% 1/10W
R362	1-216-650-11	s	METAL, CHIP 910 0.5% 1/10W
R363	1-216-646-11	s	METAL, CHIP 620 0.5% 1/10W
R364	1-216-049-00	s	METAL, CHIP 1K 5% 1/10W
R365	1-218-770-11	s	METAL, CHIP 560K 0.50% 1/10W
R366	1-216-655-11	s	METAL, CHIP 1.5K 0.5% 1/10W
R367	1-216-073-00	s	METAL, CHIP 10K 5% 1/10W
R368	1-216-073-00	s	METAL, CHIP 10K 5% 1/10W
R369	1-216-647-11	s	METAL, CHIP 680 0.5% 1/10W
R370	1-216-049-00	s	METAL, CHIP 1K 5% 1/10W
R371	1-216-057-00	s	METAL, CHIP 2.2K 5% 1/10W
R372	1-216-037-00	s	METAL, CHIP 330 5% 1/10W
R374	1-216-659-11	s	METAL, CHIP 2.2K 0.5% 1/10W
R375	1-216-073-00	s	METAL, CHIP 10K 5% 1/10W
R376	1-216-678-11	s	METAL, CHIP 13K 0.5% 1/10W
R378	1-216-049-00	s	METAL, CHIP 1K 5% 1/10W
R379	1-216-633-11	s	METAL, CHIP 180 0.5% 1/10W
R380	1-216-649-11	s	METAL, CHIP 820 0.5% 1/10W
R381	1-216-049-00	s	METAL, CHIP 1K 5% 1/10W
R382	1-216-057-00	s	METAL, CHIP 2.2K 5% 1/10W
R383	1-216-089-00	s	METAL, CHIP 47K 5% 1/10W
R384	1-208-774-11	s	METAL, CHIP 470 0.50% 1/10W
R385	1-216-647-11	s	METAL, CHIP 680 0.5% 1/10W
R386	1-208-774-11	s	METAL, CHIP 470 0.50% 1/10W
R387	1-216-051-00	s	METAL, CHIP 1.2K 5% 1/10W
R388	1-216-033-00	s	METAL, CHIP 220 5% 1/10W
R389	1-216-041-00	s	METAL, CHIP 470 5% 1/10W
R390	1-216-049-00	s	METAL, CHIP 1K 5% 1/10W
R391	1-216-081-00	s	METAL, CHIP 22K 5% 1/10W
R392	1-216-073-00	s	METAL, CHIP 10K 5% 1/10W
R393	1-216-077-00	s	METAL, CHIP 15K 5% 1/10W
R394	1-216-057-00	s	METAL, CHIP 2.2K 5% 1/10W
R395	1-216-073-00	s	METAL, CHIP 10K 5% 1/10W
R500	1-216-013-00	s	METAL, CHIP 33 5% 1/10W
R501	1-216-049-00	s	METAL, CHIP 1K 5% 1/10W
R504	1-216-089-00	s	METAL, CHIP 47K 5% 1/10W
R505	1-216-041-00	s	METAL, CHIP 470 5% 1/10W
R506	1-216-639-11	s	METAL, CHIP 330 0.5% 1/10W
R507	1-216-639-11	s	METAL, CHIP 330 0.5% 1/10W
R508	1-216-073-00	s	METAL, CHIP 10K 5% 1/10W
R509	1-216-659-11	s	METAL, CHIP 2.2K 0.5% 1/10W
R510	1-216-085-00	s	METAL, CHIP 33K 5% 1/10W

(VO-47C BOARD(SVP-5600P))

Ref. No. or Q'ty	Part No.	SP	Description
R511	1-216-049-00	s	METAL, CHIP 1K 5% 1/10W
R512	1-216-077-00	s	METAL, CHIP 15K 5% 1/10W
R513	1-216-651-11	s	METAL, CHIP 1K 0.5% 1/10W
R514	1-216-049-00	s	METAL, CHIP 1K 5% 1/10W
R515	1-208-789-11	s	METAL, CHIP 2K 0.5% 1/10W
R516	1-216-295-91	s	RES, CHIP 0
R517	1-216-651-11	s	METAL, CHIP 1K 0.5% 1/10W
R518	1-216-655-11	s	METAL, CHIP 1.5K 0.5% 1/10W
R519	1-216-632-11	s	METAL, CHIP 160 0.5% 1/10W
R520	1-216-295-91	s	RES, CHIP 0
R521	1-208-775-11	s	METAL, CHIP 510 0.50% 1/10W
R522	1-216-657-11	s	METAL, CHIP 1.8K 0.5% 1/10W
R523	1-208-774-11	s	METAL, CHIP 470 0.50% 1/10W
R524	1-216-049-00	s	METAL, CHIP 1K 5% 1/10W
R525	1-216-651-11	s	METAL, CHIP 1K 0.5% 1/10W
R526	1-216-647-11	s	METAL, CHIP 680 0.5% 1/10W
R527	1-216-641-11	s	METAL, CHIP 390 0.5% 1/10W
R528	1-216-699-11	s	METAL, CHIP 100K 0.5% 1/10W
R529	1-216-651-11	s	METAL, CHIP 1K 0.5% 1/10W
R530	1-216-631-11	s	METAL, CHIP 150 0.5% 1/10W
R531	1-216-635-11	s	METAL, CHIP 220 0.5% 1/10W
R533	1-216-081-00	s	METAL, CHIP 22K 5% 1/10W
R534	1-216-067-00	s	METAL, CHIP 5.6K 5% 1/10W
R535	1-216-667-11	s	METAL, CHIP 4.7K 0.5% 1/10W
R536	1-216-081-00	s	METAL, CHIP 22K 5% 1/10W
R537	1-216-663-11	s	METAL, CHIP 3.3K 0.5% 1/10W
R538	1-216-675-11	s	METAL, CHIP 10K 0.5% 1/10W
R539	1-216-121-00	s	METAL, CHIP 1M 5% 1/10W
R540	1-216-073-00	s	METAL, CHIP 10K 5% 1/10W
R541	1-216-073-00	s	METAL, CHIP 10K 5% 1/10W
R542	1-216-073-00	s	METAL, CHIP 10K 5% 1/10W
R543	1-216-073-00	s	METAL, CHIP 10K 5% 1/10W
R544	1-216-049-00	s	METAL, CHIP 1K 5% 1/10W
R545	1-216-657-11	s	METAL, CHIP 1.8K 0.5% 1/10W
R546	1-216-659-11	s	METAL, CHIP 2.2K 0.5% 1/10W
R549	1-216-295-91	s	RES, CHIP 0
R551	1-216-651-11	s	METAL, CHIP 1K 0.5% 1/10W
R554	1-216-295-91	s	RES, CHIP 0
R556	1-208-774-11	s	METAL, CHIP 470 0.50% 1/10W
R557	1-216-073-00	s	METAL, CHIP 10K 5% 1/10W
R558	1-216-041-00	s	METAL, CHIP 470 5% 1/10W
R559	1-216-625-11	s	METAL, CHIP 82 0.5% 1/10W
R560	1-216-033-00	s	METAL, CHIP 220 5% 1/10W
R561	1-216-049-00	s	METAL, CHIP 1K 5% 1/10W
R562	1-216-073-00	s	METAL, CHIP 10K 5% 1/10W
R563	1-216-051-00	s	METAL, CHIP 1.2K 5% 1/10W
R564	1-216-073-00	s	METAL, CHIP 10K 5% 1/10W
R565	1-216-665-11	s	METAL, CHIP 3.9K 0.5% 1/10W
R566	1-216-049-00	s	METAL, CHIP 1K 5% 1/10W
R567	1-216-067-00	s	METAL, CHIP 5.6K 5% 1/10W
R568	1-216-035-00	s	METAL, CHIP 270 5% 1/10W
R569	1-216-049-00	s	METAL, CHIP 1K 5% 1/10W
R570	1-216-049-00	s	METAL, CHIP 1K 5% 1/10W
R571	1-216-081-00	s	METAL, CHIP 22K 5% 1/10W
R572	1-216-081-00	s	METAL, CHIP 22K 5% 1/10W
R573	1-216-651-11	s	METAL, CHIP 1K 0.5% 1/10W
R574	1-216-049-00	s	METAL, CHIP 1K 5% 1/10W
R575	1-216-639-11	s	METAL, CHIP 330 0.5% 1/10W
R576	1-216-295-91	s	RES, CHIP 0

(VO-47C BOARD(SVP-5600P))

Ref. No. or Q'ty	Part No.	SP	Description
R577	1-216-049-00	s	METAL, CHIP 1K 5% 1/10W
R578	1-216-081-00	s	METAL, CHIP 22K 5% 1/10W
R579	1-216-051-00	s	METAL, CHIP 1.2K 5% 1/10W
R580	1-216-049-00	s	METAL, CHIP 1K 5% 1/10W
R581	1-216-073-00	s	METAL, CHIP 10K 5% 1/10W
R582	1-216-655-11	s	METAL, CHIP 1.5K 0.5% 1/10W
R583	1-216-057-00	s	METAL, CHIP 2.2K 5% 1/10W
R584	1-216-073-00	s	METAL, CHIP 10K 5% 1/10W
R585	1-216-057-00	s	METAL, CHIP 2.2K 5% 1/10W
R586	1-216-049-00	s	METAL, CHIP 1K 5% 1/10W
R587	1-208-784-11	s	METAL, CHIP 1.2K 0.50% 1/10W
R588	1-216-295-91	s	RES, CHIP 0
R590	1-216-295-91	s	RES, CHIP 0
R591	1-216-295-91	s	RES, CHIP 0
R593	1-216-295-91	s	RES, CHIP 0
R594	1-216-667-11	s	METAL, CHIP 4.7K 0.5% 1/10W
R595	1-216-667-11	s	METAL, CHIP 4.7K 0.5% 1/10W
R596	1-216-049-00	s	METAL, CHIP 1K 5% 1/10W
R597	1-216-073-00	s	METAL, CHIP 10K 5% 1/10W
R598	1-216-073-00	s	METAL, CHIP 10K 5% 1/10W
R599	1-216-691-11	s	METAL, CHIP 47K 0.5% 1/10W
R600	1-216-063-00	s	METAL, CHIP 3.9K 5% 1/10W
R601	1-216-683-11	s	METAL, CHIP 22K 0.5% 1/10W
R602	1-216-651-11	s	METAL, CHIP 1K 0.5% 1/10W
R603	1-216-651-11	s	METAL, CHIP 1K 0.5% 1/10W
R604	1-216-295-91	s	RES, CHIP 0
R605	1-216-635-11	s	METAL, CHIP 220 0.5% 1/10W
R606	1-216-295-91	s	RES, CHIP 0
R608	1-216-057-00	s	METAL, CHIP 2.2K 5% 1/10W
R610	1-216-065-00	s	METAL, CHIP 4.7K 5% 1/10W
R611	1-216-049-00	s	METAL, CHIP 1K 5% 1/10W
R614	1-216-295-91	s	RES, CHIP 0
R615	1-216-073-00	s	METAL, CHIP 10K 5% 1/10W
R616	1-216-295-91	s	RES, CHIP 0
R617	1-216-295-91	s	RES, CHIP 0
R619	1-216-041-00	s	METAL, CHIP 470 5% 1/10W
R620	1-216-651-11	s	METAL, CHIP 1K 0.5% 1/10W
R621	1-216-663-11	s	METAL, CHIP 3.3K 0.5% 1/10W
R622	1-216-089-00	s	METAL, CHIP 47K 5% 1/10W
R623	1-216-655-11	s	METAL, CHIP 1.5K 0.5% 1/10W
R624	1-216-667-11	s	METAL, CHIP 4.7K 0.5% 1/10W
R625	1-216-077-00	s	METAL, CHIP 15K 5% 1/10W
R626	1-216-650-11	s	METAL, CHIP 910 0.5% 1/10W
R629	1-216-091-00	s	METAL, CHIP 56K 5% 1/10W
R630	1-216-073-00	s	METAL, CHIP 10K 5% 1/10W
R631	1-216-073-00	s	METAL, CHIP 10K 5% 1/10W
R633	1-216-671-11	s	METAL, CHIP 6.8K 0.5% 1/10W
R634	1-216-687-11	s	METAL, CHIP 33K 0.5% 1/10W
R635	1-216-652-11	s	METAL, CHIP 1.1K 0.5% 1/10W
R636	1-216-641-11	s	METAL, CHIP 390 0.5% 1/10W
R638	1-216-295-91	s	RES, CHIP 0
R639	1-216-295-91	s	RES, CHIP 0
R642	1-208-789-11	s	METAL, CHIP 2K 0.5% 1/10W
R643	1-216-647-11	s	METAL, CHIP 680 0.5% 1/10W
R648	1-216-295-91	s	RES, CHIP 0
R650	1-216-295-91	s	RES, CHIP 0
R700	1-216-027-00	s	METAL, CHIP 120 5% 1/10W
R701	1-216-095-00	s	METAL, CHIP 82K 5% 1/10W
R702	1-216-295-91	s	RES, CHIP 0

(VO-47C BOARD(SVP-5600P))

Ref. No. or Q'ty	Part No.	SP	Description
R703	1-216-049-00	s	METAL, CHIP 1K 5% 1/10W
R704	1-216-121-00	s	METAL, CHIP 1M 5% 1/10W
R706	1-216-295-91	s	RES, CHIP 0
R708	1-208-774-11	s	METAL, CHIP 470 0.50% 1/10W
R709	1-216-657-11	s	METAL, CHIP 1.8K 0.5% 1/10W
R711	1-216-652-11	s	METAL, CHIP 1.1K 0.5% 1/10W
R713	1-216-057-00	s	METAL, CHIP 2.2K 5% 1/10W
R714	1-216-652-11	s	METAL, CHIP 1.1K 0.5% 1/10W
R715	1-216-623-11	s	METAL, CHIP 68 0.5% 1/10W
R716	1-216-648-11	s	METAL, CHIP 750 0.5% 1/10W
R717	1-216-651-11	s	METAL, CHIP 1K 0.5% 1/10W
R720	1-216-651-11	s	METAL, CHIP 1K 0.5% 1/10W
R801	1-216-057-00	s	METAL, CHIP 2.2K 5% 1/10W
R802	1-216-057-00	s	METAL, CHIP 2.2K 5% 1/10W
R803	1-216-629-11	s	METAL, CHIP 120 0.5% 1/10W
R804	1-208-774-11	s	METAL, CHIP 470 0.50% 1/10W
R805	1-216-295-91	s	RES, CHIP 0
R806	1-216-649-11	s	METAL, CHIP 820 0.5% 1/10W
R807	1-216-081-00	s	METAL, CHIP 22K 5% 1/10W
R808	1-216-081-00	s	METAL, CHIP 22K 5% 1/10W
R809	1-216-651-11	s	METAL, CHIP 1K 0.5% 1/10W
R810	1-216-649-11	s	METAL, CHIP 820 0.5% 1/10W
R811	1-208-774-11	s	METAL, CHIP 470 0.50% 1/10W
R812	1-216-049-00	s	METAL, CHIP 1K 5% 1/10W
R813	1-216-049-00	s	METAL, CHIP 1K 5% 1/10W
R814	1-216-049-00	s	METAL, CHIP 1K 5% 1/10W
R815	1-216-651-11	s	METAL, CHIP 1K 0.5% 1/10W
R816	1-216-651-11	s	METAL, CHIP 1K 0.5% 1/10W
R818	1-216-073-00	s	METAL, CHIP 10K 5% 1/10W
R819	1-216-057-00	s	METAL, CHIP 2.2K 5% 1/10W
R820	1-216-049-00	s	METAL, CHIP 1K 5% 1/10W
R821	1-216-073-00	s	METAL, CHIP 10K 5% 1/10W
R822	1-216-073-00	s	METAL, CHIP 10K 5% 1/10W
R823	1-216-073-00	s	METAL, CHIP 10K 5% 1/10W
R824	1-216-067-00	s	METAL, CHIP 5.6K 5% 1/10W
R825	1-216-081-00	s	METAL, CHIP 22K 5% 1/10W
R826	1-216-105-91	s	METAL, CHIP 220K 5% 1/10W
R827	1-218-765-11	s	METAL, CHIP 360K 0.50% 1/10W
R828	1-216-081-00	s	METAL, CHIP 22K 5% 1/10W
R829	1-216-073-00	s	METAL, CHIP 10K 5% 1/10W
R830	1-216-073-00	s	METAL, CHIP 10K 5% 1/10W
R831	1-216-073-00	s	METAL, CHIP 10K 5% 1/10W
R832	1-216-073-00	s	METAL, CHIP 10K 5% 1/10W
R833	1-216-115-00	s	METAL, CHIP 560K 5% 1/10W
R834	1-216-049-00	s	METAL, CHIP 1K 5% 1/10W
R835	1-216-113-00	s	METAL, CHIP 470K 5% 1/10W
R836	1-216-651-11	s	METAL, CHIP 1K 0.5% 1/10W
R842	1-216-689-11	s	METAL, CHIP 39K 0.5% 1/10W
R843	1-208-812-11	s	METAL, CHIP 18K 0.5% 1/10W
R844	1-216-689-11	s	METAL, CHIP 39K 0.5% 1/10W
R845	1-216-073-00	s	METAL, CHIP 10K 5% 1/10W
R846	1-218-772-11	s	METAL 680K 0.5% 1/10W
R847	1-216-097-00	s	METAL, CHIP 100K 5% 1/10W
R848	1-216-105-91	s	METAL, CHIP 220K 5% 1/10W
R849	1-216-057-00	s	METAL, CHIP 2.2K 5% 1/10W
R850	1-216-625-11	s	METAL, CHIP 82 0.5% 1/10W
R851	1-216-065-00	s	METAL, CHIP 4.7K 5% 1/10W
R852	1-216-097-00	s	METAL, CHIP 100K 5% 1/10W
R853	1-216-121-00	s	METAL, CHIP 1M 5% 1/10W

(VO-47C BOARD(SVP-5600P))

Ref. No. or Q'ty	Part No.	SP	Description
R854	1-216-295-91	s	RES, CHIP 0
R855	1-216-295-91	s	RES, CHIP 0
R901	1-208-767-11	s	METAL, CHIP 240 0.5% 1/10W
R902	1-216-639-11	s	METAL, CHIP 330 0.5% 1/10W
R903	1-216-667-11	s	METAL, CHIP 4.7K 0.5% 1/10W
R904	1-216-677-11	s	METAL, CHIP 12K 0.5% 1/10W
R905	1-216-053-00	s	METAL, CHIP 1.5K 5% 1/10W
R906	1-216-073-00	s	METAL, CHIP 10K 5% 1/10W
R907	1-216-049-00	s	METAL, CHIP 1K 5% 1/10W
R908	1-216-049-00	s	METAL, CHIP 1K 5% 1/10W
R909	1-216-049-00	s	METAL, CHIP 1K 5% 1/10W
R910	1-216-049-00	s	METAL, CHIP 1K 5% 1/10W
R911	1-216-651-11	s	METAL, CHIP 1K 0.5% 1/10W
R912	1-216-651-11	s	METAL, CHIP 1K 0.5% 1/10W
R913	1-216-049-00	s	METAL, CHIP 1K 5% 1/10W
R914	1-216-651-11	s	METAL, CHIP 1K 0.5% 1/10W
R915	1-216-629-11	s	METAL, CHIP 120 0.5% 1/10W
R916	1-216-049-00	s	METAL, CHIP 1K 5% 1/10W
R917	1-216-649-11	s	METAL, CHIP 820 0.5% 1/10W
R918	1-216-073-00	s	METAL, CHIP 10K 5% 1/10W
R919	1-216-659-11	s	METAL, CHIP 2.2K 0.5% 1/10W
R920	1-216-659-11	s	METAL, CHIP 2.2K 0.5% 1/10W
R921	1-216-651-11	s	METAL, CHIP 1K 0.5% 1/10W
R922	1-216-651-11	s	METAL, CHIP 1K 0.5% 1/10W
R923	1-216-647-11	s	METAL, CHIP 680 0.5% 1/10W
R924	1-216-623-11	s	METAL, CHIP 68 0.5% 1/10W
R925	1-216-121-00	s	METAL, CHIP 1M 5% 1/10W
R926	1-216-027-00	s	METAL, CHIP 120 5% 1/10W
R927	1-216-095-00	s	METAL, CHIP 82K 5% 1/10W
R928	1-216-295-91	s	RES, CHIP 0
R930	1-216-049-00	s	METAL, CHIP 1K 5% 1/10W
R932	1-216-651-11	s	METAL, CHIP 1K 0.5% 1/10W
R933	1-216-645-11	s	METAL, CHIP 560 0.5% 1/10W
R934	1-216-646-11	s	METAL, CHIP 620 0.5% 1/10W
R935	1-208-784-11	s	METAL, CHIP 1.2K 0.50% 1/10W
R936	1-216-295-91	s	RES, CHIP 0
R937	1-216-641-11	s	METAL, CHIP 390 0.5% 1/10W
R938	1-216-641-11	s	METAL, CHIP 390 0.5% 1/10W
R939	1-216-659-11	s	METAL, CHIP 2.2K 0.5% 1/10W
R940	1-216-679-11	s	METAL, CHIP 15K 0.5% 1/10W
R941	1-216-667-11	s	METAL, CHIP 4.7K 0.5% 1/10W
R942	1-216-651-11	s	METAL, CHIP 1K 0.5% 1/10W
R943	1-216-667-11	s	METAL, CHIP 4.7K 0.5% 1/10W
R944	1-216-666-11	s	METAL, CHIP 4.3K 0.5% 1/10W
R951	1-216-647-11	s	METAL, CHIP 680 0.5% 1/10W
R952	1-216-663-11	s	METAL, CHIP 3.3K 0.5% 1/10W
R953	1-216-065-00	s	METAL, CHIP 4.7K 5% 1/10W
R954	1-216-694-11	s	METAL, CHIP 62K 0.5% 1/10W
R955	1-216-065-00	s	METAL, CHIP 4.7K 5% 1/10W
R956	1-216-065-00	s	METAL, CHIP 4.7K 5% 1/10W
R957	1-216-099-00	s	METAL, CHIP 120K 5% 1/10W
R958	1-216-696-11	s	METAL, CHIP 75K 0.5% 1/10W
R961	1-216-065-00	s	METAL, CHIP 4.7K 5% 1/10W
R962	1-216-671-11	s	METAL, CHIP 6.8K 0.5% 1/10W
R963	1-216-671-11	s	METAL, CHIP 6.8K 0.5% 1/10W
R966	1-216-651-11	s	METAL, CHIP 1K 0.5% 1/10W
R967	1-208-784-11	s	METAL, CHIP 1.2K 0.50% 1/10W
R968	1-216-081-00	s	METAL, CHIP 22K 5% 1/10W
R969	1-216-069-00	s	METAL, CHIP 6.8K 5% 1/10W

(VO-47C BOARD(SVP-5600P))

Ref. No. or Q'ty	Part No.	SP	Description
R970	1-216-051-00	s	METAL, CHIP 1.2K 5% 1/10W
R971	1-216-037-00	s	METAL, CHIP 330 5% 1/10W
R972	1-216-057-00	s	METAL, CHIP 2.2K 5% 1/10W
R973	1-216-650-11	s	METAL, CHIP 910 0.5% 1/10W
R974	1-216-025-00	s	METAL, CHIP 100 5% 1/10W
R975	1-216-651-11	s	METAL, CHIP 1K 0.5% 1/10W
R976	1-216-675-11	s	METAL, CHIP 10K 0.5% 1/10W
R977	1-216-675-11	s	METAL, CHIP 10K 0.5% 1/10W
R978	1-216-667-11	s	METAL, CHIP 4.7K 0.5% 1/10W
R979	1-216-295-91	s	RES, CHIP 0
R980	1-216-295-91	s	RES, CHIP 0
R986	1-216-073-00	s	METAL, CHIP 10K 5% 1/10W
R987	1-216-081-00	s	METAL, CHIP 22K 5% 1/10W
R988	1-216-081-00	s	METAL, CHIP 22K 5% 1/10W
R989	1-216-077-00	s	METAL, CHIP 15K 5% 1/10W
R990	1-216-073-00	s	METAL, CHIP 10K 5% 1/10W
R991	1-216-295-91	s	RES, CHIP 0
R993	1-216-692-11	s	METAL, CHIP 51K 0.5% 1/10W
R995	1-216-687-11	s	METAL, CHIP 33K 0.5% 1/10W
R996	1-216-067-00	s	METAL, CHIP 5.6K 5% 1/10W
R998	1-216-065-00	s	METAL, CHIP 4.7K 5% 1/10W
RV11	1-241-763-11	s	RES, ADJ METAL 4.7k
RV12	1-241-630-11	s	RES, ADJ CARBON 10K
RV101	1-228-455-00	s	RES, ADJ METAL 500
RV301	1-241-759-21	s	RES, ADJ METAL 220
RV351	1-230-930-11	s	RES, ADJ CARBON 220
RV503	1-241-630-11	s	RES, ADJ CARBON 10K
RV505	1-241-765-11	s	RES, ADJ CARBON 22K
RV700	1-241-761-11	s	RES, ADJ METAL 1k
RV701	1-241-760-11	s	RES, ADJ CARBON 470
RV901	1-241-761-11	s	RES, ADJ METAL 1k
RV902	1-241-759-21	s	RES, ADJ METAL 220
RV951	1-241-763-11	s	RES, ADJ METAL 4.7k
RV952	1-241-763-11	s	RES, ADJ METAL 4.7k
RV953	1-241-783-11	s	RES, ADJ METAL 2.2k
TH901	1-800-198-11	s	THERMISTOR, S-1K
TH902	1-809-308-11	s	THERMISTOR, CHIP
TH903	1-800-198-11	s	THERMISTOR, S-1K
X100	1-567-860-11	s	CRYSTAL, 4.433618MHz

DUS-808 BOARD

Ref. No. or Q'ty	Part No.	SP	Description
DUS-808 board is included VO-47A/VO-47C board.			
1pc	A-8265-894-A	o	MOUNTED CIRCUIT BOARD, DUS-809
C100	1-124-779-00	s	ELECT 10uF 20% 16V
C101	1-163-239-11	s	CERAMIC, CHIP 33PF 5% 50V
C102	1-164-232-11	s	CERAMIC, CHIP 0.01uF 10% 100V
C103	1-163-113-00	s	CERAMIC, CHIP 68PF 5% 50V
C104	1-163-251-11	s	CERAMIC, CHIP 100PF 5% 50V
C105	1-163-121-00	s	CERAMIC, CHIP 150PF 5% 50V
C106	1-164-232-11	s	CERAMIC, CHIP 0.01uF 10% 100V
C107	1-164-232-11	s	CERAMIC, CHIP 0.01uF 10% 100V
C108	1-164-232-11	s	CERAMIC, CHIP 0.01uF 10% 100V
C110	1-163-243-11	s	CERAMIC, CHIP 47PF 5% 50V
C111	1-164-232-11	s	CERAMIC, CHIP 0.01uF 10% 100V
C112	1-124-779-00	s	ELECT 10uF 20% 16V
CF100	1-231-280-00	s	FILTER, CERAMIC 4.43MHz¥
CN501	1-566-085-11	s	CONNECTOR, 20P, MALE
CN502	1-566-085-11	s	CONNECTOR, 20P, MALE
CV100	1-141-424-11	s	CAP, TRIMMER, CHIP 30pF
L100	1-408-785-21	s	INDUCTOR, CHIP 47uH
L101	1-408-785-21	s	INDUCTOR, CHIP 47uH
Q100	8-729-907-26	s	TRANSISTOR IMX1
Q101	8-729-907-26	s	TRANSISTOR IMX1
Q103	8-729-907-46	s	TRANSISTOR IMZ1
R100	1-216-077-00	s	METAL, CHIP 15K 5% 1/10W
R101	1-216-077-00	s	METAL, CHIP 15K 5% 1/10W
R102	1-216-049-00	s	METAL, CHIP 1K 5% 1/10W
R103	1-216-057-00	s	METAL, CHIP 2.2K 5% 1/10W
R104	1-216-651-11	s	METAL, CHIP 1K 0.5% 1/10W
R105	1-216-639-11	s	METAL, CHIP 330 0.5% 1/10W
R106	1-216-647-11	s	METAL, CHIP 680 0.5% 1/10W
R107	1-216-085-00	s	METAL, CHIP 33K 5% 1/10W
R108	1-216-085-00	s	METAL, CHIP 33K 5% 1/10W
R109	1-216-025-00	s	METAL, CHIP 100 5% 1/10W
R110	1-216-049-00	s	METAL, CHIP 1K 5% 1/10W
R111	1-216-049-00	s	METAL, CHIP 1K 5% 1/10W
R112	1-216-647-11	s	METAL, CHIP 680 0.5% 1/10W
R113	1-208-774-11	s	METAL, CHIP 470 0.50% 1/10W
R114	1-208-774-11	s	METAL, CHIP 470 0.50% 1/10W
R115	1-208-774-11	s	METAL, CHIP 470 0.50% 1/10W
R116	1-216-648-11	s	METAL, CHIP 750 0.5% 1/10W
R118	1-216-049-00	s	METAL, CHIP 1K 5% 1/10W
X100	1-567-860-11	s	CRYSTAL, 4.433618MHz

DUS-809 BOARD

Ref. No. or Q'ty	Part No.	SP	Description
DUS-809 board is included VO-47A/VO-47C board.			
1pc	A-8265-895-A	o	MOUNTED CIRCUIT BOARD, DUS-809
C1	1-164-346-11	s	CERAMIC 1uF 16V
C2	1-164-489-11	s	CERAMIC, CHIP 0.22uF 10% 16V
C4	1-164-344-11	s	CERAMIC, CHIP 0.068uF 10% 25V
C5	1-164-489-11	s	CERAMIC, CHIP 0.22uF 10% 16V
C7	1-164-346-11	s	CERAMIC 1uF 16V
C8	1-128-065-11	s	ELECT, CHIP 68uF 20% 10V
C9	1-128-065-11	s	ELECT, CHIP 68uF 20% 10V
CN504	1-566-085-11	s	CONNECTOR, 20P, MALE
IC1	8-759-925-76	s	IC SN74HC08ANS
Q1	8-729-904-07	s	TRANSISTOR FMG2
Q2	8-729-904-07	s	TRANSISTOR FMG2
Q3	8-729-904-07	s	TRANSISTOR FMG2
Q4	8-729-904-07	s	TRANSISTOR FMG2
R1	1-216-073-00	s	METAL, CHIP 10K 5% 1/10W
R2	1-216-073-00	s	METAL, CHIP 10K 5% 1/10W
R3	1-216-073-00	s	METAL, CHIP 10K 5% 1/10W
R4	1-216-073-00	s	METAL, CHIP 10K 5% 1/10W

FRAME

Ref. No. or Q'ty	Part No.	SP	Description
1pc	⚠ 1-413-998-11	s	REGULATOR, SWITCHING
1pc	1-590-430-11	s	WIRE, FLEXIBLE CARD 20P
2pcs	1-543-798-11	s	BEAD, FERRITE(DETACHABLE)
H1001	X-3166-709-1	o	HEAD ASSY, ACE (for SVO-5800P)
	X-3165-588-1	o	HEAD ASSY, ACE (for SVP-5600P)
H1002	8-848-578-12	s	DRUM ASSY DZH-41A
	8-848-579-02	s	UPPER DRUM ASSY, DZR-41-R
H1003	1-543-695-11	s	HEAD, FILL-ERASE
M904	X-3727-784-1	s	MOTOR ASSY "CASSETTE COMPARTMENT"
M1002	8-835-480-02	s	MOTOR, DC SCV-0401A "CAPSTAN"
M1003	8-835-501-01	s	MOTOR, DC SRV-0202A "T-REEL"
M1004	8-835-501-01	s	MOTOR, DC SRV-0202A "S-REEL"
M1005	X-3165-593-3	o	MOTOR ASSY, CAM "LOADING"
PM1001	1-454-531-11	s	SOLENOID "BRAKE"
PM1002	1-454-434-31	s	SOLENOID "PINCH"
PM1003	1-454-334-71	s	SOLENOID "T-BRAKE"
S1001	⚠ 1-570-117-41	s	SWITCH, ROCKER (AC POWER)

HARNESSES

Ref. No. or Q'ty	Part No.	SP	Description
HARNESS (A-ERASE):CN617/AH-40 to CN3/MB board			
1pc	1-953-895-11	o	HARNESS (A-ERASE)
HARNESS (A-HEAD):CN616/AH-40,28 to CN1,CN2/MB board			
CN616R	1-569-197-11	o	HOUSING, 4P
4pcs	1-569-193-11	o	CONTACT, FEMALE, AWG24-30
CN1Y	1-569-196-41	o	HOUSING, 3P
3pcs	1-569-193-11	o	CONTACT, FEMALE, AWG24-30
CN2R	1-569-196-31	o	HOUSING, 3P
3pcs	1-569-193-11	o	CONTACT, FEMALE, AWG24-30
HARNESS (CAPSTAN):CN114/MB board to CN603/CAPSTAN MOTOR			
1pc	1-953-894-11	o	HARNESS (CAPSTAN)
HARNESS (CASSECON):CN111/CN board to CN1/CM-14			
1pc	1-953-888-11	o	HARNESS (CASSECON)
HARNESS (CTL):CN618/AH-40,28 board to CN310/SS board			
CN618W	1-569-195-11	o	HOUSING, 2P
2pcs	1-569-193-11	o	CONTACT, FEMALE, AWG24-30
CN310W	1-569-196-11	o	HOUSING, 3P
3pcs	1-569-193-11	o	CONTACT, FEMALE, AWG24-30
HARNESS (DRUM):CN604/DRUM MOTOR to CN113/MB board			
CN604W	1-580-938-11	o	HOUSING, 15P
15pcs	1-565-740-11	o	CONTACT, FEMALE
CN113W	1-569-208-11	o	HOUSING, 15P
15pcs	1-569-193-11	o	CONTACT, FEMALE, AWG24-30
HARNESS (F-ERASE):CN131/MB board to CN619/FULL ERASE			
CN131	1-569-195-11	o	HOUSING, 2P
2pcs	1-569-193-11	o	CONTACT, FEMALE, AWG24-30
CN619	1-569-195-11	s	HOUSING, 2P
2pcs	1-569-193-11	o	CONTACT, FEMALE, AWG24-30
HARNESS (HN1):CN104/MB board to CN655/HN board			
1pc	1-953-891-12	o	HARNESS (HN1)
HARNESS (HN2):CN105/MB board to CN658/HN board			
1pc	1-953-892-12	o	HARNESS (HN2)
HARNESS (HP):CN102/KY board to CN103/HP board			
1pc	1-953-886-11	o	HARNESS (HP)

(HARNESSES)

Ref. No.
or Q'ty Part No. SP Description

HARNESS (LD-MOTOR):CN620/LD-35 board to CN112/MB board

1pc 1-953-889-11 o HARNESS (LD-MOTOR)

HARNESS(POWER SW):CN1002/MB board to CN1004/SW REG

CN1002 ⚠ 1-562-211-11 o HOUSING, 3P
2pcs ⚠ 1-562-210-11 o CONTACT, FEMALE AWG18-22

CN1004 ⚠ 1-562-211-11 o HOUSING, 3P
2pcs ⚠ 1-562-210-11 o CONTACT, FEMALE AWG18-22

S1001 ⚠ 1-570-117-41 s SWITCH, ROCKER (AC POWER)
1pc 2-269-962-11 o COVER, SWITCH

HARNESS (PTC):CN106/MB board to CN611/PTC board

1pc 1-953-893-11 o HARNESS (PTC)

HARNESS (REG):CN1003/MB board to CN1005/SW REG

CN1003 1-562-513-11 o HOUSING, 11P
11pcs 1-562-490-11 o CONTACT, FEMALE

CN1005 1-562-513-11 o HOUSING, 11P
11pcs 1-562-490-11 o CONTACT, FEMALE

HARNESS (S-REEL):CN115/MB board to CN693/S-REEL MOTOR

1pc 1-953-896-11 o HARNESS (S-REEL)

HARNESS (SE):CN123/MB board to CN601/SE board

1pc 1-953-887-11 o HARNESS (SE)

HARNESS (T-REEL):CN116/MB board to CN683/T-REEL MOTOR

1pc 1-953-890-11 o HARNESS (T-REEL)

16-4.PACKING MATERIALS & ACCESSORIES

Ref. No.
or Q'ty Part No. SP Description

1pc ⚠ 1-590-910-11 s CORD, AC POWER 3P(for EK)
1pc 3-187-182-01 o INDIVIDUAL CARTON(for SVO-5800P)
1pc 3-187-183-01 o INDIVIDUAL CARTON(for SVP-5600P)
1pc 3-186-414-01 o CUSHION (BOTTOM)
1pc 3-186-415-01 o CUSHION (TOP)

1pc 3-694-922-01 o SHEET, PROTECTION
1pc ⚠ 3-759-424-21 s MANUAL, INSTRUCTION (English/French)
1pc ⚠ 3-759-424-41 s MANUAL, INSTRUCTION (German/Italian)
1pc 3-759-425-22 s MANUAL, MENU CARD (English)
1pc 3-759-425-32 s MANUAL, MENU CARD (French)

1pc 3-759-425-41 s MANUAL, MENU CARD (German)
1pc 3-759-425-51 s MANUAL, MENU CARD (Italian)

16-5.OPTIONAL FIXTURES

Part No.	SP	Description
H-7099-035-H	o	TORQUE GAUGE ADAPTOR
H-7099-039-H	o	TORQUE GAUGE
J-6080-811-A	o	GUIDE HEIGHT ADJ. DRIVER
or		
J-6082-044-A	o	GUIDE HEIGHT ADJ. DRIVER
J-6080-840-A	o	SMALL MIRROR
J-6090-014-A	o	MOLYKOTE GREASE EM-30LG
or		
4-918-645-01	o	MOLYKOTE GREASE EM-30L
J-6380-040-A	o	RG REFERENCE PIN(1)
J-6380-050-A	o	RG REFERENCE PIN(2)
J-6380-080-A	o	REFERENCE PLATE
J-6380-090-A	o	REEL TABLE HEIGHT ADJ. TOOL
J-6380-550-A	o	MASTER BLOCK
J-6380-700-A	o	MASTER BLOCK
J-6380-710-A	o	X VALUE ADJUSTMENT TOOL
J-6381-370-A	o	RP EXTENSION TOOL
J-6381-380-A	o	S-BNC VIDEO CABLE
J-6381-900-A	o	Y/C DELAY ADJUSTMENT TOOL<NTSC>
J-6381-910-A	o	Y/C DELAY ADJUSTMENT TOOL<PAL>
J-6382-360-A	o	EXTENSION HARNESS
J-6382-450-A	o	EXTENSION BOARD, VH-245
J-6382-460-A	o	EXTENSION BOARD, VH-246
J-6382-470-A	o	EXTENSION BOARD, VH-247
J-6382-480-A	o	EXTENSION BOARD, VH-248
2-034-697-00	o	CLEANING CLOTH
7-700-736-05	o	L-SHAPED HEXAGONAL WRENCH(1.5mm)
7-700-736-06	o	L-SHAPED HEXAGONAL WRENCH(0.89mm)
7-700-751-02	o	BOX DRIVER(5.5mm)
8-192-602-12	o	ALIGNMENT TAPE, KRV-23<NTSC>
8-192-602-17	o	ALIGNMENT TAPE, KRV-23PS<PAL>
8-192-602-43	o	ALIGNMENT TAPE, KRV-5821NSA<NTSC>
8-192-602-48	o	ALIGNMENT TAPE, KRV-4821PSA<PAL>
8-192-603-11	o	ALIGNMENT TAPE, KRV-31NS<NTSC>
8-192-603-16	o	ALIGNMENT TAPE, KRV-31PS<PAL>
8-192-603-51	o	ALIGNMENT TAPE, KRV-35NF<NTSC>
8-192-603-56	o	ALIGNMENT TAPE, KRV-35PF<PAL>
8-192-603-61	o	ALIGNMENT TAPE, KRV-36NF<NTSC>
8-192-603-66	o	ALIGNMENT TAPE, KRV-36PF<PAL>
8-192-605-21	o	ALIGNMENT TAPE, KRV-51HN(S-VHS)<NTSC>
8-192-604-96	o	ALIGNMENT TAPE, KRV-45HPS(S-VHS)<PAL>
8-192-605-31	o	ALIGNMENT TAPE, KRV-51N(VHS)<NTSC>
8-192-604-16	o	ALIGNMENT TAPE, KRV-44PS<PAL>
8-896-024-94	o	BLANK TAPE, GR-120KG
9-911-053-00	o	THICKNESS GAUGE
9-919-573-01	o	CLEANING FLUID

COMMERCIALLY SOLD
TENTELOMETER, T2-H7-UMC
HEAD DEGAUSSER